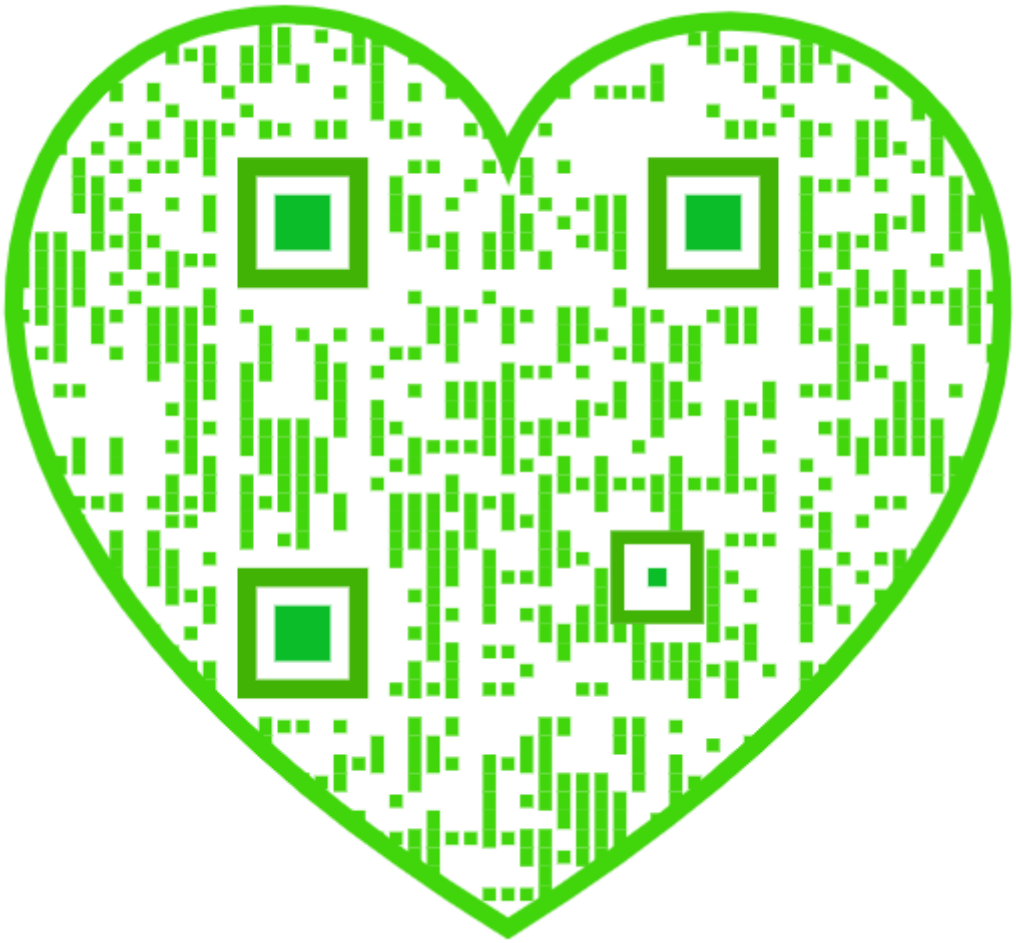

Ore Dressing

By

ROBERT H. RICHARDS, S.B.

Professor of Mining Engineering and Metallurgy at the Massachusetts Institute of Technology, Boston, Mass., U. S. A.

FIRST EDITION

IN TWO VOLUMES

VOL. II

New York and London

THE ENGINEERING AND MINING JOURNAL

1903

THE NEW YORK
PUBLIC LIBRARY
304136
ASTOR, LENOX AND
TILDEN FOUNDATIONS
R 1904 L

Copyright, 1903
by
THE ENGINEERING AND MINING JOURNAL

PREFACE TO VOLUME II.

THIS work was originally planned for one volume. Its size, however, makes it more desirable to publish it in two. Since these will appear simultaneously it has not been considered necessary to repeat in the second volume all the material which appears at the beginning of the first, with the exception of the "Key to Mill Numbers" to which the reader may need to refer constantly.

R. H. R.

TABLE I.

KEY TO MILL NUMBERS

Mill No.	Name.	Location.	Economic Minerals.	Gangue.	Capacity per 24 Hours. Tons.
1.	Genesee-Vanderbilt Mining Company.	Guston, Colorado.	Gold and silver bearing pyrite, galena, blende and a little polybasite.	Quartz, porphyry, barite and clay.	
2.	Granby Hand Jig.	Granby, Missouri.	Blende, calamine and galena in coarse crystallization.	Quartz, flint, calcite and dolomite.	8 (*a*)
3.	Hell upon Earth.	Joplin, Missouri.	Blende and galena in coarse crystallization.	Limestone and flint.	50 (*b*)
4.	Henninger's Limonite Washer.	Trexler Town, Pennsylvania.	Limonite		
5.	Limonite Washer.	Longdale, Virginia.	Limonite, of concretionary structure.	Clay and shale with sandstone and pebbles.	800
6.	Peace River Phosphate Company	Hull, Florida.	Phosphate.	Sand.	
7.	Land Pebble Phosphate Company.	Pebble, Florida.	Phosphate.	Hard blue clay.	
8.	Dunnellon Phosphate Company.	Dunellon, Florida.	Phosphate.	Sand, clay, etc.	400 (*c*)
9.	Henry Faust.	Galena, Kansas.	(*d*)	(*d*)	60–100 (*c*)
10.	I Know Mining Company.	Joplin, Missouri.	Blende and galena.	Flint and limestone.	100–120 (*c*)
11.	Alma Emmons Sludge Mill.	Galena, Kansas.	Unfinished blende ore.	Flint and limestone.	60 (*c*)
12.	Friedensville Zinc Company.	Friedensville, Pennsylvania.	Blende.	Limestone, quartz.	120–135 (*c*)
13.	Eustis Mining Company.	Eustis, P. Q., Canada.	Pyrite, chalcopyrite, arsenopyrite, enargite.	Quartz and mica schist.	(*e*)
14.	Nichols Chemical Company.	Capelton, P. Q., Canada.	Pyrite, chalcopyrite, and arsenopyrite.	Quartz and mica schist.	Variable.
15.	Kohinoor Mill, Empire Zinc Company.	Joplin, Missouri.	Blende.	Flint.	34 (*c*)
16. and 17.	Granby Mining and Smelting Company.	Granby, Missouri.	Blende, calamine, smithsonite, galena, cerrusite, pyromorphite and other oxidation products.	Flint and quartz; some dolomite and calcite.	60 (*c*)
18.	Minnie and A. Y. Mill.	Leadville, Colorado.	Argentiferous galena, pyrite, blende.	Quartz.	95
19.	Moyer Mill.	Leadville, Colorado.	Argentiferous galena, pyrite, blende.	Quartz.	200
20.	Old Jordan and Galena Mining Company.	Bingham, Utah.	Class I.: pyrite. Class II.: pyrite, galena, and blende.	Quartz, and decomposed porphyry.	175
21.	Silver Age Mill.	Idaho Springs, Colorado.	Pyrite, galena, gray copper, chalcopyrite and blende; carrying gold and silver.	Quartz and feldspar.	40–50
22.	Central Lead Company.	Flat River, St. Francois County, Missouri.	Galena, a little pyrite.	Limestone.	175

Mill No.	Name.	Location.	Economic Minerals.	Gangue.	Capacity per 24 Hours. Tons.
23.	Flat River Lead Company.	Flat River, Missouri.	Galena, a little pyrite.	Dolomite.	100
24	Mine la Motte.	Mine la Motte, Missouri.	Galena, a little pyrite.	Limestone with silica.	100 (*f*)
25.	St. Joseph Lead Company.	Bonne Terre, Missouri.	Galena, a little pyrite.	Dolomite.	900
26.	Bullion Beck and Champion Mining Company.	Eureka, Utah.	Galena, cerrusite, malachite, azurite, silver (as sulphide, chloride, arsenite and arseniate), gold, arsenite and arseniate of copper.	Quartz, limestone.	200
27.	Revenue Tunnel Mines Company.	Mt. Sneffles, Ouray, Colorado.	Argentiferous galena, tetrahedrite, pyrite, blende, chalcopyrite.	Quartz and porphyry.	120
28.	Smuggler Mining Company.	Aspen, Colorado.	Native silver, argentiferous galena, pyrite, argentiferous barite, blende and smithsonite.	Blue limestone and quarts.	100 (*c*)
29.	Ute and Ulay Mill.	Lake City, Colorado.	Pyrite, blende, chalcopyrite, tetrahedrite, and argentiferous galena.	Quartz.	350
30.	Bunker Hill and Sullivan Mining and Concentrating Company.	Kellogg, Idaho.	Argentiferous galena, pyrite.	Quartsite and siderite.	530
31.	Gem Mill of the Milwaukee Mining Company.	Gem, Idaho.	Argentiferous galena and blende.	Quartz.	200
32.	Helena and Frisco Mining Company.	Gem, Idaho.	I. Cerrusite and pyromorphite. II. Argentiferous galena, pyrite, chalcopyrite and blende.	I. Quartz and iron oxide. II. Quartz.	600
33.	Last Chance Mill.	Wardner, Idaho.	Argentiferous galena.	Quartz.	75
34.	Morning Mining Company.	Mullan, Idaho.	Argentiferous galena, pyrite and blende.	Siderite with some quarts.	300
35.	Union Mill of the Standard Mining Company.	Wallace, Idaho.	Argentiferous galena, pyrite and blende.	Slate and quartz.	250–300
36.	Stem Winder Mill.	Kellogg, Idaho.	Argentiferous galena.	Quartz.	75
37.	Buffalo Hump Mining Company. Tiger and Poorman Branch.	Burke, Idaho.	Argentiferous galena and blende.	Quartz.	550
38.	Boston and Montana Consolidated Copper and Silver Mining Company.	Great Falls, Montana.	Chalcopyrite, pyrite, enargite, and bornite.	Quartz and decomposed feldspar.	(*g*)
39.	Butte and Boston Mining Company.	Butte, Montana.	Bornite, chalcopyrite, enargite, pyrite, blende with some silver minerals.	Quartz and decomposed feldspar.	500
40.	Colorado Smelting and Mining Company.	Butte, Montana.	Pyrite, blende, bornite, enargite, chalcopyrite, chalcocite, tetrahedrite and tennantite.	Quartz, decomposed granite, and barite.	(*h*)
41.	Parrot Silver and Copper Mining Company.	Butte, Montana.	Chalcocite, bornite, chalcopyrite, enargite and blende.	Quartz and decomposed feldspar.	300–350
42.	Anaconda Copper Mining Company.	Carroll, Montana.	Chalcocite, chalcopyrite, pyrite, enargite, blende.	Quartz and decomposed feldspar.	2500–2700

Mill No.	Name.	Location.	Economic Minerals.	Gangue.	Capacity per 24 Hours. Tons.
43.	Butte Reduction Works.	Butte, Montana.	Chalcocite, bornite, chalcopyrite, pyrite, blende.	Quartz and decomposed feldspar.	150
44.	Calumet and Hecla Mining Company.	Calumet, Michigan.	Native copper, native silver.	Rhyolite conglomerate with calcite, epidote and martite.	2640 (*s*)
45.	Franklin Mining Company.	Hancock, Michigan.	Native copper, native silver.	Soft amygdaloid rock.	450
46.	Osceola Consolidated Mining Company.	Houghton County, Michigan.	Native copper.	Amygdaloid, calcite, prehnite, magnetite.	1260
47.	Quincy Mining Company.	Hancock, Michigan.	Native copper.	Amygdaloid.	1700—1900
48.	Tamarack Mining Company.	Houghton County, Michigan.	Same as Mill 44.	Same as Mill 44.	1500
49.	New Smuggler Concentrator.	Aspen, Colorado.	Same as Mill 28.	Same as Mill 28.	125
50.	A Bartlett Mill.	Arizona.	Galena, chalcopyrite, blende.	Hornblende and quartz.	20 (*k*)
51.	(*l*)	Yreka, California.	Native gold.	Gravel.	(*m*)
52.	Kia Ora Gold Dredging Company.	Oroville, California.	Native gold.	Gravel.	(*n*)
53.	Hector Mining Company.	Telluride, Colorado.	Pyrite, chalcopyrite, tetrahedrite, galena and free gold.	White and blue quartz.	90
54.	Hornsilver Mining Company.	Frisco, Utah.	Native silver, argentite, cerargyrite, and cerrusite.	Quartz, calcite and siderite.	100
55.	Pandora Mill of Smuggler-Union Mining Company.	Telluride, Colorado.	Pyrite, chalcopyrite, galena, sphalerite, several arsenical silver minerals, occasionally native gold and silver.	Quartz, rhodocrosite, calcite and barite.	130 (*o*)
56.	Franklin Mining Company.	Placerville, California.	Native gold.	Conglomerate, with black sand.	60
57.	North Star Mining Company.	Grass Valley, California.	Free gold, auriferous pyrites.	Quartz.	64
58.	Maryland Mining Company.	Grass Valley, California.	Free gold, auriferous pyrites.	Quartz and slate.	80
59.	Empire Mill.	Grass Valley, California.	Native gold, auriferous pyrites.	Quartz and slate.	60
60.	W. Y. O. D. Mill	Grass Valley, California.	Native gold, auriferous pyrites.	Quartz and slate.	34
61.	Taylor Mine of Idlewild Gold Mining Company.	Greenwood, California.	Native gold, auriferous pyrites.	Quartz and slate.	115–128
62.	Grand Victory Mining Company.	Placerville, California.	Native gold, auriferous pyrites.	Quartz and trap-like rock.	100–150
63.	Bay State Mining Company.	Cosumnes River, California.	Native gold and auriferous pyrite.	Quartz in slate.	20
64.	Wildman Gold Mining Company.	Sutter Creek, California.	Native gold and auriferous pyrite.	Quartz, or quartz in slate.	93 (*p*)

Mill No.	Name.	Location.	Economic Minerals.	Gangue.	Capacity per 24 Hours. Tons.
65.	Madison Mill of the Utica Company.	Angel's Camp, Calaveras County, California.	Native gold and auriferous pyrite.	Soft slate with quartz.	135 (*q*)
66.	Homestake Mining Company.	Lead City, South Dakota.	Native gold and auriferous pyrite and arsenopyrite.	Quartz in mica schist.	400
67.	West Waverly Gold Mining Company, Limited.	Waverly, Nova Scotia.	Native gold and arsenopyrite, galena, pyrite, chalcopyrite, sphalerite.	Quartz.	50–65
68.	Montana Mining Company, Limited.	Marysville, Montana.	Native gold, tetrahedrite, pyrite, chalcopyrite, blende, galena, arsenical polybasite, argentite.	Quartz, slate, granite, calcite, manganese oxide.	105
69.	American Developing and Mining Company.	Gibbonsville, Idaho.	Auriferous pyrites, argentiferous chalcopyrite.	Slate, quartz, calcite, hematite.	97–112
70.	Newton Gold Mill.	Idaho Springs, Colorado.	Auriferous pyrites and native gold.	Quartz	.....
71.	Kennedy Mining and Milling Company.	Jackson, Amador County, California.	Native gold and auriferous pyrites.	Quartz and slate.	96 (*r*)
2.	Keystone Consolidated Mining Company.	Amador City, California.	Native gold and auriferous pyrite.	Quartz in slate, or quartz.	120
73.	Utica Mill of the Utica Company.	Angel's Camp, Calaveras County, California.	Native gold and auriferous pyrites.	Quartz in slate	210 (*s*)
74.	Stickles Mill of the Utica Company.	Angel's Camp, Calaveras County, California.	(*t*)	(*t*)	210
75.	Zeile Mining Company.	Jackson, Amador County, California.	Native gold and auriferous pyrites.	Quartz, with slate and talcose slate.	150
76.	Gentle Annie Mill.	Placerville. California.	Native gold and auriferous pyrites.	Quartz in slate.	15–25
77.	Hidden Treasure Mill.	Black Hawk, Gilpin County, Colorado.	Gold and silver-bearing minerals (pyrite, chalcopyrite, blende, tetrahedrite, arsenopyrite, galena.)	Quartz and feldspathic material, calcite, siderite.	85
78.	Gates Canvas Plant of Kennedy Mining and Milling Company.	Jackson, Amador County, California.	(*u*)	(*u*)	100
79.	Keystone Consolidated Mining Company.	Amador City, California.	(*v*)	(*v*)	119
80.	Utica-Stickles Canvas Plant.	Angel's Camp, Calaveras County, California.	(*w*)	(*w*)	410
81.	Stephen Lavagnino's Arrastras.	Angel's Camp, California.	(*x*)	(*x*)	18–20
82.	Montana Mining Company, Limited.	Marysville, Montana.	Like Mill 68.	Like Mill 68.	110
83.	Eureka Hill Mining Company.	Eureka, Tintic District, Utah.	Native silver, cerargyrite, galena, cerrusite, anglesite, malachite, azurite, chrysocolla, arsenite and arseniate of copper.	Quartz, calcite, siderite and rhodocrosite.	120
84.	Mammoth Mining Company.	Mammoth, Tintic District, Utah.	Native silver, cerargyrite, argentiferous barite, malachite, arsenite and arseniate of copper.	Quartz and calcite.	100
85.	Newton Jigging Mill.	Idaho Springs, Colorado.	Like Mill 70.	Like Mill 70.	

Mill No.	Name.	Location.	Economic Minerals.	Gangue.	Capacity per 24 Hours. Tons.
86.	Rocky Mountain Mill.	Black Hawk, Gilpin County, Colorado.	Gold and silver bearing pyrite, chalcopyrite, blende, and galena.	Quartz and disintegrated granite.	75
87.	North Star on Sultan Mill, Silverton Mining Company.	Silverton, Colorado.	Native gold, pyrite, chalcopyrite, galena, tetrahedrite, bornite, stibnite.	Quartz, calcite, rhodochrosite and barite.	125
88.	Victoria Mill.	Silverton, Colorado.	Galena, chalcopyrite, pyrite and tetrahedrite.	Quartz and "porphyry" (quartz andesite).	75
89.	Hartzell Concentrating Company.	Alburtis, Pennsylvania.	Magnetite.	Siliceous with no phosphorus or sulphur.	125 (*c*)
90.	New Jersey Iron Mining Company.	Port Oram, New Jersey.	Magnetite.	Quartz with some apatite.	
91.	Edison Magnetic Concentrating Plant, New Jersey and Pennsylvania Concentrating Company.	Edison, New Jersey.	Magnetite.	Feldspar with a little quartz and apatite.	4000 (*y*)
92.	Wetherill Magnetic Concentrating Plant, Sterling Iron and Zinc Company.	Franklin Furnace, New Jersey.	Franklinite, willemite, fowlerite, zincite, tephroite.	Quartz, calcite, garnet, mica, graphite.	200 (*z*)
93.	Wythe Lead and Zinc Mine Company.	Austinville, Virginia.	Limonite, smithsonite, willemite, cerrusite.	Dolomite and quartz.	80 (*c*)
94.	Leadville Gold and Silver Extraction Company.	Leadville, Colorado.	Native gold and cerrusite.	Gray porphyry with kaolin.	75

(*a*) Probably in 10 hours. (*b*) In 9 hours. (*c*) In 10 hours. (*d*) Similar to, but richer than in Mill 10. (*e*) Rock house, 60 tons in 10 hours; mill, 50 tons in 10 hours. (*f*) In 22 hours. (*g*) Capacity of each roll section, 300 tons in 24 hours; of steam stamp section, 250 tons in 24 hours. (*h*) 275 to 300 tons per 24 hours for the section treating ore from the company mine, and 125 to 150 for the section treating custom ores. (*i*) For each of the two mills. (*k*) In 11 hours. (*l*) A gold dredging plant. (*m*) Theoretical, 2,000 cubic yards in 24 hours; actual 1,600 or less. (*n*) Theoretical, 2,500 cubic yards per 24 hours; average, less than half this amount. (*o*) Since increased to 200. (*p*) Since enlarged to 145 tons. (*q*) Since changed to about 200 tons. (*r*) Since enlarged to about 135 tons. (*s*) Since changed to 300 tons. (*t*) Similar to Mill 73. (*u*) The mill treats the tailings of Mill 71. (*v*) The mill treats the tailings of Mill 72. (*w*) The mill treats the tailings of Mills 73 and 74. (*x*) Material is tailings from Mill 80. (*y*) In 20 hours. (*z*) A second mill erected by this company has a capacity of 1,400 tons in 20 hours.

PART II.

Continued from Vol. I.

SEPARATING, CONCENTRATING OR WASHING.

CHAPTER XVI.

FINE SAND AND SLIME CONCENTRATORS.

§ 479. Concentrators for fine sands and slimes may be classified according to the following principles of action:

A. *Vanners* use mechanical agitation on a shaking surface to separate the pulp into layers, with the specifically heavier minerals beneath the lighter; accompanied by the dragging action of a belt, to take off the heavy minerals at one end, and the current of surface water to remove the light minerals at the other end.

B. *Bumping and jerking tables* use mechanical agitation on a jerking surface, to separate the pulp into layers with the heavy minerals below the light; while the jerking action conveys the heavy minerals to one end or side of the table, and the current of surface water conveys the light minerals to another end or side.

C. *Film-sizing tables* use the relative transporting power of a film of water, flowing on a quiet inclined surface, to act upon a sorted product. The smaller grains, of higher specific gravity, are moved down the slope slowly or not at all, since they are in the lower slow current; while the larger grains, of lower specific gravity, are moved rapidly down the slope, since they project up into the upper rapid current. This action separates the waste from the values.

D. *Riffles* utilize the agitation of a water current flowing over their uneven surface, and have catch pockets for holding the heavier particles.

E. *Kieves* use mechanical agitation in a deep mass of thick pulp, to separate the particles of higher specific gravity from those of lower.

In concentrators of almost all descriptions the depth of the bed used seems to be of great importance. If too thick the work may be paralyzed, if too thin the capacity may be cut down. The thickness of the bed may be defined by the number of grains of maximum diameter, one above another, that would be equal to the thickness of the bed. On this basis a bed is spoken of as so many grains thick or deep. The above mentioned classes of sand and slime concentrators may be rated as follows: On vanners the bed may be 10 grains deep without complicating the work too much; on bumping tables the author believes the bed should be, if anything, slightly less deep than on vanners; on film-sizing tables the grains must receive individual treatment, and therefore the bed ought to be only one grain deep; in riffles the bed may be several hundred grains deep and still good work result; and in kieves the bed may be several thousand grains deep and still yield good results.

A. VANNERS.

A vanner does its work on the upper surface of an endless belt, which is slightly inclined from the horizontal and receives a rapid shake in the plane of the belt, while at the same time it has a continuous, slow motion up the slope. The agitation makes the ore bed so loose that minerals of higher specific gravity can settle to the lower layer, while those of lower specific gravity rise to the upper

layer. The travel of the belt carries the heavy mineral to the upper end, and the surface water washes down the light mineral to the lower or tail end.

There are two chief classes of vanners, and a third class which has been recently introduced:

I. The side-shake, which vibrate at right angles to the direction in which the belt travels.

II. The end-shake, which vibrate parallel to the direction in which the belt travels.

III. Gyrating.

The data on all kinds of vanners, as obtained from the mills, are given in Table 314.

I. SIDE-SHAKE VANNERS.

§ 480. THE FRUE VANNER (Fig. 381) has a main frame *G*, resting upon four posts *3*, which are mortised into two heavy cross sills. Wedges *12* are provided to take up the slack between the posts and the main frame. This frame consists of two longitudinal timbers *G* and three cross timbers *X* bolted together. Its slope can be varied from nothing up to 8 inches or more in 12 feet, by means of wedges *13* (or jack screws acting at the same points). It has eight toggle blocks *b* for supporting the shaking frame. These blocks have sockets supplied with rubber cushions in the bottom for supporting the toggles *N*, and the blocks have slots which allow them to slide in or out on their supporting bolts a total distance of about 2 inches, for the adjustment discussed at the end of § 487. On each end of the middle cross timber is a lug *14*, to which is attached the longitudinal guide bolt *V* connecting with the shaking frame. The boxes *XXX* for the crank shaft *H* are bolted to the prolongation of the cross timbers, and they have slotted bolt holes which allow them to be moved toward or away from the belt. The hanger *S* for the worm wheel *L* is bolted to the upper end of one of the longitudinal timbers *G*.

The shaking frame *F* consists of two longitudinal timbers into which five cross timbers are notched, and all are held together by five cross bolts. Bolted to each side there are four toggle blocks *d*, which serve to support the frame upon the toggles *N*. The boxes for the two end rollers are attached to the ends of the longitudinal timbers, with bolt slots to allow for adjustment in and out, and set screws for this adjustment. These set screws are used to square the rollers, and to some extent to take up any slack in the belt. They may also be used, on the lower end roller, to guide the belt, bearing in mind that the latter always runs toward its loosened side. The dipping roller *B* is hung from long hangers *P*, the tightening roller *C* on short ones. In order to withstand the shake of the frame, each pair of hangers is braced by two diagonal rods connecting the two hangers and having lock nuts on each end. The chief means of guiding, as well as of tightening, the belt consists of the hand screws *16*, which control the position of the roller *C*. To guide the belt toward either side of the machine the end of *C* that is on that side should be moved toward the head of the machine. The tightening roller is shorter than the others and has rounded edges to save the belt flange. At *17* are the lugs by which the guide rods *V* connect the shaking frame to the main frame. These guide rods have lock nuts at both ends to square the whole shaking frame and to give it longitudinal stability. The bolts that hold the lugs *17* are the same that hold the toggle blocks at the tail end of the shaking frame and also the boxes for the large tail roller. Similarly, the bolts that hold the toggle blocks at the head end of the shaking frame also hold the boxes for the large head roller. Twelve small rollers *D* are mounted upon the shaking frame to support the belt. They are spaced 12 inches apart, except

the four upper rollers, which are set closer in order to make a smoother plane where the final cleaning is done. The boxes in which these little rollers run are adjustable in and out, in order to allow the rollers to run easily without rattling. All the rollers, both large and small, are made of galvanized iron. The *concentrating plane* is that portion of the belt surface that is tangent to the tail roller and the ten little rollers above it. The *cleaning plane* is that portion of the belt surface that is tangent to the head roller and the three little rollers below it, and with a smooth belt it has a slope that is steeper than that of the concentrating plane by ½ inch in its length of 25 inches, due to the fact that the head roller is elevated ½ inch above the concentrating plane. With a corrugated belt the head roller is elevated ¾ inch above the concentrating plane. The feed distributor *1* is fastened to the shaking frame by means of slotted bolt holes, so that its height and slope can be adjusted. It has a copper amalgam box or trap *18*, distributing blocks *19*, and on its lip a sheet iron gutter *20* punched with ¼-inch holes 1 inch apart. This distributor spreads the pulp evenly across the belt, and the copper box serves to catch amalgam when the pulp comes from amalgamated plates. The cast iron wash water distributor *2*, which stands upon the main frame, is provided with little brass spouts 1½ inches apart. It can be leveled by lock nuts on its two supporting posts, and the quantity of water fed to it from the pipe *6* is regulated by the cock *5*. With a corrugated belt the wash water has a little greater drop than with a smooth belt, and is applied from two rows of spouts, alternately longer and shorter.

The main shaft *H* is supported upon the three boxes *X*, and receives power through the pulley *I*. It transmits a sidewise shaking motion to the shaking frame *F*, through the cranks *O*, the connecting rods *R* and the fastening bolts *T*, the total throw being 1 inch. It also transmits power, by the cone pulley *J*, the worm shaft *K*, the worm *Z*, the worm wheel *L*, the crank *21* and the spiral spring connecting rod *M*, to the head roller A_1, which causes the travel of the belt. As it is necessary that the speed of the belt may vary, the hand screw *m* can move the flanged pulley *W* on a spline from the large to the small end of the cone *J* to suit all demands of speed. The shaft *K* is suspended by the hanger *Y*. The latter can be revolved upon its supporting axis, by means of the hand stop-screw *a*, sufficiently to raise the pulley *W* off from its little driving belt. By this means the travel of the vanner belt may be stopped while the shaking motion continues.

When a vanner is started it should be examined to see that all the bolts and wedges are tight, that the little rollers are lined up to true the concentrating plane, and the large rollers adjusted to prevent excessive bagging of the belt between the little rollers. The machine being in motion, the proper quantity of water is turned on through the water distributor *2*, and pulp of the right consistency is fed through the pulp distributor *1*. Starting from the tail roller A_2 (Fig. 381), the endless belt moves slowly up over the little rollers of the concentrating plane, receiving its pulp from *1;* then passes up over the rollers of the cleaning plane, under the water-distributor *2*, over the head roller A_1 and down into the tank *4*, where the belt is immersed by the roller *B* to remove the adhering concentrates. It receives a final cleansing from the spray pipes *22* and *23*, and then passes over the tightening roller *C*, and returns beneath the tail roller A_2 to repeat these operations. The tailings are carried down the slope of the belt by the water current, and discharged to the apron *24* and the waste trough *8*. The wash water, the quantity of which should be kept at a minimum, is used to remove the last of the quartz from the heads; and it also keeps the ore bed on the cleaning plane thoroughly wetted. If points or fingers of ore form, with crests uncovered by water, ore will float off by greasy flotation and pass into the tailings.

The concentrates may collect in the tanks and either be hoed out or may run out continuously through small spigots. In either case there will be an overflow, which goes to settling boxes to save the fines. In Mill 40 there were two ¼-inch spigots in the bottom of each tank, and these left a small amount of water to overflow. More recently this mill has adopted a new method, which does away with the tank. The whole vanner is raised one or two feet higher than usual, the dipping roller brought considerably forward, and an apron placed beneath and parallel to the belt where the latter passes from the dipping to the tightening roller. The concentrates, removed from the belt by inside and outside spray pipes, run down the apron into a launder that extends along the whole row of vanners at their head ends.

An automatic sulphuret discharge roll is used in Mills 41 and 73. This roll (*s*, Fig. 384*a*), is placed on the outside of the belt directly beneath the head roller, and takes most of the sulphurets off the belt, delivering them nearly dry in a box, on a board or on the floor in front of the heads tank, leaving them more accessible and in better condition for shoveling than by the usual method. The belt then dips into the usual tank to remove the little remaining concentrates.

§ 481. *The belt* is of two-ply rubber (about 0.175 inch thick) and has flanges on the edges to confine the ore and water. The width is either 4 or 6 feet. The

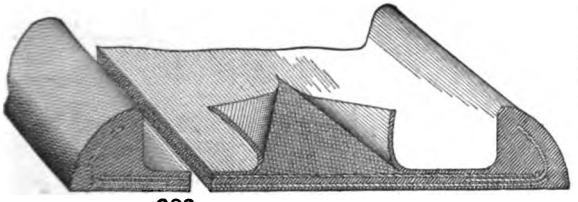

FIG. 382.—LORING VANNER BELT.

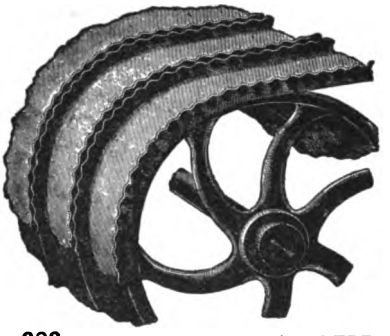

FIG. 383.—WOODBURY VANNER BELT.

length of the concentrating and cleaning surface is 12 feet. The original Frue belt has an erect flange 1⅛ inches high. This flange is made of high grade, very elastic rubber, which stretches in passing over the end rollers, returning to its normal form after passing them. The Loring belt (Fig. 382) has a very thick flange of soft, high grade rubber. It is vertical on the inner side and rounds down on the outer to a thickness greater than its height. It has in it a layer of duck which helps it to maintain its shape. At Mills 65, 73 and 74 this is preferred to all others. The Woodbury belt (Fig. 383) has a crimped flange, which simply straightens on going over the rollers, with less stretching than the other forms. The Blasdel belt has a flange which leans inward at a slope of about 60°. As this goes over the end roller it partially lies down inward, and therefore does not stretch excessively. At Mill 57 this is preferred to all others. The Brownell flange is erect, like the Frue, but is folded over outward upon itself. In passing over the end roller it flattens outwardly, and so partly avoids the stretching. This is preferred to others at Mill 59. The Summerhayes flange is hollow or tubular. The inner wall stands vertical, the outer bows outward. This flange flattens and inclines outward during its passage over the end rollers. For the practice in the use of flanges see Table 314.

The belt generally has a smooth surface, but corrugated belts (originated by F. B. Morse) are also used. The latter have V-shaped grooves running across

TABLE 314.—ADJUSTMENT, FEED AND CAPACITY OF MILL VANNERS.

Abbreviations.—In.=Inches; R.=round holes in stamp screens; Sq.=square holes in stamp screens.

Mill Number.	Kind of Vanner.	Belt. Kind.	Belt. Width.	Belt. Life in Months.	Slope. Inches in 12 Feet.	Slope. Degrees.	Travel of Belt. Inches per Minute.	Number of Vibrations per Minute.	Feed. Source.	Feed. Maximum Size. (a')	Tons Treated by one Vanner in 24 Hours.
			Feet.				In.			Mm.	
18	Frue	Frue	4		6-7⅛	2° 25′-2° 50′	65⅛	205-210	(e)		
19	Frue	(b′)	4						(e)		
20	Frue	Frue		24-36	5	2° 0′		190	(r)		
24	Frue	Frue	4	12				190	(r)		
26	Frue	Blasdel	6	24-60	2	0° 50′	24-36	198	(c)		4-6
	Johnston		6		3	1° 12′	55	116	(r)		4-6
27	Woodbury g′	Woodbury	5		4.4	1° 45′		230	(b)		
					6.1	2° 25′					
					1¼	0° 35′	80				
	Woodbury g′	Woodbury	5		1.9	0° 45′	76	230	(w)		
					3.4	1° 20′	80				
	Woodbury g′	Woodbury	5		3.8	1° 30′	85	230	(k)		
30	Frue	(b′)							(w)		
31	Frue	Blasdel (b′)	4		4	1° 35′	26	200	(j)		
32	Frue	(b′)	4 & 6		3	1° 12′	36	200	(j)		
34	Frue	(b′)	4					190	(w)		
35	Frue		4	48	1⅛	0° 35′	(d′) 24	215	(e)		
36	Frue	(b′)	4						(m) or (w)		
	Frue	(b′)	4						(o)		
37	Frue		6						(p)		
38	Frue	Frue	4	54-60	3⅛	1° 20′	35-41	190-194	(w)		
39	Frue		4		1¼	0° 35′	46	186	(g)		
					4.8	1° 50′	51		(s)		
40	Frue	(b′)	4	60	3	1° 12′	36-48	204	(e)		
41	Frue		4								
	Tulloch	Canvas	5	6					(r)		
		Rubber		48							
	Embrey		4								
42	Frue	(b′)	4		3⅛	1° 25′	36-72	200	(w) (y) (f)		
53	Frue	Frue	4		3½	1° 25′	42	160	(a)	0.70 Sq.	7⅛
	Woodbury g′	Woodbury	5		3½	1° 25′	42	235			
54	Frue	Blasdel (b′)	6		4	1° 35′	35	200	(a)		16⅔
	Frue		6		3	1° 12′	30	200	(s)		8⅓
55	Frue	Smooth surface	4		4	1° 35′	30	200	(a)	1.10 Sq.	4⅛
	Triumph										
57	Triumph	Blasdel (c′)	4	(e′)	3	1° 12′	26	230	(a)	0.79 R.	4
	Frue	Blasdel (c′)	4		3⅛	0° 54′	24	200			
58	Frue	Frue	4	120	2.3-3⅛	0° 55′-1° 5′	28	200	(a)	0.59 Sq.	5
	Triumph	Blasdel (c′)	5		5¼	2° 5′	42-46	238			
59	Triumph	Triumph	4	24-30	3	1° 12′	26	200	(a)	0.64 R.	3⅝
		Brownell									
		Woodbury		36							
		Blasdel (c′)		30							
60	Frue	Blasdel (c′)	4		3⅛	1° 30′	45		(a)		4¼
		Woodbury			5⅛	2° 20′	60				
61	Woodbury g′	Woodbury	5	30	8.8	3° 30′	72	235	(a)	0.81 R.	15
	Woodbury h′										
62	Frue	Blasdel (b′)	4		3¼	1° 30′	45	206	(a)	0.75 R.	7⅛-10⅛
	Triumph	Blasdel (b′)	5		5.4	3° 10′	48	230			
63	Frue	Frue	4		5⅛	3° 15′	31	180	(a)		5
64	Frue	(b′)	4	48	3-5	1° 12′-3° 0′	36-72	190	(a)		7⅛
	Triumph	(b′)	4	48	2¼	1° 0′	36-48	230			
65	Frue	Blasdel (b′)	4		5¼	3° 5′	30.6	168	(a)	0.76 R.	12½
	Union	Blasdel (b′)	4		6¼	3° 35′	36	171			
66	Frue	Frue	4		3.6	1° 25′	33	196	(a)	0.83 Sq.	4.4
69	Frue	Frue	6						(a)		6⅝
71	Frue	Frue	4		3⅛	1° 20′	55	216	(a)		4
					4.2	1° 40′	62	206			
72	Woodbury g′	Woodbury	5		3½	1° 25′	50	230	(a) (d)		12
73	Frue	Loring	4	72	4¼-5¼	1° 47′-3° 5′	33-35	175-185	(a)	0.76 R.	12½
		Frue									
		Brownell									
		Blasdel									
74	Tulloch	Blasdel (c′)	3½		6¼	3° 35′	55	150	(a)	0.76 R.	12½
	Frue	Blasdel (c′)	4		5¼	3° 5′	28	186			
75	Frue		4	60	4½	1° 47′	37-42	198	(a)	1.13 Sq.	9⅜
76	Frue	(b′)	6						(r)		7⅛-12½
78	Gates	(b′)	4		18	7° 7′	85	224-240	(r)		
79	Woodbury	Woodbury							(r)		
82	Frue	Frue	4	60	3	1° 12′	26	190	(a)	0.52 Sq.	5⅛
83	Frue	Blasdel (b′)	6		3	1° 12′	24-36	200	(a)	0.42 Sq.	10
	Frue	Blasdel (b′)	6		3	1° 12′	30-36	200	(s) (a)	0.42 Sq.	7⅛
84	Frue	Blasdel (b′)	6		4	1° 35′	35	200	(a)	0.41 Sq.	12½
	Frue	Blasdel (b′)	6		3	1° 12′	18	200	(s)	0.41 Sq.	5⅜-6
88	Frue		4						(s)		
87	Woodbury g′	Woodbury	5		3⅛-4	0° 55′-2° 45′		200	(r)		
88	Woodbury g′	Woodbury	5		4.2	1° 40′	60	238	(r)		

Digitized by Google

(*a*) Gravity stamps. (*b*) Huntington mill. (*c*) Bryan mill. (*d*) Griffin mill. (*e*) Spigots of whole current classifier. (*f*) Separate spigots of whole current classifier. (*g*) Spigots of No. 1 whole current classifier. (*i*) Spigots of No. 2 whole current classifier. (*k*) Spigot of whole current classifier mixed with finest jig tailings. (*l*) Overflow of No. 2 whole current classifier mixed with slime table middlings. (*m*) First spigot of surface current classifier. (*o*) Second spigot of surface current classifier. (*p*) Second spigot of box classifier. (*r*) Overflow of hydraulic classifier. (*s*) Spigot of No. 2 hydraulic classifier. (*t*) Settlings from settling tank. (*v*) Carpet table tailings. (*w*) Slime table middlings. (*x*) Canvas table heads. (*y*) Tailings of finest jig. (*z*) Preceding vanners. (*a'*) These figures are the diameters of holes in the gravity stamp screens when new. As the screens wear the size of particles will increase slightly. (*b'*) Smooth surface. (*c'*) Corrugated surface. (*d'*) More or less. (*e'*) Some more than nine years, some less. (*g'*) With 7 belts. (*h'*) With 13 belts.

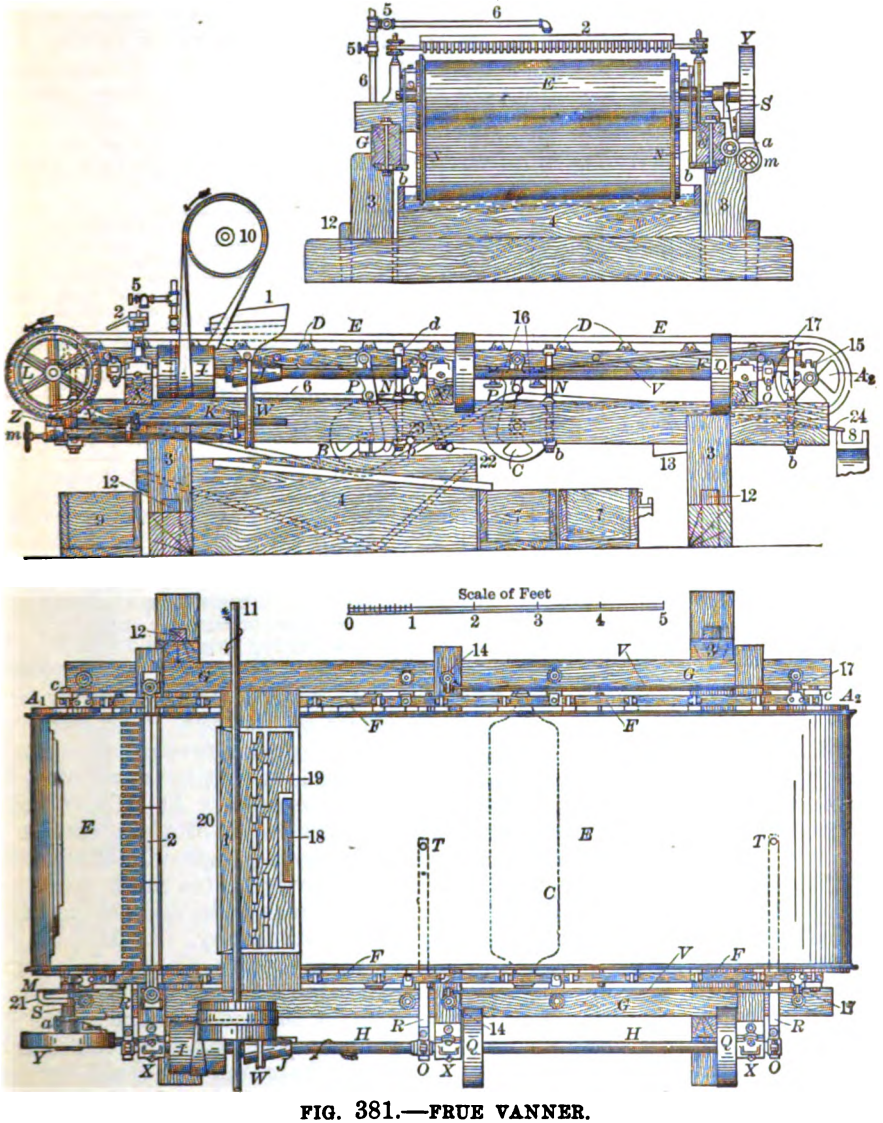

FIG. 381.—FRUE VANNER.

the belt, the sides of the V making a 60° angle. These grooves have been made as wide as $\frac{1}{8}$ inch, and as narrow as $\frac{1}{32}$ inch. They increase the catching power of the belt very greatly, yielding cleaner tailings; but they also unavoidably carry extra quartz into the heads. The finest sizes of corrugations appear to

be best adapted for securing the advantage of this device, with less tendency to carry up quartz into the heads. A plain belt and a corrugated belt running side by side were tested on a silver ore composed of blende, gray copper, pyrite, galena, chalcopyrite and ruby silver.[19] The ore was stamped through a 12-mesh screen and treated in a hydraulic classifier. The overflow went to a settling tank and the product from the spigot of the latter was divided in two equal parts and sent to the vanners. Each figure in Table 315 represents the total or average of several days' run, in most cases six days. The results of these tests show that the corrugated belt makes cleaner tailings, often halving their silver contents, but that it throws more quartz into the heads. Less attention was given in these tests to getting the cleanest tailings, because they were sent to other concentrators to be treated again.

TABLE 315.—COMPARATIVE RESULTS WITH PLAIN AND WITH CORRUGATED VANNER BELTS.

Lot.	Percent of Sulphides in the Ore.	Silver in Battery Pulp. Ounces per Ton	Plain Belt.				Corrugated Belt.			
			Concentrates.			Tailings. Ounces of Silver per Ton	Concentrates.			Tailings. Ounces of Silver per Ton
			Weight Pounds	Ounces of Silver per Ton	Total Silver Contents.		Pounds	Ounces of Silver per Ton	Total Silver Contents.	
					Ounces				Ounces	
A	7.0	22.7	4,209	207.6	436.8	.....	5,500	174.1	478.7	.....
B	9.3	22.2	5,323	216.6	576.5	.....	6,656	184.0	612.4	.....
C	5.7	13.3	3,090	120.8	186.0	5.3	4,750	103.1	244.9	3.4
D	6.0	14.2	4,350	144.7	314.7	4.9	6,720	120.9	406.3	2.7
Totals and averages	.....	.....	16,962	178.5	1,514.0	.....	23,626	147.5	1,742.3	.....
E	12.6	52.3	6,750	262.9	887.4	13.0	9,220	212.9	981.6	7.6
F	11.6	28.3	3,300	170.7	289.4	17.0	5,770	132.7	382.9	7.9
G	14.5	45.0	4,530	215.0	487.1	8.2	7,270	199.5	725.0	6.5
H	14.2	52.5	3,910	288.8	564.6	15.1	4,960	250.4	621.0	13.4
Totals and averages	.....	.....	18,580	239.9	2,228.5	.....	27,220	199.2	2,710.5	.....
I	24.0	83.7	3,060	327.2	503.9	10.9	4,550	291.0	662.1	7

Modifications of the corrugated belt have been devised, using a narrow band of corrugations and a wide band of plain surface on the belt. This form has met with considerable favor. The corrugated spaces come forward periodically and sweep up grains of ore that a plain belt might lose. At the same time, the contamination of the heads by quartz is largely prevented. At Mill 58 bands of corrugations 4½ inches wide are interspaced with bands of plain surface 10 inches wide. The corrugations consist of 60° grooves ¼ inch wide alternating with others ⅛ inch wide. This belt was found to carry up too much sand. At Mill 74, a 1-inch band of 60° corrugations, each $\frac{1}{32}$ inch wide, and having bands of smooth belt 3 feet wide between them, proved satisfactory. At Mill 57, the same arrangement as the last, only differing in the width of the plain band, which was 2 feet, proved satisfactory. At Mill 60 3-inch bands of ⅛-inch corrugations alternate with 4-foot bands of plain surface. George Gates has designed a belt with a surface having many fine pits approaching coarse sand paper in roughness. It is applicable to both end-shake and side-shake vanners.

Mill 41 uses a canvas belt, which costs $7 against $120 for rubber, and lasts 6 months against 4 years for the rubber; that is, the rubber belt costs 17 times as much, but lasts only 8 times as long as the canvas. The author is unable to state the comparative effectiveness of treatment. The canvas probably holds the ore better than the smooth rubber, but it would depart more from a true plane in going over the little rollers than would the stiffer rubber belt. With

proper care, rubber belts generally last from three to five years, depending on the amount of idle time (see Table 314).

§ 482. MODIFICATIONS OF THE FRUE VANNER.—*The Union Iron Works* make a Frue vanner using four iron posts as the main frame (Fig. 384*a*), with an

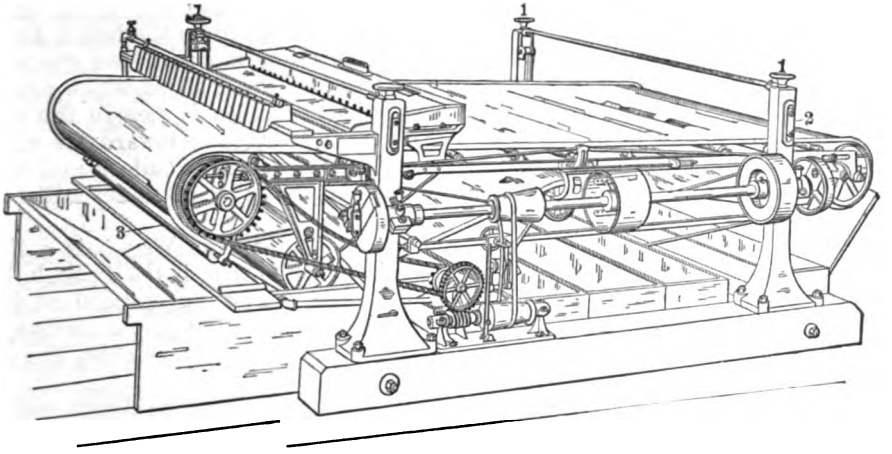

FIG. 384*a*.—UNION VANNER.

iron shaking frame and with two adjustable eccentrics, in place of fixed cranks, to allow of variation in the amount of throw. This puts one more adjustment under the control of the mill man. It is quite probable that a larger number of shorter strokes will be suitable for fine pulp, while fewer, longer strokes will suit coarse pulp. The forward motion of the belt is effected by cone speed pulleys and worm gear on the fixed frame, connected by chain and sprocket to the shaking frame. The latter is suspended on four links (Fig. 384*b*). The slope of the belt is adjusted by means of the hand screws *1*, and the clamps *2*. The main frame is fixed, the crank shaft being set at the average slope of the shaking frame. Any variations in the latter are taken up by the flexibility of the connecting rods.

FIG. 384*b*.—METHOD OF HANGING SHAKING FRAME ON UNION VANNER.

Iron frames are more durable than wood, but they do not take up the jar so well.

The Risdon Iron Works make a vanner with four iron posts for the main frame and an iron shaking frame; and a special device for giving the forward travel to the belt, consisting of speed cone pulleys and shipper, and a sprocket and chain, all upon the main frame, transmitting to a flexible shaft with two universal joints in it, and a worm gear, on the shaking frame, acting directly on the head roll. The shaking frame is supported upon four toggles, and the toggle blocks below are suspended from four rods with leveling screws. When the right level is gained the toggle blocks are clamped in place by nuts. It puts the dipping roller almost under the head roller, and uses two tightening rollers. The main frame is much the same as that of the Union Iron Works machine.

The Gates Iron Works make a device for driving the belt of a side-shake vanner, consisting of a crank on the shaft of the head roller driven by a corre-

sponding crank on the shaft of the worm wheel (L, Fig. 381), the two cranks having a sliding contact to provide for the side motion of the shaking frame.

The Colorado Iron Works drive the belt of a side-shake vanner by means of a link connection.

The Tulloch Concentrator is a side-shake vanner which has a rocking motion upon pivots below. The vertical rocking radius of the head end is 32 inches long, of the tail end is 30 inches long. This mechanism gives the belt a 1-inch horizontal movement in the center, and a 1¼-inch rising movement on one edge, with a corresponding falling movement on the other edge; all of which are reversed on the return movement. The effect of this motion is seen in the pulp bed, which is thickest in the middle of the belt, and thins out toward the edges, not quite reaching the flanges of the belt. Mill 74 has sixteen Tulloch and eight Frue vanners, and each vanner treats 12½ tons (dry weight) of stamp mill pulp in 24 hours.

The Johnston Concentrator, also made by the Risdon Iron Works, is a side-shake vanner with a rocking motion somewhat similar to that of the Tulloch, but obtained by very different mechanism. The shaking frame is suspended on four rods which slope inward and downward and which therefore give a horizontal motion to the center of the belt and a lifting motion to the rear edge, the rise probably being more gentle than on the Tulloch.

The Norbom Concentrator, made by the Joshua Hendy Machine Works, substitutes spring arms for the toggles of the Tulloch. Their supports can be moved inward to give a rocking motion analogous to that of a vessel's deck, or outward for a motion analogous to the swing of a hammock.

II. END-SHAKE VANNERS.

§ 483. THE TRIUMPH CONCENTRATOR.—This machine (Fig. 385) resembles the Frue vanner in many respects. The essential difference is in the direction of the shaking motion, which is endwise. It is made with an iron main frame

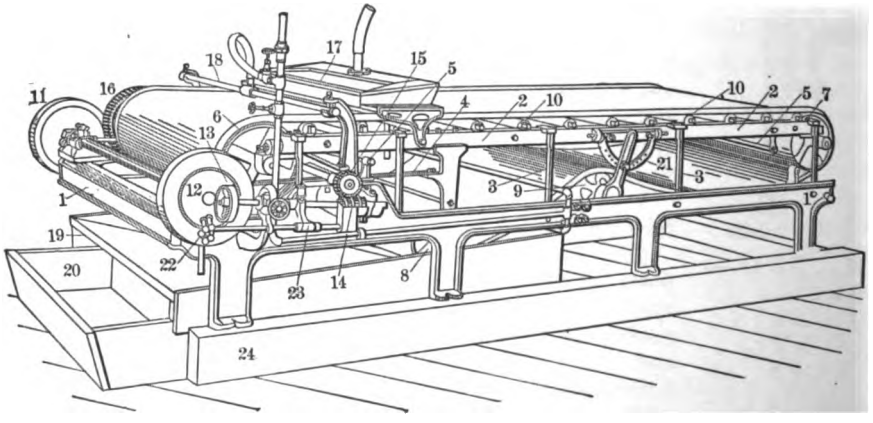

FIG. 385.—TRIUMPH VANNER.

1, which is fixed, and an iron shaking frame *2,* which oscillates endwise on ten wooden toggles *3.* It receives its shaking motion and endwise stability from two connecting rods *4,* and its sidewise stability from four rods *5.* It has a head roller *6,* tail roller *7,* dipping roller *8,* and tightening roller *9,* and twelve little supporting rollers *10.* The head roller is made slightly crowning in the center to keep the belt true. The power is received by a pulley *11,* and delivered

through cranks to the connecting rods *4*. The cranks make from 200 to 240 revolutions a minute. The belt travel is imparted by the friction disc *12*, and pulley *13*, the worm *14* and gear *15*, and pinion and gear *16*. It may be increased or decreased by moving the friction pulley *13* from or toward the center of the disc *12*. The little counter shaft for making this adjustment, simply slides in its boxes by the action of the hand-screw *22* and the arm *23*. The slope is varied by blocking up the sill *24* under the main frame *1*. The pulp distributor *17* is attached to the shaking frame, *2*, and the wash water distributor, *18*, to the main frame *1*. The heads tank *19* is raised and lowered with the main frame *1*. It is so constructed that the heads can be withdrawn by a hoe into a box *20* in front, from which they are shoveled to a wheelbarrow. The tightening roller *9* can be swung upon and bolted to the semicircular piece *21* in order to tighten the belt; and to guide the belt, the piece *21* can be moved a short distance toward the head or tail, by set screws. The belt moves toward that end of the tightening roller which is swung toward the head end of the machine. The feed, the operation and adjustments of the end-shake vanners are much the same as those of the Frue. Adjustments to get rid of side banks are not needed.

GEORGE GATES, of Jackson, California, has designed a modified Triumph vanner for finishing extremely fine material that has already been partially concentrated on a canvas table. In Mill 78 this vanner is 4 feet wide by 8 feet long. The little rollers are placed 6 inches apart and Gates thinks 4 inches would be better. The belt is quite loose, but is kept flat by the large number of little rollers. It has an adjustable end shake and uses $\frac{7}{16}$-inch throw. It makes 240 throws per minute for the coarser grade and 224 for the finer. The slope is $1\frac{1}{2}$ inches in 1 foot, equivalent to 18 inches in the 12-feet length of an ordinary vanner. The travel is 85 inches per minute. The reasons for these unusual adjustments are explained under the heading *travel, slope and pulp water*, § 487. Gates' rule is that the finer the pulp the greater should be the slope and travel, and the less the water. When fed with pulp assaying $30 per ton, it brings it up to $100, the tailings being treated on a special set of canvas tables. Both the feed jets and the wash water jets are 2 inches apart and in the same paths. This allows wide bands of concentrates to come up to the head of the machine without being disturbed after they have once settled on the belt.

THE EMBREY CONCENTRATOR is a belt vanner with an end shake. It is made in two forms, known as the four roller and the five roller patterns, with iron frames and with wooden frames respectively. The latter has the lightest shaking parts of any of the vanners, and will now be described. The main frame *G* (Fig. 386), is in halves, and consists of longitudinal caps, sills, posts and braces, with cross sills and bolts to hold the two halves together. On the inside of the caps are hung the six stirrups *b*, which are adjustable vertically and which support the lower ends of the six toggles *N*. For greater variation in slope than can be obtained by these stirrups, the main frame *G*, is wedged up or down. The shaking frame *F*, is of wood and has upon it a head roller *A'*, a tail roller *A*, and ten little rollers *D*. The distance from center to center between the head and tail rollers is 10.4 feet. Plumb under the head and tail rollers are two large rollers *B* and *B'*, which are supported on the main frame. The roller *B*, serves as a dipping roller to discharge concentrates and is also a tightening roller. The roller *B'* communicates the traveling motion to the belt, and also holds the end portion of the belt vertical. The true tightening roller is *C*, under the shaking frame, near its center and attached to one of the braces of the main frame. This construction gives the shaking frame less to carry, by two large rollers and their hangers, than any of the other designs. The power is applied by belt and pulley *I*, to the shaft *H* on the lower end of the machine, having

two fly-wheels *Q*, two eccentrics *O*, and connecting rods, *R*. The latter connect directly with the lower end of the shaking frame. The travel of the concentrating belt is obtained through the cone speed pulleys *J'J*, the bevel gears *P*, the worm shaft *K* and worm gear *L*, which is attached to the lower tail roller *B'*. Longitudinal stability is given by the connecting rods *R*, and lateral stability by cast iron standards, *a*, *a'* and *a''*. The shaft is given 200 to 220 revolutions

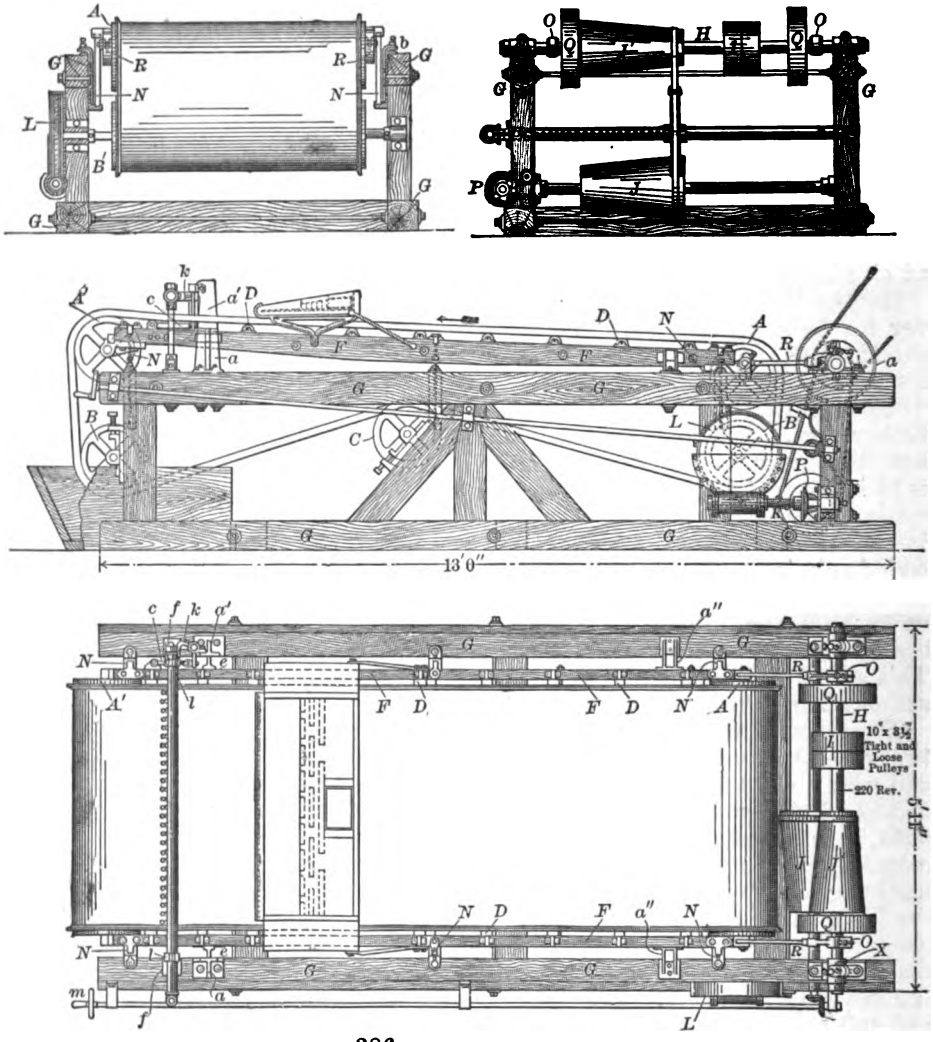

FIG. 386.—EMBREY VANNER.

with a throw of ¾ inch. The concentrating belt is 4 feet wide outside the flanges. The wash water is distributed by a pipe with many little spouts, and this pipe is given an oscillating motion across the belt by a bell crank *k*, which is connected to the shaking frame by the strap *c*. The inclination generally used is 3 inches in 10.4 feet.

WOODBURY VANNERS are made either with end-shake or with side-shake. The

end-shake will be here described. There are three important differences between this and the other end-shake vanners: First, several narrow belts are used instead of one wide belt; second, the concentrates that are settled upon the belt mostly pass up unmolested by the feed distributor. This is done by putting on the feed pulp in rows or files of holes, 7 holes to a file, which are lined up with the length of the belt, leaving wide spaces of the belt to travel up past the feed without having the settled ore particles molested by it; and third, the flanges on the edges of the belt are crimped, thus causing almost no stretch in the rubber while going over the rollers. The machine has a main frame of iron, standing upon wooden sills. Ten wooden toggles stand upon the main frame, and upon these the iron shaking frame is carried. The latter carries a head roller, tail roller, dipping roller, tightening roller and eleven little rollers. Its lateral stability is obtained by four transverse bolts connecting it with the main frame. Its longitudinal stability is provided by the connecting rods which, being driven from the shaft at the head end, cause the vibration of the shaking frame. The eccentrics to which these connecting rods are attached are adjustable from no throw to a throw of 2 inches. The revolutions recommended by the maker are 175 per minute, with a throw of 1 inch or 1⅛ inches; but the revolutions found in the mills are generally 220 to 235 per minute (see Table 314), with presumably less throw than just mentioned. The belt travel is obtained by cone pulleys and belt, driving a little countershaft on which is an eccentric revolving inside a gear-wheel. This gear-wheel is prevented from revolving by a radial arm attached to it and running in guides in order to allow the gear to gyrate. As the gear gyrates it meshes with an annular gear surrounding it, the number of teeth in which varies by one from the driving gear, and consequently it advances one tooth for every gyration of the driving gear. The slope is varied by wedging the head end of the main frame. The machine has four, seven or thirteen belts. The thirteen belt machine has belts 5 inches wide and one file of feed holes to a belt; the seven belt machine has belts 9 inches wide, two files of feed holes to a belt; and the four belt machine has belts about 13½ inches wide and three files of holes to a belt. Each of these files of holes is fed by its own trough; and the troughs radiate from a center, and have over them a revolving distributing bowl (see Fig. 387). In this way the troughs all receive a like quantity of similar pulp.

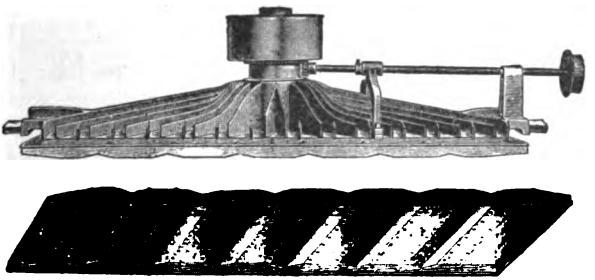

FIG. 387.—FEEDER FOR WOODBURY VANNER.

§ 484. COMPARISON OF SIDE-SHAKE AND END-SHAKE VANNERS.—There is a general feeling among California mill men that the side-shake is better for coarse slimes and the end-shake is better for fine slimes. The following opinions are quoted from mill managers and manufacturers. The end-shake principle is preferred by Mill 59 for ordinary stamp pulp; and by Mill 57 because it may be given higher rate of vibrations. Mill 53 finds that less of the finest slimes are lost in ordinary stamp pulp by the end-shake than by the side-shake machine. Mills 78 and 79 find the end-shake far preferable to the side-shake for very fine canvas table concentrates. The side-shake principle is preferred for ordinary stamp pulp by Fraser & Chalmers, Union Iron Works and Mill 26; and Mill 58 found its side-shake vanners mechanically better made than its end-shake. Adams[1] finds that while the end-shake vanner can make very clean

tailings, it at the same time throws more quartz into the heads than does the side-shake; and that, if sufficient water is used to prevent this, concentrates are lost in the tailings.

There is a marked difference between the manner in which the concentrates are carried up past the pulp distributors on the two styles of machines. The side-shake vanner has a pulp distributor with ¼-inch holes 1 inch apart, from which streams of pulp fall upon the belt. The side shake causes these streams to waggle so much that they more or less disturb the concentrates as the latter pass the distributor. The fine grains so disturbed get into the quick water and are carried down the belt to settle again, and try once more to run the gauntlet of the pulp distributor; though the coarse grains easily pass up the first time. On the other hand, the end-shake vanners give an endwise waggle to the pulp streams, so that the concentrates are less disturbed when passing up by the distributor. On the Woodbury machine this advantage is increased by placing the feed holes in several single files parallel to the length of the belt, with quite wide spaces between the files, for the fines to pass up unmolested, instead of in a single rank across the belt with but little space between the holes. Adams[1] takes issue with this saving by the end-shake vanner by saying that it carries too much quartz into the heads. The reason for this is that the jets of cleaning water tend to flow down in gutters and the concentrates to come up in little banks, from which the last of the quartz is less easily removed than with the side-shake.

Another disadvantage of the side-shake machines is the formation of banks and gutters at the edges of the belt, in which the separation cannot take place as well as in the middle. These banks are due to the fact that, as the belt flange moves inward, it momentarily compacts the ore near it, and only partially thins it on the return stroke. This may be largely overcome by running the vanner with a thin bed (from 0.15 to 0.20 inch thick over the little rollers). The end-shake vanner almost entirely avoids the formation of banks and gutters, and so the treatment at the edges is almost exactly the same as in the middle. The relative losses at the sides and at the center of a Frue vanner have been tested in Mill 40, where samples taken for a period of twelve hours yielded:

	Middl .	Edges.
Silver, ounces per ton.....	1.20	2.00
Copper, percent.....	1.05	1.35

The Tulloch vanner with its tilting side-shake, has wholly done away with the edge banks, but it has a much quicker current on the edges than in the center, and samples show more sulphurets at the edges than at the center. This tendency to form rich edge banks is an important feature in comparing vanners. Other things being equal, the vanner that has the least edge enrichment would seem to be the better machine. The author has no data in this direction for end-shake vanners.

The side-shake vanner shakes its sixteen rollers (twelve small and four large rollers) endwise, and in so doing throws the whole weight of the rollers against their boxes, tending to move the latter and produce a back-lash, which once established makes a bump at every throw of the machine and forms a bank of sand on one side of the belt. The end-shake vanner has no such cumulative effect, and hence the annoyance of bumps is much less liable to occur, and of banks still less, the two connecting rods and eccentric straps being the only points at which a bump can occur.

Both practical experience and theoretical considerations point clearly to the conclusion that the end-shake principle is better than the side-shake for very

fine pulp. For coarse pulp, the summing up of the evidence seems to prove that if clean heads are desired the side-shake vanner must be used; but if the cleanest tailings are sought, even at the expense of a little extra quartz thrown into the heads, the end-shake vanner should be used.

III. GYRATING VANNERS.

§ 485. Gyrating vanners receive, upon all parts of the belt, a motion that would be circular but for the travel of the belt. The two motions combined give a path like Fig. 388.

THE ELLIS CONCENTRATOR gives a gyratory motion to the shaking frame, which is supported on four universal toggles. The motion is imparted by heavy, vertical shafts carrying eccentrics on their upper ends, the straps of which are bolted directly to the shaking frame. These eccentrics are made synchronous by gear transmission. The batea belt, which has disc-like pits distributed over its surface, acting in much the same way as a batea, is designed to make use of this gyratory motion.

SNYDER uses a gyratory vanner shaken by an unbalanced high-speed fly-wheel. The machine is prevented from shaking itself to pieces by making the

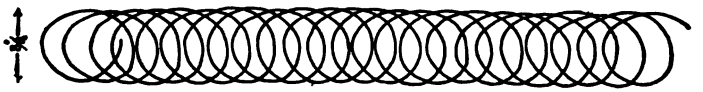

FIG. 388.—INDICATOR CARD FROM SNYDER VANNER.

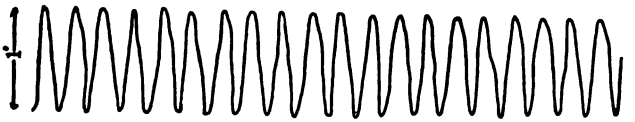

FIG. 389.—INDICATOR CARD FROM FRUE VANNER.

frame light and supporting it on six round steel rods, the lower ends of which are set into cups fastened to the floor. Hangers on the wooden frame carry two rods that extend across the machine beneath the belt. These rods support an X frame, which carries a pulley and unbalanced weight on a short, vertical shaft. This pulley is driven by a 2-inch belt that passes over guide pulleys on the side of the frame, and to an overhead driving pulley. In practice it has been found desirable to use a gyration of about ¾ inch and a speed of about 225 shakes a minute. No jar is transmitted to the floor, and there is no racking of the frame. The belt travel is obtained from a Challenge feed clutch on the head roll. The actuating arm of this clutch is attached to the floor by a flexible rod; and by changing the point of attachment of this rod to the floor, the travel can be varied from nothing up to 25 feet a minute. Fig. 388 is a diagram taken directly from a Snyder vanner, and shows the path of a point on the belt when the machine is running. For comparison, Fig. 389 is given, showing the path of a point on a Frue belt.[37] These vanners were formerly used at the mill of the Ottawa Gold Mining and Milling Co. at Keewatin, Ontario, but have been replaced by Frue vanners owing to numerous breaks and unsatisfactory results.

OPERATION OF VANNERS.

§ 486. In using vanners it is necessary to consider the proper quality of feed pulp, the vibrations, rate of travel, slope, quantity of water, and the depth of the pulp bed.

Quality of Feed.—Pulp is fed to vanners from gravity stamps (after passing over amalgamated plates in most cases) in 23 mills (see Table 314); and from a Huntington, a Griffin and a Bryan mill in one case each. In 3 mills the tailings from each No. 1, stamp-fed, vanner go to two No. 2 vanners, the second vanners completing the work of the first. The maximum size of grain actually fed to vanners in some of the stamp mills, as shown by Table 314, ranges from 0.41 to 1.13 mm. (0.016 to 0.045 inch), the commonest size being about 0.75 mm. (0.03 inch). In 7 mills, vanners are fed with middlings from convex revolving slime tables, a practice which is logical and economical. The table middlings are free from the fine rich slimes which are difficult for the vanner to handle. This plan was adopted in Mill 30 to displace the practice of sending coarser material from classifiers to tables, and finer to vanners, with greatly improved results. In Mills 78 and 79 the concentrates from canvas tables are finished on end-shake vanners, with the object of enriching an already high grade product without special regard for clean tailings; but in these cases very exceptional adjustments are required (see the Gates vanner, § 483). The tailings are re-treated on special canvas tables.

In regard to classifying pulp for vanners, it must be remembered that a classifier will not do satisfactory work unless the quantity of feed water is regular. The feed probably is regular in all the cases of classification shown in Table 314. This table shows that vanners are fed with classified pulp from hydraulic classifiers in one mill; from surface current classifiers in one mill; from whole current classifiers in eight mills; and from a whole current classifier, mixed with the finest jig tailings, in one mill. Tailings from the finest jigs go directly to vanners in one mill. Vanners receive the overflow of hydraulic classifiers in five mills; and the overflow of whole current classifiers in one mill. Fraser & Chalmers hold that it is not wise to classify the feed to vanners if it is finer than 30-mesh, or 40-mesh at the utmost limit, and in no case where the water quantity varies. The Union Iron Works hold that it is not wise to classify pulp for vanners unless it is rich in sulphurets, which slime easily, noting that the classifier adds one more apparatus to be attended, and loses two or three feet of mill head without compensating advantages, except as just indicated. In one of the gravity stamp gold mills on the author's list, hydraulic classifiers were tried on pulp stamped through a *30-mesh* screen; but the result was unsatisfactory on account of frequent variations in the water, due to hanging up part of the stamps or to other causes. The vanner treating the first spigot varied from normal load to a great overload, while the last of the series varied from no load at all to so much water that it would wash off all the ore from the vanner. On the other hand, Fraser & Chalmers report successful work at the Columbia mill, Marshall Basin, Colorado, with pulp stamped through a *20-mesh* screen and sent to a hydraulic classifier. The first spigot went to a corrugated belt vanner which treated 14 tons in 24 hours; the three remaining spigots going to smooth belt vanners, the classification increasing the capacity of each of these from 5½ tons to 7 tons in 24 hours.

Vibrations.—The number of vibrations recommended by the manufacturers for a plain belt Frue vanner, with a throw of one inch, is 180 to 200 per minute; for the corrugated belt it is 194 to 210; above 210 are said to strain the machine. In the mill practice, the number was found to range from 160 to 216, but 180 to 200 are most common (see Table 314). For end-shake vanners the number ranges from 200 to 240, but the amount of throw with the high speed is less than one inch. The amount of vibration is generally one inch in all the standard vanners, but some designs have the eccentrics adjustable for greater or less throw, to suit varying conditions. The Gates fine-pulp vanner uses a throw of only $\frac{1}{16}$ inch. In general the greater the throw the more the pulp is liquified.

The number of vibrations and amount of throw are interdependent and must be considered together. If a high speed is adopted, a small throw must be used to prevent injury to the machine and allow the concentrates to settle; and *vice versa*, if a low speed is adopted a long throw should go with it in order to soften the pulp sufficiently to allow the quartz to rise to the upper layer.

§ 487. *The travel* of the belt is the adjustment on which the mill man chiefly relies for regulating the vanner. For the smooth belt, Fraser & Chalmers recommend 24 to 36 inches per minute; and that found in the mills ranges from 18 to 85 inches per minute, 24 to 45 inches being most common. The travel of the corrugated belt is generally faster than of the smooth belt. The purpose of the belt travel is to carry up the concentrates to the upper end. If it is too rapid it will carry up quartz into the concentrates, and if it is too slow it will allow concentrates to be washed down into the tailings.

The slope of the concentrating plane recommended by Fraser & Chalmers, is from 3 to 6 inches in 12 feet; that found in the mills ranges from 1½ to 8.8 inches, 3 to 5 inches being most common. When a corrugated belt is used, the inclination is greater than with a smooth belt by 2 or 3 inches in 12 feet. The amount of slope is all important: too much sends the valuable mineral into the tailings; and too little sends the quartz into the concentrates, and tends to make the bed too thick, and to form banks on the sides of the side-shake vanners.

The quantities of water used on vanners in several mills, and those recommended in Fraser & Chalmers' catalogue, are given in Table 316. On Frue vanners in the mills, the quantity fed with the pulp varies from 2 to 7.5 gallons per minute, and the wash water varies from 1 to 2.80 gallons per minute. The pulp fed to these vanners contains from 1.6 to 7.6 tons of water per ton of ore; the total, including the wash water, ranging from 2.4 to 10.7 tons of water per ton of ore. It will be noticed that the Woodbury end-shake vanners in Mill 61 each receive 18 gallons of water per minute in the pulp and use 2.75 gallons for wash

TABLE 316.—WATER USED ON VANNERS.

Mill or Authority.	Water—Gallons per Vanner per Minute.			Sand in 24 Hours.	Ratio by Weight of Feed Water to Dry Sand	Ratio by Weight of Total Water to Dry Sand	Width of Belt.	Slope. Inches in 12 Feet.	Travel. Inches per Minute.
	Fed with Pulp.	For cleaning Jets above and below.	Total on Belt.						
Frue Vanners.									
				Tons.			Feet.		
53	2.00	1.00	3.00	7¾	1.6	2.4	4	3½	48
57	5.04	1.74	6.78	4	7.6	10.2	4	2½	24
60	.....	.....	12.67	7½ to 10½	.....	7.1 to 10.7	4	3¾	45
64	7.50	1.24	8.74	7¾	5.8	6.8	4	3 to 5	36 to 72
65	5.00	1.00	6.00	4½	6.9	8.2	4	3½	22
65, 73 and 74	4.25	1.125	5.375	12½	2.0	2.6	4	.....	.....
75	5.00	2.80	7.80	9⅝	3.2	5.0	4	.....	.....
80	5.00	1.00	6.00	5½	5.5	6.6	4	2½ to 3½	37 to 39
Fraser & Chalmers	1.50	1.00 (a)	2.50	4	2.3	3.8	4	3 to 6	24 to 36
	3.00	1.50	4.50	6	3.0	4.5			
Tulloch Vanners.									
74	4.25	1.125	5.375	12½	2.0	2.6	3½	.....	.....
Triumph Vanners.									
59	.....	.....	10.40	8¾	.....	16.7	4	3	26
62	.....	.....	12.67	7½ to 10½	.....	7.1 to 10.7	5	5.4	48
Woodbury End-shake Vanners.									
61	18.00	2.75	20.75	15	7.2	8.3	5	7 8	72

(a) The quantities given in this column by the mills include the water used in the spray-pipes beneath; but those given by Fraser & Chalmers do not include that.

water; but these machines treat an unusually large quantity of ore (15 tons in 24 hours).

The quantity of water is all important; too much washes the valuable mineral into the tailings, too little allows the quartz to pass up into the heads. It is well both for economy of water and for the saving of slimes, to use as little water as will do the work. In Mill 69 the denser pulp of a single issue battery is found to be decidedly better material for treating on a vanner than the thinner pulp of a double issue battery. Clayey, talcose, slaty and calcareous ores all form a glutinous pulp and should, therefore, be more dilute than quartz ores. Talc may even form a slippery coating on the belt, which needs to be brushed off from time to time with a corn broom.

Travel, slope and pulp water all depend upon each other, and must therefore be discussed together. To carry off quartz more rapidly toward the tail of the machine, we may either decrease the travel, increase the slope, or increase the pulp water. Conversely, to carry pyrite more rapidly toward the head of the machine, we may increase the speed of travel, decrease slope or decrease pulp water. Two or even all three of these adjustments may be changed at the same time.

In regard to slope and travel, it will generally be found that, with other conditions remaining the same, steep slope needs high speed of travel, and gentle slope needs slow speed. This is illustrated in Mill 71, for which two slopes are recorded, and the steeper slope is accompanied by the faster travel (see Table 314). There are three chief qualities of pulp which will call for variation in the slope and travel. They are: specific gravity of the heads and of the tailings; relative quantities of heads and tailings; and the size of the grains. If the heads are of low specific gravity, they may need more rapid travel or gentler slope, or both, than when they are of high specific gravity. If the tailings are of high specific gravity, they will probably need steeper slope or slower travel, or both, than would be the case with tailings of lower specific gravity. If the percentage of concentrates is large, a quick travel must be used to prevent the sheet of heads from being abnormally thick, because a thick sheet of heads will entangle much quartz. A steep slope will then be needed to take away the quartz. If these changes are not made and the machine is run normally, the quantity of feed will have to be less than it would be if it contained a smaller percentage of heads. Very fine pulp will be treated best with steep slope and rapid travel, and with but little water in the pulp. Under the special conditions of Mill 78, where very fine slimes are being treated, we find the extraordinary slope of 1½ inches in *one* foot, and travel of 85 inches per minute. This steep slope is necessary because fine pulp must be treated in a thin film; and, with the steep slope, rapid travel is required in order to prevent the pyrite from being washed into the tailings. Very coarse pulp will, in the author's opinion (although positive data is not at hand), be best treated with gentle slope; and with this it may be found best to use a large quantity of water, and slow vibrations of very long throw. This combination may cause the pulp to slop over the flanges of a side-shake vanner, and therefore be available only on end-shake vanners.

The proper quantity of water in the pulp varies inversely with the slope and directly with the travel. Where the slope is steep or the travel is low, the quantity of pulp water must be low to prevent loss in tailings; and where the slope is gentle or the travel is high, the pulp water should be in larger quantity in order to make clean heads and to prevent the bed from becoming too thick and forming side banks.

The bed of pulp on the belt, when a vanner is running properly, will be graded in richness from the head to the tail end, the heads being nearly free from gangue,

the tailings nearly free from concentrates. Four or five per cent. of quartz are commonly allowed to go into the heads for the sake of preventing the tailings from carrying off too much value. The great length of the concentrating plane is provided because the removal of the heavy mineral from the gangue takes place gradually. The author is of the opinion that in ordinary practice the best thickness of the bed from the pulp distributor to the tail roller is from 0.15 to 0.20 inch over the little rollers; and he believes it should never be more than 0.25 inch thick. It will of course, be somewhat thicker between adjacent rollers. If the bed is too thick it will "felt" (form a peculiar hard cake), which prevents the separation of the minerals. With a thick bed in the case of fine pulp, a side-shake vanner may set up waves from each side of the belt, and if these opposite sets of waves happen to coincide they will produce longitudinal banks and gutters all the way across the belt. Good separation cannot be made in these banks, while in the gutters there will be rapid currents that will tend to carry concentrates into the tailings.

The average thickness over the little rollers is given from seventeen mills in Table 317. These measurements were made with the special gauge described in § 884.

The number of grains in the depth of the ore bed is important. A bed 0.2 inch thick, with grains 0.02 inch (0.5 mm.) in diameter, is ten grains deep and permits easy separation. If it was 0.5 inch thick it would be 25 grains deep, and the work of separation difficult. It is evident, then, that the finer the pulp the thinner should be the bed. In Mill 78 the bed is exceptionally thin (0.08 inch), which is necessary because that mill is treating an unusually fine product. Table 317 shows that on 26 vanners in 7 mills the number of maximum grains depth of the bed ranges from 5 to 21, the most common numbers being 5, 6 and 7. To calculate these numbers the diameters of the maximum grains were determined from the size of holes in the stamp mill screens. Since in stamp mill

TABLE 317.—AVERAGE DEPTHS OF PULP BED ON VANNERS, MEASURED ABOVE THE LITTLE ROLLERS.

Mill No.	Kind of Vanner.	Number of Measures Averaged.	Depth of Pulp Bed.	Number of Maximum Grains in the Depth of the Bed.	Mill No.	Kind of Vanner.	Number of Measures Averaged.	Depth of Pulp Bed.	Number of Maximum Grains in the Depth of the Bed.
			Inches.					Inches.	
20....	Frue.....	8	0.13	.....	61....	Woodbury.	9	0.15	5
	Frue.....	7	0.11	.....	62....	Triumph...	7	0.17	6
	Frue.....	7	0.11	.....		Frue.....	8	0.21	7
25 ...	Frue.....	1	0.12	.....	65....	Union.....	6	0.14	5
26....	Frue.....	4	0.27	.....		Union.....	5	0.15	5
	Frue.....	4	0.24	.....		Union.....	3	0.16	5
	Frue.....	4	0.16	.....		Frue.....	8	0.16	5
30....	Frue.....	4	0.28	.....		Frue.....	8	0.17	6
	Frue.....	4	0.20	.....		Frue.....	8	0.17	6
41....	Tulloch (a).	3	0.13	.....		Frue.....	8	0.20	7
57....	Frue.....	1	0.43	14	68....	Frue.....	4	0.21	10
	Frue.....	1	0.35	11		Frue.....	4	0.16	8
	Triumph...	1	0.16	5		Frue.....	4	0.12	6
	Triumph...	1	0.21	7	71....	Frue.....	8	0.23	.....
	Triumph...	1	0.27	9		Frue.....	8	0.16	.....
	Triumph...	1	0.14	5	72....	Woodbury.	8	0.19	.....
28....	Frue.....	3	0.29	13	74 ...	Frue.....	9	0.19	.....
	Frue.....	6	0.33	15		Frue.....	4	0.17	.....
	Triumph...	3	0.28	12	78....	Gates.....	2	0.08	.....
	Triumph...	3	0.33	15	82....	Frue.....	4	0.19	9
60....	Frue.....	3	0.10	.....		Frue.....	4	0.43	21
	Frue.....	3	0.17	.....		Frue.....	4	0.36	18

(a) Measured at the middle of the belt.

pulp the majority of the grains are quite small, compared to the maximum, it follows that the actual number of grains in the depth of the bed is larger than that given in the table in each case.

To properly run a corrugated belt, the bed should be thinner than on a plain belt, and have almost no edge banks. This is accomplished by a steep slope. The logic of this is that the catching power of the belt is so great that we can afford to flow the quartz off to the tail more rapidly; and we thereby increase the capacity of the machine.

With a vanner properly adjusted the depth of the bed will be very nearly uniform. The following figures from a vanner in Mill 71 are given as representing a well adjusted machine: Depth on roller No. 5 (just below pulp distributor), 0.19 inch; depth on roller No. 6, 0.14 inch; depth on roller No. 7, 0.15 inch; depth on roller No. 8, 0.15 inch; depth on roller No. 9, 0.16 inch; depth on roller No. 10, 0.15 inch; depth on roller No. 11, 0.18 inch; depth on roller No. 12 (tail small roller), 0.14 inch.

If the concentrating plane is true, there may be a slight tendency of the bed to thin from the distributor toward the tail roller; but in the last instance, from Mill 39, shown in the following list, since the slope of the belt was about normal (3¾ inches in 12 feet) the greatly decreased depth toward the tail is due to either too rapid travel, too little slope or too little water.

	Mill 38.	Mill 39.	Mill 30.
	Inches.	Inches.	Inches.
Little roller No. 6 (a little below pulp distributor)	0.11	0.12	0.45
Little roller No. 8	0.23	0.18	0.33
Little roller No. 10	0.35	0.19	0.20
Little roller No. 12 (the tail small roller)	0.38	0.33	0.13

If the belt is untrue, the measurements of the bed show it. The first two columns of figures in the above list (from Mills 38 and 39) show a bad depression, increasing toward the tail, due to the rollers being out of line. The measurements also show whether the side adjustments are keeping the bed even from side to side. In Mill 35, measures were taken at the two ends of one single little roller half way down the vanner. At one end the bed was 0.094 inch deep, at the other end 0.145 inch deep, showing need of side adjustment.

If, on a side-shake vanner, thick, dead banks form on both sides of the belt, they indicate that the bed is too thick, caused either by too rapid travel, too gentle slope, or too little water in the feed pulp. Changing either of these adjustments will effect a cure; but to decide which to use, the mill man should try them all, one at a time, and adopt that which removes the evil and at the same time gives the cleanest tailings. If the sand and water are not evenly distributed upon the belt, first be sure that all the parts of the machine are in line, that the slack is taken up, and that there is no jar or bump in the machine. If a bank still forms on one side, it indicates that the shaking frame is not vibrating equally in both directions upon the toggles. The under toggle blocks on the main frame must then be adjusted by slackening their bolts and tapping them with a hammer, to overcome this uneveness. They should all be moved toward the side that has no bank. If this is not sufficient, the shaft boxes may be moved toward the belt if the bank is on the further side, or away from the belt if it is on the nearer side.

§ 488. CAPACITY OF VANNERS.—Fraser & Chalmers give, as the capacity of a 4-foot Frue vanner, 4 to 6 tons in 24 hours for stamp mill pulp, which has passed through a screen with fifty holes to the linear inch, and 6 to 8 tons if the pulp is a trifle coarser. Table 314 shows 4-foot side-shake vanners in 15 mills, treating from 4 to 12½ tons in 24 hours, with an average of 7¼ tons. Of 9 six-foot, side-shake vanners, treating from 6 to 16⅝* tons in 24 hours, the average capacity is 9⅜ tons. Two end-shake vanners, with 4-foot belts, treat respectively

* The vanner treating 16⅝ tons sends its tailings to two finishing vanners.

3¾ and 7¾ tons in 24 hours; and five end-shake machines, with 5-foot belts, treat from 5 to 15 tons in 24 hours, averaging 10 tons.

To be driven at its greatest capacity, a vanner needs rapid travel, in order to prevent the sheet of concentrates becoming so thick that the gangue cannot separate from it. Steep slope must then be used in order to carry the gangue down the slope. An ore with a large percentage of concentrates must not be fed as fast as one that contains less concentrates, because the sheet of concentrates would become too thick. When a vanner is driven beyond its natural maximum capacity, some concentrates will be lost in the tailings for lack of time for proper treatment. Very fine ore must be treated slowly, else the bed will be too thick even if the slope is steep. If it be attempted to overcome the difficulty by dilution with water, there is great danger of loss in the tailings.

The high capacity of the vanners in Mill 61, where one 5-foot machine treats 15 tons in 24 hours without any re-treatment of tailings, and saves 80% of the concentrates, is, in the author's opinion, chiefly due to the unusually steep slope (8$\frac{8}{10}$ inches in 12 feet) and rapid travel (72 inches per minute), though partly to the fact that the stamp batteries in this mill are adjusted for minimum sliming. The vanners have an end-shake, which is the most favorable for saving the fines. It will be noticed that in Mills 54 and 84, where the tailings of one vanner are re-treated on two other vanners, the higher capacity of the first machine is accompanied by steeper slope and faster travel than is found on the other two; and under similar conditions in Mill 83 the first vanner has faster travel and higher capacity than the second. In the three mills just mentioned, the first set of vanners receive very large quantities of ore; and if the contrary has not been proved by trial, it is an open question whether there would not be a closer saving by distributing the feed equally to all the vanners in the first place. In Mill 54, for example, there are 6 six-foot vanners, each treating 16¾ tons in 24 hours, followed by 12 vanners each treating 8¼ tons; but with the suggested change each of the 18 vanners would only receive 5⅝ tons, and there would be no re-treatment.

Power.—In estimating mill work Fraser & Chalmers allow ¼ horse power per vanner. Preston gives ½ horse power as common California practice. In Mill 53, 12 vanners, with the mill shafts for driving them, are reported as using 10 horse power. At Mill 59, the 16 vanners and their driving shaft require 7 horse power.

Cost of Repairs.—The following quotations are averages for single vanners. Mill 64 gives the average cost of repairs for five years including belt renewals, as follows:

	Belt.	Other Expenses.	Total.
Frue vanner	$19.12	$3.44	$22.56
Triumph vanner	26.25	5.60	31.85

Mill 41 reports that a rubber belt costing $120 is worn out in four years on a Tulloch vanner. Other mills report expense for belts as follows:

Mill No.	Average Annual Expense for One Vanner.	Kind of Belt.	Kind of Vanner.	Mill No.	Average Annual Expense for One Vanner.	Kind of Belt.	Kind of Vanner.
20....	$31.65 to $47.50	Frue.	Frue.	59....	$38.33	Woodbury.	Triumph.
24....	108.00	Frue.	Frue.		48.00	Blasdel smooth.	Triumph.
26....	27.00 to 67.50	Blasdel.	Frue.		46.00 to 57.50	Triumph.	Triumph.
28....	22.00 to 57.50	.....	Johnston.	61....	About 50.00	7-belt Woodbury.	Woodbury.
35....	23.75	Frue.	Frue.		About 60.00	13-belt Woodbury.	Woodbury.
40....	25.00	Frue.	Frue.	75....	20.00	Frue.	Frue.
57....	10.00 or more.	.....	.....	82....	27.40	Frue.	Frue.
58....	9.50	Frue.	Frue.				

In regard to these costs, it should be noted that the vanners vary in duty from those in Mill 24, worked night and day, six days a week, to those where the mill stands idle a good deal of the time. The author has not the facts in regard to this.

Mills report average expense for a single vanner per year, for repairs other than belt renewals, as follows:

Mill 26	$5.00	Frue.	Mill 26	$10.00	Johnston.
Mill 57	7.77	Frue.	Mill 57	2.60	Triumph.
Mill 75	Not over 10.00	Frue.	Mill 59	7.00	Triumph.
Mill 76	2.40	Frue.	Mill 61	About 12.00	Woodbury.
Mill 88	About 6.00	Frue.			

§ 489. VANNER TESTING.—Investigating the work of vanners by sizing tests and by assaying the different sizes, is most important, as it shows whether the values in the feed and in the tailings are contained mostly in the coarser sizes or in the finer. Having decided this, the first thing to consider is whether the vanner adjustments are all at their best; and then, if further treatment is necessary, what methods are applicable. Two instances of such investigations are here given:

The figures from Mill 68 (Table 318) show the percentage distribution of values in the coarse and fine sizes of the vanner feed and products. These values are computed in two ways: First, based on the original sample; and, second, based on the sum of the screened samples. This table shows how important is the consideration of the extremely fine slimes. The portion of the feed that will pass through a 100-mesh screen contains 68.58 or 76.65% of all the gold in the

TABLE 318.—SIZING TESTS OF VANNER FEED AND PRODUCTS IN MILL 68. FED FROM *SINGLE* DISCHARGE STAMPS WITH 30-MESH SCREENS.

	Sizes of Grains.	Percentage of Each Size.	Values per Ton.		Percentage of Total Values.			
					Gold.		Silver.	
			Gold at $20.67 an Ounce.	Silver. Ounces.	Based on Original Sample.	Based on Total of Screened Samples.	Based on Original Sample.	Based on Total of Screened Samples.
Battery pulp..	Original sample.....	.....	$4.13	1.70				
	On 30 mesh.....	0.02	0.63	0.50	0.02	0.02	0.04	0.04
	Through 30 on 40 mesh..	0.12						
	" 40 on 60 " ..	9.10	2.06	0.70	4.54	5.07	3.75	3.71
	" 60 on 80 " ..	11.99	2.48	0.90	7.20	8.04	6.35	6.28
	" 80 on 100 " ..	10.16	3.72	1.09	9.15	10.22	6.51	6.45
	" 100 mesh.....	68.58	4.13	2.09	68.58	76.65	84.31	83.52
	Totals and averages...	99.97	$3.70	1.73	89.49	100.00	100.96	100.00
Concentrates..	Original sample.....	.....	$41.34	108.60				
	On 30 mesh.....	0.26	2.06	11.90	0.01	0.01	0.03	0 03
	Through 30 on 60 mesh..	3.81	24.80	51.19	2.29	2.30	1.80	1.75
	" 60 on 80 " ..	6.93	27.70	68.70	4.64	4.48	4.38	4.28
	" 80 on 100 " ..	8.46	32.94	84.40	6.60	6.36	6.57	6.49
	" 100 mesh.....	80.52	46.30	190.80	90.18	86.94	89.57	87.51
	Totals and averages...	99.98	$42.88	111.15	103.72	99.99	102.35	99.99
Tailings.....	Original sample.....	.....	$1.24	1.29				
	On 30 mesh.....	0.01	0.41	0.80	0.02	0.02	0.04	0.04
	Through 30 on 40 mesh..	0.05						
	" 40 on 60 " ..	5.21	1.24	0.90	5.21	5.21	3.64	3.50
	" 60 on 80 " ..	13.15	1.24	0.90	13.16	13.16	9.17	8.82
	" 80 on 100 " ..	9.63	1.24	1.00	9.64	9.64	7.47	7.18
	" 100 mesh.....	71.93	1.24	1.50	71.97	71.97	83.64	80.46
	Totals and averages..	99.98	$1.24	1.34	100.00	100.00	103.96	100.00

feed, according to the method of computation; in the heads the same size contains 90.18 or 86.94% of all the gold in the heads; and in the tailings this size contains 71.97% of all the gold going to waste. The suggestion is that if this fine product in the tailings was separated and treated on canvas tables, followed by a steep end-shake vanner, as in Mill 78, a good addition to the yield might be made, especially as the sulphurets are high grade (the concentrates carry $110 value per ton) and the tailings carry about 40% of the value fed to the vanner. Since the author's visit, however, a cyanide leaching plant has been installed to treat the tailings, and is probably covering the same ground in another way.

The figures from Mill 55 (Table 319) show 44.68% of the tailings silver and 26.35% of the tailings gold to be in a product finer than 200-mesh. Considering the large loss in tailings and the high value of the concentrates (about $80.00 per ton), it was decided to treat the tailings in a canvas plant like Mill 78, and this treatment has resulted in a considerably increased saving.

Another method of vanner testing, closely allied to the above, is discussed in § 490.

TABLE 319.—SIZING OF VANNER FEED AND PRODUCTS IN MILL 55. FED FROM *SINGLE* DISCHARGE STAMPS WITH 14-MESH SCREENS.

	Size of Grains.	Percentage of Each Size.	Values per Ton.		Percentage of Total Values.	
			Gold at $20.67 an Ounce.	Silver. Ounces.	Gold.	Silver.
Battery pulp..	On 30 mesh.....	10.88	$3.51	9.23	6.34	8.18
	Through 30 on 60 mesh.....	28.52	6.61	8.78	31.29	20.41
	" 60 on 120 "	14.61	7.06	10.96	17.05	13.05
	" 120 on 200 "	15.49	7.86	13.82	20.21	17.45
	" 200 mesh.....	30.50	4.96	16.46	25.11	40.91
	Totals and averages.....	100.00	$6.02	12.30	100.00	100.00
Concentrates..	On 30 mesh.....	4.95	$75.65	31.70	6.76	3.09
	Through 30 on 60 mesh.....	16.25	111.62	39.30	32.74	12.57
	" 60 on 120 "	17.62	60.56	39.40	19.28	13.67
	" 120 on 200 "	22.00	47.54	45.40	18.87	19.67
	" 200 mesh.....	39.18	31.63	66.10	22.35	51.00
	Totals and averages.....	100.00	$55.40	50.78	100.00	100.00
Tailings.....	On 30 mesh.....	11.02	$2.69	6.47	18.16	10.95
	Through 30 on 60 mesh.....	28.00	2.07	5.70	35.51	24.51
	" 60 on 120 "	14.70	1.24	4.74	11.17	10.70
	" 120 on 200 "	11.60	1.24	5.14	8.81	9.16
	" 200 mesh.....	34.68	1.24	8.39	26.35	44.68
	Totals and averages.....	100.00	$1.63	6.51	100.00	100.00

THE PRINCIPLE OF VANNER SEPARATION.

§ 490. It is well known to mill men that vanner tailings carry away a portion of the finest grains of the heavy mineral, and it is often stated that this loss consists of only a few accidental particles. The author believes, however, that when ore carrying grains ranging from a diameter of 0.75 mm. down to the finest slimes is treated without previous classification, a considerable percentage of the finest particles of heavy mineral must go into the tailings; and, just as in free settling and hindered settling, finer grains of heavy mineral are balanced with coarser grains of quartz, according to definite ratios (see Tables 261 and 307), so with any given set of adjustments of a vanner, there will probably be a definite ratio between the maximum diameters of quartz and of heavy mineral in the tailings. This ratio will be called the *agitation ratio*. To substantiate his opinion, the author has only to point to Mill 78, which treats tailings from the well-run vanners of Mill 71 by means of a hydraulic classifier and canvas tables. The

spigot product from the classifier carries all the coarser sizes of quartz with practically no pyrite. The overflow goes to canvas tables followed by a specially adjusted finishing vanner, and yields a final product amounting to about 1,000 pounds of clean pyrite per day, while the vanners of Mill 71 yield about 2¾ tons of clean pyrite per day. That is, more than 15% of the pyrite fed to the vanners of Mill 71 is too fine to be saved with the coarser portion. This is not a criticism of Mill 71, but simply shows a scientific principle. The vanners in this mill probably save all they can, and then Mill 78 completes the work.

As a preliminary determination of the agitation ratio, the author made sizing tests of the classifier spigot product, and of the final concentrates from Mill 78, showing the sizes of quartz and of pyrite in the vanner tailings of Mill 71; and the results are given both in Table 320 and on the cumulative plot Fig. 390.

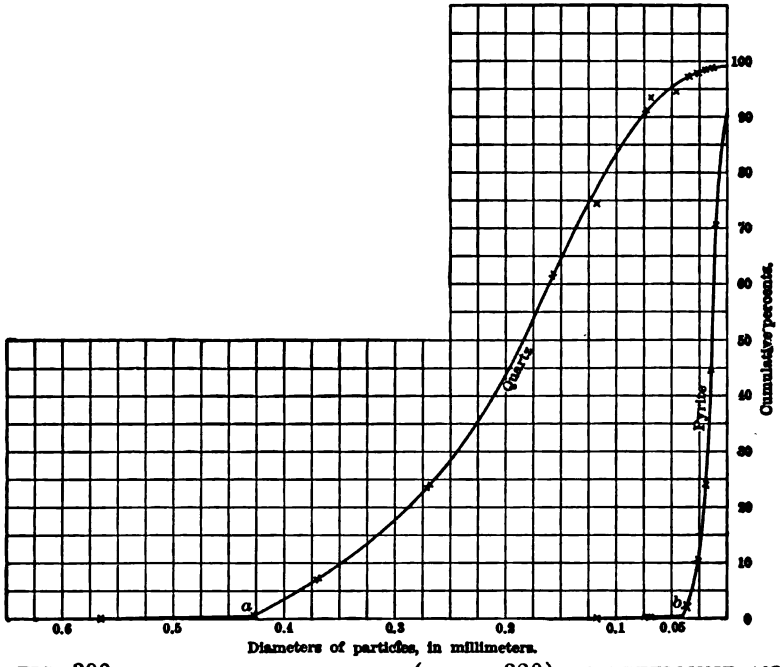

FIG. 390.—PLOT OF SIZING TESTS (TABLE 320) TO DETERMINE AN AGITATION RATIO FOR VANNERS.

The notes in the table show that the three coarsest sizes of the concentrates contained a very little quartz, and pyrite only in cemented grains, and that the free pyrite in the next four sizes was respectively 0.1%, 0.1% 0.1% and 1.8% of all the concentrates. The remaining sizes were all free pyrite.* As we are concerned only with the free pyrite in this product, the few stray quartz and cemented pyrite grains were disregarded in plotting. For plotting the quartz curve, on the other hand, the figures in the table require no modification. Referring to Fig. 390, it will be noticed in the case of both quartz and pyrite that a line drawn through the points representing the few coarsest grains has a very different direction from the rest of the curve; in fact, there is apparently a significant point on each curve (*a* and *b*). The few grains coarser than *a* and *b* are insignificant in quantity and may be disregarded. Practically, then, the

* The method of very fine sizing is described in § 861.

TABLE 320.—SIZING TESTS FROM MILL 78, TO DETERMINE AN AGITATION RATIO FOR VANNERS.

Spigot Product from Classifier. (a)		Concentrates from the Finishing Vanner that Follows the Canvas Tables.		
Size in Millimeters.	Percent.	Size in Millimeters.	Percent.	Appearance under a Microscope.
0.980–0.702	0.08	.....	.....	.....
0.702–0.566	0.1	.....	.....	.....
0.566–0.427	0.6	.....	.....	.....
0.427–0.371	6.4	0.427–0.371	0.3	Lumps of fine pyrite cemented together by oxidation.
0.371–0.270	17.0	0.371–0.270	0.4	Same as above, with a few grains of quartz.
0.270–0.159	37.7	0.270–0.159	0.9	Same as above, with more grains of quartz.
0.159–0.119	12.8	0.159–0.119	1.1	Mostly pyrite and quartz cemented together. Free pyrite estimated at 0.1% of whole sample.
0.119–0.074	15.9	0.119–0.074	1.1	About three-fourths quartz. Rest mostly cemented lumps of pyrite. Free pyrite estimated at 0.1% of whole sample.
0.074–0.069	2.7	0.074–0.069	0.4	About the same as the preceding.
0.069–0.047	1.3	0.069–0.037	3.7	About half quartz. Some cemented lumps of pyrite. Free pyrite estimated at 1.8%.
0.047–0.034	2.6	0.037–0.026	8.6	Pretty clean pyrite.
0.034–0.025	1.3	0.026–0.020	13.4	
0.025–0.019	0.4	0.020–0.015	20.1	
0.019–0.013	0.1	0.015–0.010	26.6	
Fines.....	0.2	Fines.....	20.9	

(a) All sizes of the spigot product, except the last, are practically clean quartz.

maximum size of quartz (*a*) is 0.427 mm., and pyrite (*b*) is 0.040 mm., giving an agitation ratio ($\frac{a}{b}$) of 10.7. This ratio will be much affected by the way the vanners are run, and will probably be a maximum only when the pulp bed is thin (not more than 0.2 inch thick) and all the adjustments are made to the best advantage. A thick bed will send coarse pyrite into the tailings and so reduce the ratio. The average depth found in Mill 71 was 0.16 inch, so that the ratio 10.7 was obtained under favorable conditions. The determination of the ratio in any mill is a good test as to whether or not the vanners are well run.

B.—Bumping and Jerking Tables.

These machines use mechanical agitation to bring the heavy grains and the light grains into their respective layers on a washing surface; and they use a bumping or jerking action to convey the heavy grains to one side or end of the machine, while the current of surface water conveys the light grains to another side or end.

Bumping and jerking tables are divided into two classes:

I. Side-bump, which have the bump or jerk at right angles to the flow of the water;

II. End-bump, which have the bump or jerk in the opposite direction from the flow of the water.

The side-bump tables may be sub-divided into (*a*) those having plane surfaces and (*b*) those having riffled surfaces.

Ia.—SIDE-BUMP TABLES WITH PLANE SURFACES.

§ 491. The Rittinger Table was the first of this class. It uses a cam, spring and bumping post to convey the heavy layer of concentrates to one side; and a film of water flowing at right angles to the direction of the bump to convey the light layer of waste down the slope to the proper place. The table is 8 feet long by 4 feet wide, and is generally mounted in pairs, with a dividing partition. It is suspended upon four rods, and the slope is regulated either by chains at the upper ends of these rods, winding upon drums, or by elevating nuts. The slope recommended by Rittinger varies from 6° for the coarsest to 3° for the finest slimes.

The feed pulp, which must be a classified product, is distributed upon one corner of the head of the table, over a width of 8 to 12 inches, and the agitation immediately separates the heavy and light minerals into layers. The bumping action is produced by a cam, which pushes the table toward one side, a spring which forces it back, and a bumping post, which stops it suddenly on its return. This action causes the ore particles to move across the table by jerks, while the wash water, which is fed over the remainder of the head, causes them at the same time to move down the slope, the light ones more rapidly than the heavy. The combination of these two actions yields the mineral particles spread out like a fan, with the heaviest mineral pushed farthest across the table, the middle weight mineral next, and the lightest least. By properly placing dividing fingers at the foot of the table, each of these products may be guided into its own box. Endwise motion of the table is prevented by guides.

The action of the table is seriously interfered with by the bank of quartz sand which turns the current of wash water so that the film is not of the same thickness all over the table, as the theory seems to demand that it should be. Instead, it is harmfully concentrated into a stream of considerable cutting power along the line where the best separation should take place. This cutting stream impairs the action of the machine and prevents it from making as clean tailings as one would expect. Improved results (both qualitative and quantitative) have been obtained by applying the wash water from a diagonal spray pipe instead of from a box at the head.[31]

For the coarsest slime a wooden table makes 120 bumps a minute; for finer material 150, and for the finest 180 to 240. The length of throw is from $1\frac{1}{2}$ inches for the coarsest, down to $\frac{1}{2}$ or $\frac{3}{4}$ inch for the finest. The capacity varies from 155 pounds (dry weight) of coarser to 55 pounds of fine slimes per hour, the corresponding amount of water with the pulp varying from 1.6 gallons to 0.8 or 0.9 gallon a minute, and the amount of wash water from 5.28 to 3.17 gallons a minute.[9]

Various materials have been used for the table surface—wood, iron, zinc, glass, marble, slate, cement and rubber. With wood, some care has to be used to keep the surface smooth, but on the whole this has been found the most satisfactory, though a covering of rubber has in some cases been found an improvement. It should be noted that, unless the rubber is fairly thick, it is hard to keep smooth. Marble and glass are very liable to breakage, especially the former. In one case marble was found inferior to iron, because the surface was too smooth.[15] Iron makes the table very heavy, and so increases the power used.

At Bleiberg, Belgium,[23] on Rittinger tables treating a galena-blende ore, the tailings contained about 2% of lead, while the blende product was wholly free from lead. It was found that this galena was in extremely thin scales, which floated and were carried off by the water. By laying a straight, thin cleat from the feed side to the galena discharge, the difficulty was overcome. In case one such cleat was not enough, a second was placed lower down on the table. This same device was introduced at Steinenbrück and at Welkenraedt.

The shock due to the bump of the table is transmitted to the mill frame; and at Dam, Belgium, in order to prevent this, two tables were arranged to strike simultaneously against opposite sides of a bumping post placed between them.[33]

Kávan found that equally good work could be done with a table only 5 feet long as with the usual length of 8 feet. The lightness of his table, which has a wooden surface, permits a more rapid shake, which increases the capacity, and decreases the necessary amount of water.[54]

Parsons, at Mill 25, drives two double tables from one shaft, by using a double screw-threaded cylindrical cam, which forces the two double tables apart from each other, while opposing springs force the tables to come back and strike each

other. Thus the bumping post is done away with, and with it nearly all the consequent shock to the mill frame. The dimensions, slope and shakes of Parsons' machines are shown in Table 322. Their surfaces are of wood, covered with enamelled duck. The feed apron for the pulp is 10¼ inches wide. The wash water comes from two ½-inch cocks and a third is provided, but not used. Each double No. 1 table treats 5 tons of pulp (dry weight) in 24 hours, and there are 24 of them to treat the spigot products of the No. 5 surface current classifier. A double table uses 1,200 gallons of wash water in 24 hours. Assays of products are as follows: Feed to No. 1 table contains 9.46% lead; tailings of No. 1 table contain 1.89% lead; feed to No. 2 table contains 6.23% lead; tailings of No. 2 table contain 1.74% lead.

The Wilfley table (§ 493) is occasionally used with a smooth surface; but since its chief use is with riffles, it is described later, under that head.

§ 492. THE STEIN, CORNING, BILHARZ AND LUHRIG TABLES.—These tables resemble each other so much that they will be described together. They all have endless traveling belts, horizontal in length, but sloping in width, carried on shaking frames, with fixed frames to carry the driving mechanism. The Bilharz (Fig. 391) has an iron fixed frame set on wooden sills, carrying a shaft, a pulley and a three-armed cam at one end, while at the other there is a spring

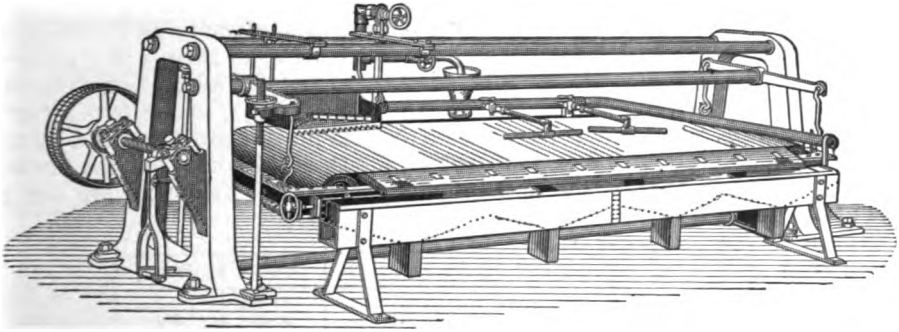

FIG. 391.—BILHARZ TABLE.

and bumping post. The cam draws the table toward it, and at the release the spring pulls it back against the bumping post. The travel of the belt is either intermittent, given by ratchet and pawl, or continuous by a vertical belt working on a grooved pulley on the roller at the head end. The shaking frame is suspended by four rods from four arms upon a rocker shaft. By tilting this shaft the table may be given any desired slope. The belt, which is 0.75 meter (2 feet 6 inches) wide, is stretched between two end rollers 2.5 meters (8 feet 2 inches) from center to center. The upper part of the belt is supported, in the Stein and Bilharz tables, by a plane wooden surface with diagonal grooves which are supplied with water for lubrication. The Luhrig table supports the belt by twelve little rollers 190 mm. apart. The Corning also uses rollers. The return part is carried by the three large rollers. Luhrig uses a flange on the upper edge of the belt, which permits feeding closer to the edge, and so extends the working surface 0.2 m. in width. The belts have little blocks on their edges, which drop into little sockets on the driving roller and serve for draught and guiding.

It will be noticed that, while on the Rittinger table the greatest dimension is at right angles to the bump, the greatest dimension of these tables is in the same direction as the bump. This permits the minerals to spread out in a more perfect fan shape, and so prevents the banking of the sand and the cutting action of the water.

These tables should be fed with sorted products from classifiers, and when so fed they do clean work, not only in two mineral separation, but also in three or four mineral separation. The pulp is fed upon the upper rear corner of the belt, and the agitation separates the different minerals into layers. Wash water is applied from spray pipes. The travel of the belt, assisted somewhat by the bump of the table, carries the ore forward; while the water flowing down the slope transversely, washes the light minerals rapidly toward the lower edge, the heavy minerals more slowly. Better results are obtained when the wash water is applied from a diagonal spray pipe keeping near the upper edge of the ore than when it is applied along the upper edge of the belt. The products are received in a launder with four compartments each having a spigot for continuous discharge.

The following figures on adjustments are quoted:

Belt Travel per Minute.	Vibrations per Minute.	Length of Throw.
Stein, 4.2 to 4.8 m. (13 feet 9 inches to 15 feet 9 inches).....	150 to 180	15 to 27 mm. (0.6 to 1.1 in.)
Bilharz, 4.2 m. (13 feet 9 inches).....	150	
Luhrig, 3.3 m. (10 feet 10 inches).....	200	

The slope is about 5° for the coarser products, this slope being regulated by the appearance of the products. The capacity for the ordinary size of table appears to be about 3 tons in 24 hours.[31 and 52] Tables of this capacity at Freiberg use 14 liters (3.7 gallons) of water per minute in the feed, 52 liters (13.7 gallons) for washing and blow-off jets, and 8 liters (2.1 gallons) for lubrication under the belt. At Diepenlinchen, Prussia,* a Luhrig table 3 feet 4 inches by 11 feet 6 inches (which is considerably larger than the size given above) works a galena blende ore at the rate of 9.6 to 13.2 tons of slimes in 24 hours, but the amount of work needed to re-treat the middlings is not stated. Following are the assays of the products:

	Lead.	Zinc.
Lead product.....	60–65%	.....
Lead-zinc middlings.....	20–25	20%
Zinc product.....	.....	25
Tailings.....	Trace.	1½–2

At Ramsbeck a Luhrig machine, treating a rich middle product, yielded the following results:[32]

	Lead.	Zinc.
Feed ore.....	29.66%	27.99%
Lead product.....	75.98	4.77
Lead-zinc middlings.....	29.96	29.68
Zinc product.....	9.87	59.86
Zinc-quartz middlings.....	12.35	30.00
Quartz tailings.....	Not stated.	Not stated.

Ib.—SIDE-JERK TABLES WITH RIFFLED SURFACES.

§ 493. THE WILFLEY TABLE separates the heavy and the light grains into layers by agitation, and then, by the jerking action, throws them toward the head end, while at the same time the lighter grains are washed down the slope toward the tail side by the surface water, which flows at right angles to the direction of the jerk. The table is furnished with longitudinal riffles or grooves; and the concentrates settle in the riffles and are thus forced more directly toward the head, while the gangue rolls over the cleats and down to the tail side.

* Private communication from John W. Meier.

The main frame (see Figs. 392*a* and 392*b*) consists of two heavy longitudinal timbers, *1* and *2*, with four cross timbers, *5*. Two of the latter are made heavy to support the shaking mechanism, and two are light. The frame is held to-

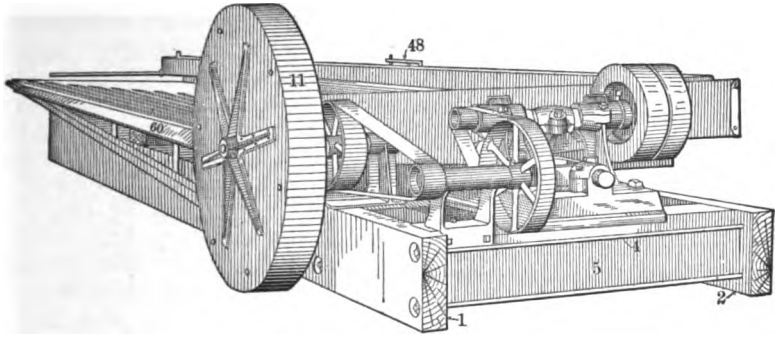

FIG. 392*a*.—WILFLEY TABLE.

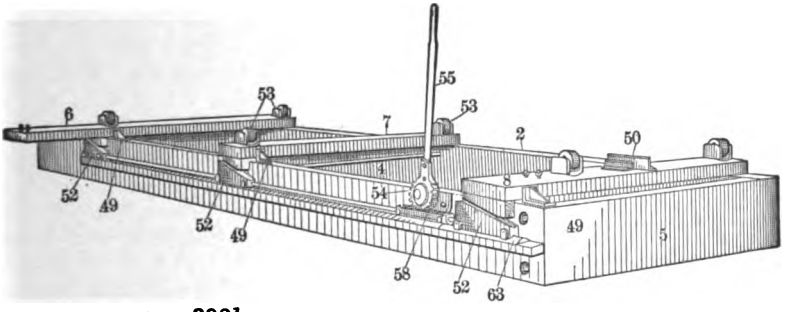

FIG. 392*b*.—MAIN FRAME OF WILFLEY TABLE.

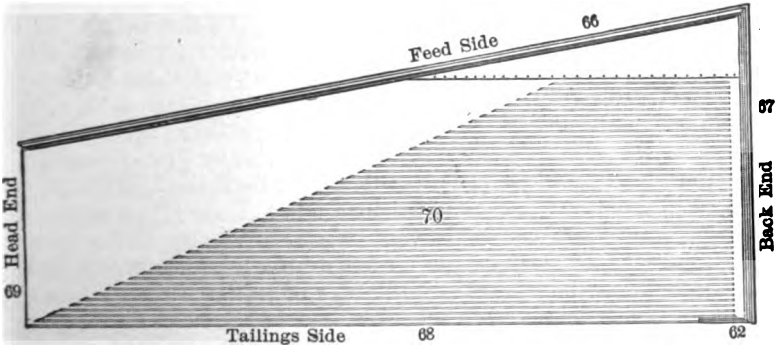

FIG. 392*c*.—WILFLEY TABLE TOP.

FIG. 392*d*.—WILFLEY FEED AND WASH WATER TROUGH.

gether by tie bolts, *4*. Upon the main frame are three cross timbers or table-rests, *6*, *7* and *8*, which are screwed to the tail side of the main frame by lag screws that have a little play, and rest at the feed side upon wedges, *52*, by which they can be raised and lowered between guides, *49*.

These wedges are all connected, by a tie bolt, with a rack *58*, pinion *54*, and lever *55*, so that they can be moved simultaneously and equally. Upon each of the table-rests are screwed two supports carrying chilled iron rollers *53*, and upon the six rollers so placed the table executes its endwise jerking motion. Hard steel plates are screwed upon the under side of the table to take the wear of the rollers. Side motion of the table is prevented at one end by connection to the driving mechanism, which is firmly bolted to the main frame, and at the other end by the guide *50*, which engages with a projection on the under side of the table. The table is made of wood covered with linoleum, and has a rim along the feed or upper side *66* (Fig. 392*c*), and across the back end *67*. It has no rim upon the lower or tail side *68*, nor upon the head end *69*. The table is 16 feet long, 7 feet wide at the back end and 4 feet wide at the head end, and the corners at each end of *68* are right angles. The linoleum is tacked directly upon the wood, using tacks only around the margin; and a set of longitudinal riffle cleats of wood, *70*, is tacked upon this plane surface. Fig. 392*c* shows 46 cleats ½ inch wide, with ⅛-inch spaces or riffles between them. The upper cleat is 4 feet long and the lower one nearly 16 feet long. At the back end they are about ¼ inch high and taper down to nothing toward the head end. They all start at about 3 inches from the back rim; and their head ends lie in a straight diagonal line, dividing the surface into two parts—the riffle or concentrating plane, and the cleaning plane, on which there are no riffles. The deeper the riffles the greater their power to retain heavy grains, and on this account the lower riffle-cleats are often made higher than the upper, and those between are graded from one to the other. The taper of the riffles causes a *gradual* separation of quartz from the heavy mineral, which favors clean work, but the concentrates must not be forced to climb too steep a grade in consequence of this taper, for if so, they will form a solid bank, and refuse to move forward. The table has a very slight rise from the back end to the head end (½ inch in 16 feet); and for a space of 3 inches at the back end the surface slopes up to the back to a height of ¾ inch, which prevents the formation of any bank at that end.

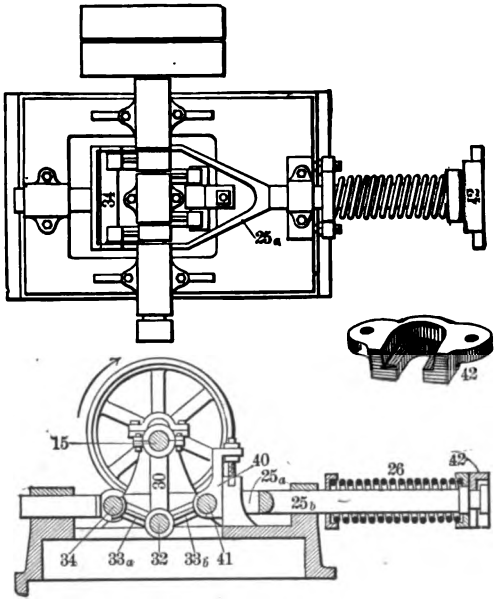

FIG. 392*e*.—DRIVING MECHANISM OF WILFLEY TABLE.

The table is driven by the mechanism shown in Fig. 392*e*. As the crank *15* revolves, the pitman *30*, and with it the pin, *32*, rises and falls. The movable pin *34* and the fixed pin *41* are connected with *32* by means of the toggles *33a* and *33b*, so that, as the pitman rises, *34* is moved to the left; and this motion is transferred to the table through the yoke *25a*, the connecting rod *25b* and the slotted keeper *42*, the latter being bolted to the back end of the table. This movement compresses the spring *26*, and when the pitman falls the spring returns the table. Since the spring does not affect the character of the movement, it should be set only tight enough to prevent rattling; any further tight-

ening simply consumes power to no purpose. The slot in the keeper *42* permits the slope of the table to be varied, while its connection with the power is maintained. The table receives an accelerated motion to the right when the pitman descends, and a retarded motion to the left when the pitman rises; and this action carries the ore particles from left to right; that is, from the back end toward the head end of the table. The ideal jerking motion would be uniformly accelerated during the forward movement and uniformly retarded during the return. This mechanism closely approximates the ideal, for if the crank circle be divided into twenty-four equal parts, the amount of motion for equal times, when running at 240 revolutions per minute, and with a ¾-inch stroke, will be:

Time.	Movement of Crank.	Movement of Table. Inches.	Time.	Movement of Crank.	Movement of Table. Inches.
1/24 second	0–1	0.000 forward.	1/24 second	12–13	0.035 backward.
" "	1–2	0.005 "	" "	13–14	0.080 "
" "	2–3	0.025 "	" "	14–15	0.115 "
" "	3–4	0.065 "	" "	15–16	0.190 "
" "	4–5	0.050 "	" "	16–17	0.110 "
" "	5–6	0.085 "	" "	17–18	0.095 "
" "	6–7	0.110 "	" "	18–19	0.090 "
" "	7–8	0.115 "	" "	19–20	0.045 "
" "	8–9	0.180 "	" "	20–21	0.030 "
" "	9–10	0.110 "	" "	21–22	0.095 "
" "	10–11	0.060 "	" "	22–23	0.005 "
" "	11–12	0.025 "	" "	23–24	0.000. "

The diagram of this stroke, together with a longer and a shorter one, is shown in Fig. 393. The manufacturers recommend that, for ordinary work, the stroke should be ¾ inch, that it should never be more than 1 inch nor less than ⅝ inch, and that the speed should be 240 strokes per minute. The length of stroke is increased by raising the adjustment block *40* (Fig. 392*e*). The stroke becomes sharper or more vigorous as its length is increased, if the number of strokes per minute remains constant; and if any change is made the block *40* must be moved only a little at a time, for a slight change at this point makes a difference in the work of the table.

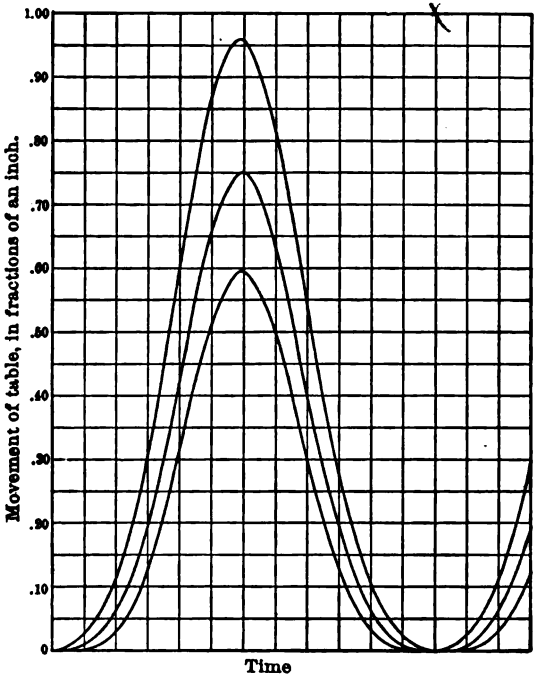

FIG. 393.—ENLARGEMENT OF STROKE DIAGRAMS (CONSTRUCTED MATHEMATICALLY) FOR WILFLEY TABLE.

The feed box for pulp and wash water (see Fig. 392*d*) extends along the whole upper side, *66*, of the table, being supported about 1 inch above the table by brackets *48* (Fig. 392*a*) bolted to the table-rests. The pulp is delivered to this box near the back end, and the space over which the pulp passes to the table is controlled by a partition which can be set at any desired distance from the end. The wash water enters between

two partitions with adjustable gates *71*. These gates serve to regulate the quantity of clean wash water passing to the different parts of the table. The pulp and wash water pass to the table through holes in the back of the feed box, near the bottom, spaced about 2¾ inches between centers. In trial runs at the Butte Reduction Works[44] it was found that the stationary feed box did not discharge the ore well; but when it was given a shaking motion by fastening it to the table, the discharge was satisfactory. It was also found better to displace the wooden water distributor by a 1½-inch iron pipe, perforated on its upper side with ⅜-inch holes, spaced 2¾ inches between the centers. This pipe is supported, in a stationary position, by the brackets *48*.

The lip, *60* (Fig. 392*a*), over which the tailings discharge, lacks about 16 inches of extending to the head end of the table, and along this 16-inch space the middlings discharge into a special launder. If desired, they run back to the little sand wheel *11*, and are returned to the feed box, but they will generally be sent to other machines. The concentrates are discharged at the head end, *69* (Fig. 392*c*).

The table may be fed with classified products, and with such a feed it is a high grade three mineral concentrator. It may also be fed with whole stamp pulp or similar material *when only two minerals are to be separated,* and thus enters the field of vanners. While it does very good work on such unclassified pulp, the manufacturers recommend that the extremely fine material be separated and treated by itself. The maximum size of the feed depends on the character of the ore. As coarse as 4-mesh (about 4 mm.) is said to have been successfully concentrated, and also ore that would all pass through a 200-mesh (about 0.06 mm.) screen.* The latter was settled in a large classifier and drawn from that to the table. Roughly speaking, most of the ores treated are between 16 and 30 mesh (about 1.0 and 0.5 mm.).

The capacity of the table depends on the size of the ore particles, their specific gravities and the percentage of concentrates. For an easily concentrated coarse ore (say 8 mesh, that is about 2 mm.), it may be 25 to 35 tons in 24 hours; for ordinary stamp mill pulp it is perhaps 15 to 25 tons; but for very fine material it is much less.

The following results were obtained in the course of regular work by the Summit Mining and Smelting Co., Summit County, Colorado, on a quartz-pyrite ore assaying 0.07 ounce gold and 11.2 ounces silver per ton. In 23 hours and 15 minutes 64,000 pounds (32 tons) of ore, which had been crushed by rolls to pass through an 8-mesh screen, were treated on a single table, yielding about 28 tons of tailings, which were re-ground to pass through a 30-mesh screen and were treated in the same time on two other tables. The total amount of concentrates was 12,552 pounds, assaying 0.34 ounce gold and 53.7 ounces silver per ton, 36% iron, 8% zinc, 3% lead, and 4.2% silica. About 69% of the concentrates were obtained from the first table. The final tailings carried a trace of gold and 0.8 ounce of silver per ton. Thus 95% of the gold and 94% of the silver in the ore were concentrated into a clean product, weighing about 20% of the original ore.

At the Butte Reduction Works, a test was made on 1,085 pounds of 3-mm. jig tailings, assaying 1.2 ounces silver per ton, 1.3% copper and 87.2% silica, after grinding to pass through a 20-mesh screen. The concentrates weighed 80 pounds, assaying 8.4 ounces silver per ton, 8% copper and 16.4% silica; the tailings assayed 0.6 ounce silver and 0.5% copper. The concentrates contained 52% of the silver and 45% of the copper in the feed. When the tables had been put in regular running order they treated 30 to 40 tons in 24 hours, and in a

* Private communication from the manufacturers.

little over three months there were obtained from this formerly waste product, 436 tons of concentrates with an average assay of 7.1% copper and 8.1 ounces silver per ton.

At the Parrot Mill, Butte, Mont., a number of tests were made to determine the best length of stroke and number of strokes per minute for re-ground jig middlings that had passed through a box classifier and were of about 20-mesh size. The results are shown in Table 321. In regular work, twenty tons of this

TABLE 321.—TESTS OF A WILFLEY TABLE AT THE PARROT MILL, BUTTE, MONTANA.

Feed.			Concentrates.				Tailings.			Percent of Total Original Value Obtained in the Concentrates.		Strokes per Minute.	Length of Stroke. Inches.
Pounds.	Percent Copper.	Ounces Silver per Ton.	Pounds.	Percent Copper.	Ounces Silver per Ton.	Percent Silica.	Pounds.	Percent Copper.	Ounces Silver per Ton.	Copper.	Silver.		
16,269	4.6	6.1	4,677	13.1	16	18.8	11,692	1.2	1.8	81	75	240	1¼
10,598	4.5	5.5	3,010	14.2	17	20.8	7,588	0.65	0.8	90	88	240	1¼
7,659	4.5	5.6	2,260	13.1	16	24.2	5,399	0.9	1.1	86	84	240	1¼
7,323	4.5	6.0	2,190	13.5	16	26.0	5,133	0.66	0.8	90	80	260	1¼
6,947	4.6	5.1	2,057	13.8	15	24.8	4,890	0.73	0.9	89	87	268	1¼
7,083	4.8	6.0	1,883	15.9	19	19.0	5,190	0.88	1.1	86	88	269	1¼

material were treated in 24 hours, yielding 1.8 tons of concentrates; but the author has not the corresponding assays.

§ 494. The success of the Wilfley table has led to the design of several others which in their general features are like the Wilfley, but differ in details. Those that have been put on the market are described in the following pages:

THE DODD TABLE, which has recently been put upon the market, is nearly

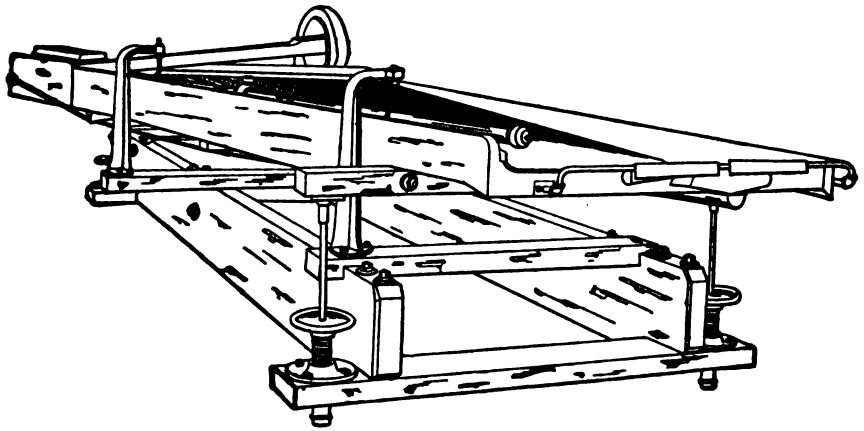

FIG. 394.—HALLETT TABLE.

the same as the Wilfley. One of the chief differences is in the fact that the thick ends of the riffle cleats are in a diagonal line parallel to the line of the thin ends. A diagonal cleat is tacked on, which ends up the deep ends of the riffles. The claim is that this device forces the water to flow down with the ore, and so enables the table to do its work with less water.

THE HALLETT TABLE (Fig. 394) has the tops of the riffles in the same plane as the cleaning plane. This is accomplished either by cutting the riffles as depressions in a plane board surface, or by making the table of two planes with a slight

angle between them, such that the tapered riffles tacked upon the one will bring the concentrating and cleaning planes into one plane.

The riffles, instead of being parallel to the tail side of the table, incline toward the wash-water side as they become shallower, and thus carry the heads and middlings farther away from the tailings discharge. The middlings are discharged from the head end instead of from the tail side; and the launders for catching the different products can be adjusted by sliding them along their supporting rod. The pulp distributor is attached to and shakes with the table, while the wash water is applied from a stationary spray pipe. The table is supported at each corner on a steel rod or toggle 24 inches long, the lower end of which rests in a cup. By screwing these cups up or down in their holders the slope of the table may be varied lengthwise as well as sidewise. The table is generally set with a gentle downward slope toward the heads discharge.

In making a three mineral separation (galena, blende and quartz) Hallett, in Mill 49, first crushes all the ore in a Chili mill to pass through a 60-mesh screen; and then sends it to a hydraulic classifier with three spigots, followed by a box classifier (*spitzkasten*) with six spigots. He has no difficulty in separating galena, pyrite, blende and quartz, making a separate product of each. In separating galena, blende and quartz he obtained the following results:

	Lead.	Zinc.
Ore fed	20%	25%
Lead product	70	2–3
Zinc product	0.9	40

In treating this ore the adjustments are varied to suit the different slime sorts. The slope toward the head end varies from 1 inch to 2½ inches in 16 feet; while the side slope varies from almost nothing to 1 inch in 7 feet. The number of throws varies from 150 to 300 per minute, and the length of stroke from ¼ inch to 1¼ inches. The coarsest ore requires slowest speed, longest stroke, least end slope, and greatest side slope. The total water used on each table is from 5 to 7 gallons per minute. The capacity of the Hallett table in Mill 49 on the 60-mesh stuff is 9 tons in 24 hours. Hallett estimates that on coarser stuff (20 or 30-mesh) it can treat at least 14 tons in 24 hours.

The Woodbury Table is supported by and vibrates upon toggle rods, similarly to the Hallett. To adjust the slope, the main frame is raised or lowered by means of jack screws. The table is the same width at the head end as at the back end. The riffles are parallel to the tailings side of the table, and are graded slightly in length, but the upper one is nearly as long as the lower. There is a short cleaning plane beyond their ends. The wash water is applied by a spray pipe. The driving mechanism consists of a specially designed cam, which gives the desired jerking motion and has an adjustable throw.

At Mill 72, these tables have recently replaced Woodbury vanners to treat gravity stamp pulp at the rate of 15 tons per table in 24 hours, after it has passed over amalgamated plates. The ore carries about 1½% of pyrite, and each table makes 500 pounds of concentrates per day, assaying $65.00 per ton, and the tailings assay $0.38 per ton.

The Cammett Table (Figs. 395*a* and 395*b*) is mounted upon a substantial frame *A*, hinged at one end *B* to the foundation timbers, the other end being supported on jack screws, which serve to vary the longitudinal slope. The transverse slope is adjusted by means of cams, which are keyed to a continuous longitudinal shaft, upon which bear the babbitted slide bearings fastened to the under side of the table top *C*. A similar shaft fixed on the opposite side of the frame A, serves as a support on that side for the table top. There are but four bearings for the entire table top, all maintained in accurate alignment by the construction employed.

The working surface *C* of the table is the same width at the head end as at the back end, and is made of redwood and coated with a special paint, which leaves a surface similar to slate. The riffles, continuous from the back end to the head end of the table, are cut out of solid wood, and not made by tacking on cleats. The depth of the riffles is greatest next to the back end of the table, and

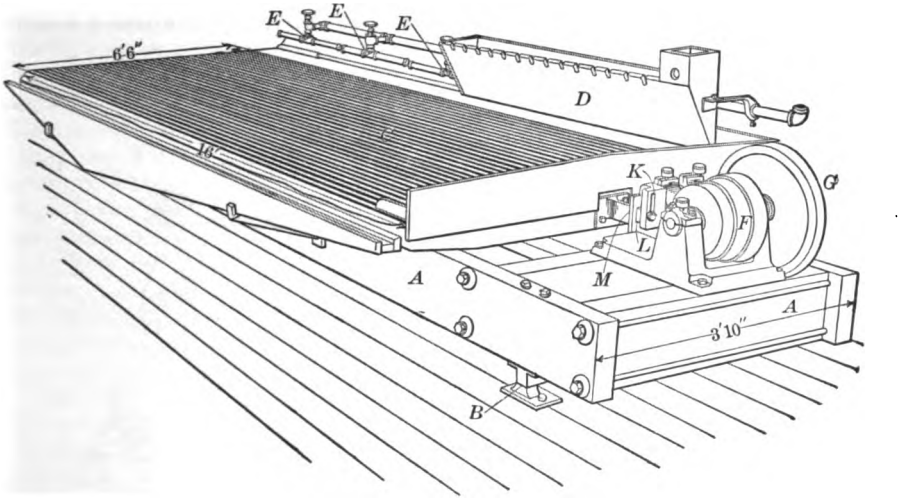

FIG. 395*a*.—CAMMETT TABLE.

gradually diminishes to a certain point near the head end of the table, where it reaches its minimum; thence the same depth to the extreme head end where the concentrates are dischargd.

The feed is distributed by means of the grooves in the edge of the feed-box *D*. The wash water is applied on the feed side from four independent sources *EEE* (the fourth is behind *D*), and thence flows transversely across the table nearly at right angle to the longitudinal reciprocating motion.

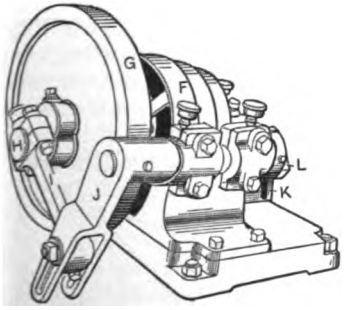

FIG. 395*b*.—DRIVING MECHANISM FOR THE CAMMETT TABLE.

The driving mechanism gives a motion similar to the Wilfley. It consists of a step pulley *F*, fly-wheel *G*, short crank *H*, connecting rod *I*, long crank *J*, and short crank *K*, to which is bolted a sharp-edged piece *L*, which bears against an iron piece M, on the end of the table and transmits the motion. A spring beneath the table (not shown) serves to keep the pieces *L* and *M* in contact and to prevent any backlash in the mechanism. The distance of the piece, *L*, from its shaft is adjustable, thereby regulating the amount of throw. Further adjustment in the amount and character of the throw is obtained by the slot in the crank *J*. It will be seen that this mechanism is the so-called crank-arm mechanism described in § 409. The power required in average practice is from 0.25 to 0.33 horse power, as determined by actual test.

At the Consolidated Stanley Mining Co.'s mill, Idaho Springs, Colorado, jig middlings, after being recrushed by gravity stamps and passed over amalgamated plates, go to a hydraulic classifier, which sends the spigot product to one Cammett table and the overflow to a second. The feed to the first table (about

60 mesh) assays 0.15 ounce gold and 2.4 ounces silver per ton; the concentrates 1.3 ounces gold, 16 ounces silver and 6% lead; with the tailings 0.05 ounce gold and 1.1 ounces silver. The feed to the second table (maximum about 100 mesh) assays 0.2 ounce gold and 3 ounces silver per ton; the concentrates 1.4 ounces gold and 18 ounces silver; with the tailings 0.07 ounce gold and 2 ounces silver.

THE BARTLETT TABLE (Fig. 396*a*) differs from the others of the Wilfley type, in having the washing surface divided into three shelves, each about 1 foot wide

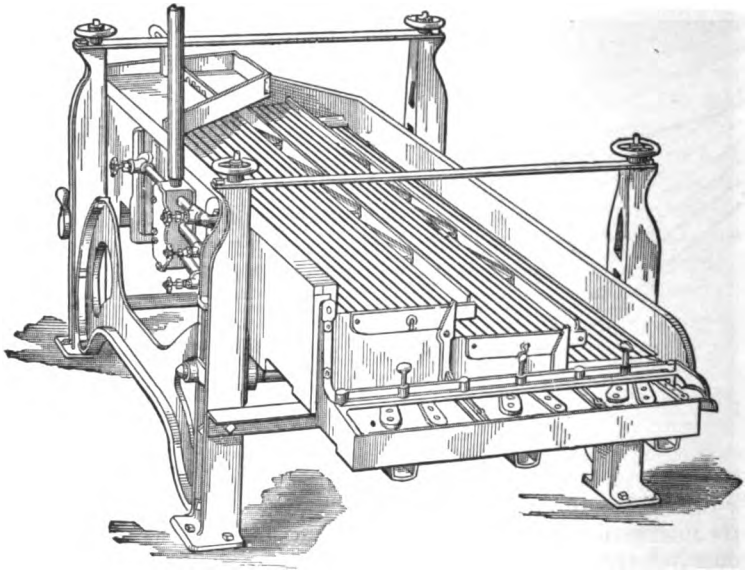

FIG. 396*a*.—BARTLETT TABLE.

and 11 feet long. The tapering riffles are V-shaped, and extend the whole length of the table. The working surface is made of either wood or iron. The tailings from the different points on the lower edge of the first shelf are conducted backward 2 to 4 feet by little sloping spouts, and delivered to the second shelf for re-treatment. The tailings of the second shelf are similarly conducted to the third shelf for final treatment. To prevent very fine sulphurets being carried into the tailings, little or no wash water is used on the first shelf, more is

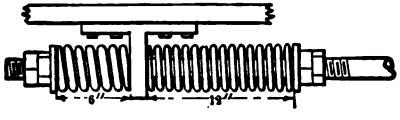

FIG. 396*b*.—DRIVING DEVICE FOR BARTLETT TABLE.

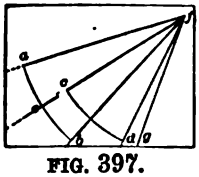

FIG. 397.

used on the second shelf, and most on the third. The main frame is of iron, and the table is carried upon this by means of stirrups and toggles very much like those used on the Embrey vanner (see § 483). The stirrups and toggles are adjustable up and down by means of the little hand-wheel nuts shown at the tops of the posts in Fig. 396*a*. This adjustment controls the slope of the table in all directions.

The table is operated by a plain eccentric. The eccentric rod passes through a lug on the under side of the table (see Fig. 396*b*), and carries, on its outer end, a

coiled steel spring, 6 inches long, 3¾ inches in diameter, made of ¾-inch steel, and adjusted by lock nuts on the eccentric rod. On the other side of the lug is a second coiled spring 12 inches long and 3¾ inches in diameter, made of ½-inch steel and adjusted by lock nuts, on the eccentric rod. The reversal at the forward end of the stroke is controlled by the stiff spring, that at the back end by the weaker spring. This combination fulfils the demands of an excellent vanning motion.

THE OVERSTROM TABLE which has appeared in the year 1901 is the latest form of riffle table. Its shape is that of a geometrical rhomboid. The line of the riffle blocks and the direction of motion of the table are the same, and are nearly parallel to the shorter diagonal of the rhomboid. The designer has really rearranged the Wilfley table so that nearly the whole surface is utilized and the idle corners that existed on the Wilfley between the head end and the wash water side and between the back end and the tailings side are done away with.

COMPARISONS.—In comparing the Wilfley table with its parent, the Rittinger, we find three differences: (1) the great lateral extension of the Wilfley; (2) the riffles; and (3) the vanning motion. The great lateral extension of the Wilfley table spreads out the minerals in wider bands than on the Rittinger, so that there is no undue thickening of the pulp bed along one line tending to harmful directing of the water; it also permits a more exact division of the products. The riffles increase the capacity of the table, because they can catch and convey a large amount of concentrates; they also enable the table to make a two-mineral separation with unclassified pulp almost as perfectly as with classified pulp, whereas on the Rittinger a perfect classification of the feed pulp is essential to success. With unclassified pulp the riffles provide for the coarse grains of concentrates by guiding them out to the point where they join the band of clean concentrates; and they provide for the finer grains by settling them in the riffle spaces, and then the coarse grains plough them along to the concentrates band. When more than two minerals are to be separated, however, the Wilfley requires the same care as the Rittinger in classifying the feed. While the vanning motion of the Wilfley undoubtedly has a more favorable action on the separation of the minerals than the bumping motion of the Rittinger, by keeping the bed softer and more mobile, its chief advantage is that it does not strain and wear the machine nearly so much.

The smooth Wilfley, lately adopted in certain mills, has an advantage over the Rittinger, as already stated, in the great lateral extension and in the gentler vanning motion. It must, however, be fed with classified products. The advantage the riffled Wilfley has over the smooth Wilfley may be thus stated: The behavior of an unclassified product fed upon a smooth Wilfley, which, for example, we will say is treating galena and quartz, is illustrated by Fig. 397. The feed coming on at *f* spreads in two lapping fans, *fab* of galena and *fcd* of quartz. The coarse galena is at *b*, the fine at *a*, the coarse quartz at *d*, the fine at *c*. One of two things can be done to prevent the large middlings product of mixed quartz and galena, between *fc* and *fb*: first, if the feed has passed through a classifier the coarse galena between *e* and *b* has been taken out to be treated elsewhere and the Wilfley makes clean products; second, riffles may be put on, which will force the coarse galena at *b* up to *e*, or nearly so, and the little that fails to get up is caught in the middlings and treated again, so that clean products are made with a small middling product between them. The finest mud, containing heavy mineral that is too fine to settle on a vibrating table, is carried down into the tailings at *g*.

Tables with riffles have the advantage that the weaker grains of concentrates, which fail to be retained in the upper riffles, find in the lower riffles a place where the pulp is more loose and soft, so that they are relatively stronger than

their neighbors, and can therefore be retained and conveyed either into the heads or into the middlings.

The tables wholly covered with riffles, as the Bartlett and Cammett, probably have the greatest capacity of all the tables upon ores with a large percentage of concentrates and upon coarser products. The greater the depth of the riffles up to a point where other complications come in, the greater will be this capacity, and the coarser the grain that can be treated. The tables having a combination of riffles, or concentrating plane, with a smooth or cleaning plane beyond, as the Wilfley, Hallett and Woodbury, are more advantageous for treating products carrying a small amount of concentrates, for treating fines and for making a three-mineral separation, because the separation can be more perfectly completed on the smooth surface (where the particles spread out in fan-like bands with clear lines of demarcation between the different minerals) than in the riffles.

Of the tables having riffles followed by a smooth cleaning plane, those that have the riffles ending on a diagonal line, as the Wilfley and Hallett, have the advantage that the light grains of concentrates which failed to be caught in the upper riffles, but are caught lower down, are carried out and delivered on the cleaning plane more nearly in line with their would-be fellows than if the riffles were all of the same length.

The tables which have the cleaning plane in the same plane with the tops of the riffle cleats, or concentrating plane, as the Hallett, have the advantage that the fan on the cleaning plane will open out much wider and therefore make the separation simpler and easier, particularly when it is a three-mineral separation.

All the tables have the lateral slope adjustable, this adjustment being in constant use. Some also have a longitudinal slope adjustment, which would seem to be an important help for occasional use.

The above combination of improvements, initiated by Wilfley in 1896, has given us the most efficient class of fine concentrators yet produced. The improved design is continually finding new applications—for certain products it has displaced end-bump tables, vanners, slime tables, fine jigs, and is even entering the field of the medium jigs; and it has probably not yet prospected its whole field of usefulness.

II. END-BUMP TABLES.

§ 495. THE GILPIN COUNTY CONCENTRATOR is a continuous working bumping table, with cam, spring and bumping post. The heavy and light minerals are separated into layers by the agitation, and are propelled up the slope of the table by the bumping action, but the wash water carries down the surface quartz at a higher speed than the bump can send it up.

The tables are generally mounted in pairs, each single table being 85 inches long and 18 inches wide. At Mill 77, single tables are used. The lower 68 inches is a flat surface, sloping about $\frac{3}{8}$ inch per foot, while the upper 17 inches rises by a concave cylindrical surface to a height of about 2 inches above the plane of the flat surface. About 3 inches at the upper edge is curved downward for the discharge of the concentrates, the lower edge also being curved down to discharge the tailings. A pair of tables is suspended from four cast iron posts by vertical rods, which have knife-edge bearings. The slope is varied by means of lock nuts on the suspending rods. The posts are bolted to two longitudinal sills, which are, in turn, bolted to four cross sills, three of which are placed at the head of the tables. In the center, at the head end, the bumping block is strongly bolted to the head sills. Between the tables is a heavy buffer rod, on the tail end of which is the tappet for the cam. At the head end it is shod with iron to strike the bumping block. On the two tail posts is a shaft with a driving pulley and a two-armed

cam which pulls the table toward the tail; at release a flat spring in front of the cam pushes the table toward the head end. The bumping block stops the motion suddenly, causing all particles on the table to slide up hill. Side motion of the table is prevented by the posts or by diagonal stay rods. The surface is made of cast iron, steel or copper plate. Cast iron is said to give the best catch, but is very heavy. With cast iron surface, the shaking part weighs 1,100 pounds, with copper 700 pounds, with steel 600 pounds. In Mill 77 an amalgamated copper surface is used, and serves to catch a small amount of gold.

The ore is fed by a box distributor across the junction between the curved and flat parts. Wash water may or may not be used. When used, it is distributed across the table just below the top crest, so that a small amount of wash water will go over with the heads.

The table receives from 120 to 180 shocks per minute. The length of the movement is 1½ inches to 3 inches, the length decreasing as the number increases. In Mill 77, a single table treats 5⅝ tons in 24 hours, the tailings of three of these going to one table for re-treatment. The concentrates carry 10 to 12% of silica. The surface is amalgamated copper plate on wood, and yielded 1 ounce amalgam every two months. The copper lasts one to two years. The data from the mills is given in Table 322.

These tables must be fed with whole pulp without any previous classification. On classified stuff they separate the minerals into layers all right, but the discharge of the heads is impeded, owing to their fineness, because there are no coarse grains of heavy mineral to drag up the fine ones; and on very fine pulp it fails entirely. The maximum size of grain fed to them is generally between 40 mesh (about 0.35 mm.) and 80 mesh (about 0.15 mm.).

THE ELLENBECKER TABLE is 3 feet wide by 6 feet long. It has a wooden bottom covered with copper plate. The lower 3 feet is horizontal, the upper rises 1½ inches in 3 feet. It is suspended on four hinged rods, which serve as guides for longitudinal motion. The table is given a jerking motion by means of a driving shaft (with fly-wheel), eccentric gear transmission (giving accelerated-retarded motion), and eccentrics, the speed being about 130 to 150 jerks of 1 to 2 inches per minute. The jerk throws the grains up the slope; the wash water floats down the surface quartz particles. It is fed across the middle and has little wash water distributed across the top. It treats about 3 tons in 24 hours, maximum size about 60 mesh (about 0.2 mm.). It was used between 1870 and 1880 at Mill 44. Its work is now done by slime tables and Wilfley tables.

IMLAY.—This is an end-shake jerking table, much like the Ellenbecker, but is supported on toggles. It is 4 feet wide and 7½ feet long, and makes 200 oscillations of about ½ inch, which can be varied by cone pulleys.

THE GOLDEN GATE CONCENTRATOR is a jerking table which separates the minerals into layers by agitation, at the same time moving the particles rapidly forward by the jerk. The table is 11 feet long and 4 feet wide. It has a slight down slope for about 7 feet from the feed end, and then rises about 4 feet to the end where the heads are discharged. The heads receive a final cleaning by a stream of clear water as they are jerked up this second slope. The tailings are removed by suction at the point where the direction of slope changes. Above the washing surface there is a frame with wire nail points projecting downward about 2 inches apart. This frame is given a side vibration at the same time that the table receives its end jerk, the result being that the nail points describe curved paths in the pulp bed, and so prevent any banking of the ore. The table is driven by the sliding block mechanism (see § 408), and receives 260 short vibrations per minute. While the capacity is very large the first cost is high ($1,700), and the tailings carry considerable fine concentrates. At Oldham, Nova Scotia, it treated gravity stamp pulp, which had passed over amalgamated plates, at

TABLE 322.—BUMPING TABLES.

Mill Number.	Kind of Table.	Length. Inches.	Width of Each Half. Inches.	Kind of Surface.	Slope. Inches per Foot.	Slope. Degrees.	Shakes. Number per Minute.	Shakes. Length. Inches.	Feed. Source.	Feed. Maximum Size. Mm.	Destination of Heads.	Destination of Middlings.	Destination of Tailings.
25	Parsons..	89	39	Enamel (*a*).	0.94	4° 30′	148	3/4	(*d*)	.....	Smelter..	(*v*)	Waste.
66	" ..	89	39	"	0.94	4° 30′	144	1/2	(*e*)	.....	" ..	(*v*)	"
70	Gilpin.....	.....	.....	.....	.....	.....	.....	.....	(*o*)	.....	" ..	.....	"
77	"	85	18	.....	.....	.....	.....	.....	(*o*)	.....	" ..	.....	"
	" No. 1	.....	.....	Copper (*b*).	.....	.....	150	2 3/4	(*r*)	.....	" ..	.....	(*w*)
	" No. 2	.....	.....	Cast iron..	.....	.....	120	1 1/2	(*s*)	0.38	" ..	.....	Waste.
	" No. 1	85	18	.....	.....	.....	.....	.....	(*c*)	.....	" ..	.....	"
	" No. 2	85	18	.....	.....	.....	.....	.....	(*o*)	.....	" ..	.....	"
85	" No. 3	85	18	.....	.....	.....	.....	.....	(*g*)	.....	" ..	.....	"
	" No. 4	85	18	.....	.....	.....	.....	.....	(*h*)	.....	" ..	.....	"
	" No. 1	85	18	Steel.....	.....	.....	180	1 1/2	(*f*)	1.25	" ..	.....	(*x*)
	" No. 2	85	18	Cast iron ..	.....	.....	150	1 1/4	(*s*)	40 mesh	" ..	.....	Waste.
	" No. 3	85	18	" ...	.....	.....	150	2 1/4	(*i*)	0.88	" ..	.....	No. 6 table
86	" No. 4	85	18	" ...	.....	.....	150	2	(*k*)	.....	" ..	.....	Waste.
	" No. 5	85	18	" ...	.....	.....	140	1 3/4	(*m*)	.....	" ..	.....	"
	" No. 6	85	18	Steel.....	.....	.....	140	1 3/4	(*t*)	0.88	No. 4 jig.	.....	"
88	"	85	18	.....	.....	.....	.....	.....	(*o*)	.....	.....	.....	.....

(*a*) Enameled duck. (*b*) Amalgamated copper. (*c*) Spigots of surface current classifier. (*d*) Spigots of No. 5 surface current classifier. (*e*) Spigot of No. 1 whole current classifier. (*f*) Spigot of No. 1 hydraulic classifier. (*g*) First spigot of No. 2 hydraulic classifier. (*h*) Second spigot of No. 2 hydraulic classifier. (*i*) First spigot of No. 3 hydraulic classifier. (*k*) Second spigot of No. 3 hydraulic classifier. (*m*) Third spigot of No. 3 hydraulic classifier. (*o*) Gravity stamps. (*r*) Blanket table tailings. (*s*) Tailings of preceding table, with coarse screened out. (*t*) Tailings of No. 3 table. (*v*) No. 1 whole current classifier. (*w*) Following table. (*x*) 40-mesh riddle.

the rate of 24 to 30 tons in 24 hours, yielding 1,000 to 1,200 pounds of concentrates assaying $70 per ton, and tailings assaying $0.50 to $0.54 a ton. The values in this ore, however, were not carried by the fine arsenopyrite. If they were the tailings would have been much richer.

COMPARISON OF SIDE-BUMP AND END-BUMP TABLES.—The tables with side bump throw all the particles toward the side, while the water current rolls them down hill at rates varying with the size of the grains and their specific gravity, the larger and lighter grains moving faster than the smaller, heavier grains. The combination of these actions yields the particles spread out like a fan, and it follows that the table can turn out heads, middlings and tailings or it may yield more than three products, for example, galena, pyrite, blende and quartz, each quality of mineral being guided into its own catch box. The end-jerking tables, on the other hand, separate the particles into layers, then by the jerk throw them toward the head end, and between the jerks the water rolls the grains in the top quartz layer toward the tail end. By rightly adjusting the slope the pyrite is jerked up hill and the quartz is rolled down hill. It follows that machines of this class can make only heads and tailings; and if it is desired to make middlings, with a view of producing cleaner heads, or to make a three-mineral separation, then two tables must be used, one following the other. The first will yield the galena, for example, as heads, and the blende and quartz will go together into the tailings; the second table, re-treating these tailings, will make blende as heads and quartz as tailings. This combination will give a much less perfect result, however, than the Wilfley or Stein, working upon sorted products.

MISCELLANEOUS MACHINES USING AGITATION.

§ 496. THE SALZBURG TABLE is a bumping, intermittent table, 3.8 m. (12 feet 6 inches) long, 1.5 m. (4 feet 11 inches) wide, which builds up a bank of ore and requires to be stopped and shoveled out from time to time, when heads and middlings have collected sufficiently. The tailings pass off to waste, over the open tail end, while the table is working. It is suspended from four rods. A

cam draws the table toward the tail, and a spring, at release, pushes it toward the head, against a bumping post. It usually makes 70 to 80 throws a minute, of 13 to 20 mm. in length, consuming 0.7 to 1.1 horse power. It slopes about 2°, which is adjusted as the ore bed builds up. It should be fed with a sorted product. Though an old table, it still finds favor in Germany on account of its successful treatment of the coarse slimes. Tests at Przibram, Bohemia, showed it to save 20% more silver and 30% more lead from coarse slimes than the Rittinger table.[15] It uses less water than the latter, and so loses less fine mineral. It requires much attendance.

One table works 800 pounds an hour of coarse meal using 3.74 gallons water a minute; one table works 400 pounds an hour of middle meal using 2.47 gallons water a minute; one table works 200 pounds an hour of fine meal using 1.87 gallons water a minute; one table works 60 to 100 pounds an hour of slimes using 0.94 gallon water a minute.

THE HENDY CONCENTRATOR is a shallow, circular pan, 5 or 6 feet in diameter and about 8 inches deep, with a slightly convex conical bottom, pivoted at the center and given a circular oscillating movement of about 1 to 2 inches, 215 to 225 times per minute. The ore is fed all around the circumference by revolving spray feeder arms. The agitation settles the pyrite to the bottom, the quartz rising to the surface. The former is collected by centrifugal force in a groove around the circumference and is discharged through a little gate, which is regulated to suit the ore. The quartz is carried by the water toward the center of the pan and overflows inward to a discharge spout. The depth of the water is of course greater at the circumference than at the center. The machine will treat about 4 tons in 24 hours. It was formerly much used, but has been displaced by vanners. A machine similar to this is used at the Mayflower mill, Idaho Springs, Colorado, to treat re-stamped jig middlings. It consists of a pan 2 feet 6 inches diameter, 1 foot deep, oscillating on a central pivot. It is fed at the center from a hopper, through a downwardly expanding cone, which causes the sand to assume the condition of hindered settling. The tailings are discharged at the circumference and go to Gilpin County bumping tables, while the concentrates are discharged through four adjustable gates in the bottom, and sent to the smelting works.

THE MECHANICAL BATEA is used for washing away the fine, light stuff from the charge of the clean up barrel in amalgamating mills. That used in Mill 72 is a pan 36 inches in diameter, with the bottom a spherical surface having its center 4 inches below the margin. The pan has vertical sides 4 inches high, with an annular rim 1¼ inches wide, extending horizontally inward from near the top of the sides, to prevent slopping. It is suspended by three rods 12 feet long with turnbuckles for leveling. The pan receives a gyrating motion by a central crank beneath, with a radius of 1½ inches, and makes about 40 revolutions per minute, requiring about 1 horse power. The discharge nozzle, which is held between guides, prevents the pan from revolving. The charge is fed at one side, and the light stuff overflows at the opposite side, through a nozzle whose sole is level with the bottom margin of the pan. It yields: (*a*) Overflow to amalgamating plates and (*b*) residue to hand pan for further cleaning, which yields: (1) Amalgam, retorted; (2) mercury, goes back to mill; (3) scrap iron, waste; (4) lump ore, back to stamps; (5) rich concentrates, to chlorination works.

The Fulton Iron Works, the Hendy Machine Works and the E. P. Allis Co. each advertise a batea supported by two rods at the back and a roller under the discharge nozzle, and applying the power by a crank at the side opposite to the nozzle (see Fig. 398).

TABLE 323.—SLIME TABLE CONSTRUCTION AND OPERATION.

Abbreviations.—Ft. = Feet; In. = Inches; L. = Lower; No. = Number; ta. = table; tr. = trommel.

Mill and Table No.	Kind.	Diameter. Ft. and In.	Slope. Inches per Foot.	Slope. Degrees.	Time of One Revolution in Seconds.	Kind of Surface.	Method of Feeding.	Application of Tailings Wash Water.	Application of Middlings Wash Water.	Application of Heads Wash Water.	Fed from	Destination of Heads.	Destination of Middlings.	Destination of Tailings.
15–1	A_1	18	1.05	5° 0′	125	Cement	B_1	B_1	B_{10}	B_{21}	C_2	Smelt'r	No. 3 ta..	Waste.
2	A_1	18	1.05	5° 0′	125	"	B_7	B_7	"	"	C_4	"	" ..	"
3	A_1	18	1.05	5° 0′	125	"	B_7	"	.....	"	C_{15}	"	Returned	"
21	A_4	14	0.94	4° 20′	41	"	B_2	B_{20}	B_{20}	B_{20}	C_3	"	E_1	"
22	A_2	18	1.05	5° 0′	.....	Wood..	B_2	B_2	B_{10}	B_{21}	C_2	"	No. 1 tr..	"
		18	1.05	5° 0′	.....	" ..	B_5	"	"	"	C_4	"	"	"
23–1	A_1	16	1.25	6° 0′	.....	" ..	"	.....	B_{10}	"	C_3 & C_4	"	E_2	"
2	A_1	16	1.25	6° 0′	.....	" ..	"	.....	"	"	C_5	"	"	"
24–1	A_1	18	1.25	6° 25′	75	" ..	"	.....	.....	.....	C_{15}	"	E_2	"
2	A_1	18	1.25	6° 25′	75	" ..	"	.....	.....	.....	C_{16}	"	"	"
3	A_1	18	1.25	6° 25′	75	" ..	"	.....	.....	.....	C_{20}	"	"	"
4	A_1	18	1.25	6° 25′	79	" ..	"	.....	.....	.....	C_{21}	"	"	"
		18	1.33	6° 20′	155	.....	.....	.....	.....	.....	C_{16}	"	None	M. deck
27	A_6	18	1.94	5° 55′	155	.....	.....	.....	.....	.....	C_{24}	"	L. deck..	Waste.
		20	0.72	3° 25′	155	.....	.....	.....	.....	.....	C_{16} & C_{27}	"	Vanners..	"
28–1	A_6	15–6	1.74	8° 15′	150	.....	.....	.....	B_{10}	B_{21}	C_2	"	E_2	"
		15–6	1.87	6° 30′	150	.....	.....	.....	"	"	C_4	"	"	"
2	A_6	15–6	1.56	7° 30′	150	.....	.....	.....	.....	.....	C_{20}	"	"	"
		15–6	1.05	5° 0′	150	.....	.....	.....	.....	.....	C_{15}	"	"	"
29	A_1	D_1	.....	.....	.....	.....	.....	.....	.....	.....	C_1	"	Returned	"
30–1	A_2	18	1.26	6° 0′	74	Wood..	B_2	B_2	.....	.....	C_2	"	L. deck..	"
		18	1.26	6° 0′	74	" ..	"	"	.....	.....	C_{27}	"	.....	"
2	A_2	18	1.26	6° 0	74	" ..	"	"	.....	.....	C_3	"	L. deck..	"
		18	1.26	6° 0′	74	" ..	"	"	.....	.....	C_{27}	"	.....	"
3	A_2	18	1.26	6° 0′	74	" ..	"	"	.....	.....	C_{16}	"	L. deck..	"
		18	1.26	6° 0′	74	" ..	"	"	.....	.....	C_{27}	"	.....	"
31–1	A_2	18	1.125	5° 20′	56	" ..	B_2	B_2	B_{14}	B_{13}	C_7	"	L. deck..	"
		18	1.125	5° 20′	56	" ..	"	"	"	"	C_{27}	"	Vanners..	"
2	A_2	18	1.125	5° 20′	56	" ..	B_4	B_2 & B_{13}	B_{13}	"	C_{17}	"	L. deck..	"
		18	1.125	5° 20′	56	" ..	"	"	"	"	C_{27}	"	Vanners..	"
		18	1.125	5° 20′	.....	.....	"	"	"	"	C_{18}	"	L. deck..	"
32–1	A_2	18	1.125	5° 20′	.....	.....	"	"	"	"		"	L. deck..	"
		18	1.125	5° 20′	.....	.....	"	"	"	"	C_{27} & C_{28}	"	Vanners..	"
		18	.....	.....	.....	.....	"	"	"	"	C_{19}	"	L. deck..	"
2	A_2	18	.....	.....	.....	.....	"	"	"	"		"	L. deck..	"
		18	.....	.....	.....	.....	"	"	"	"	C_{27} & C_{28}	"	Vanners..	"
		18	1.25	5° 57′	.....	.....	"	"	"	"	C_{19}	"	L. deck..	"
3	A_2	18	1.25	5° 57′	.....	.....	"	"	"	"		"	L. deck..	"
		18	1.25	5° 57′	.....	.....	"	"	"	"	C_{27} & C_{28}	"	Vanners..	"
33	A_2	18	0.96	4° 35′	.....	Wood..	.....	.....	.....	.....	C_6	L. deck.	.....	"
		18	0.75	3° 35′	.....	" ..	"	.....	.....	.....	C_{27}	Smelt'r	.....	"
34	A_2	17–6	.....	.....	70	" ..	"	.....	.....	.....	C_1	"	L. deck..	"
		17–6	.....	.....	70	" ..	"	.....	.....	.....	C_{27}	"	Vanners..	"
35–1	A_2	18	1.25	5° 57′	70	Wood..	B_4	B_2 & B_{13}	B_{13}	B_{22}	C_{13}	"	L. deck..	"
		18	1.25	5° 57′	70	" ..	"	"	"	"	C_{27}	"	No. 5 tr..	"
2	A_2	18	1.5	7° 10′	58	" ..	"	.....	.....	.....	D_2	.....	.....	.....
		18	1.5	7° 10′	58	" ..	"	.....	.....	.....	C_{14}	Smelt'r	No. 5 tr..	Waste.
36	A_1..	18	1.0	4° 45′	.....	" ..	"	.....	.....	.....	C_2	Vanner	None	"
37	A_6	16	1.125	5° 20′	70	" ..	B_2	B_{12}	B_{13}	B_{21}	C_{22}	Smelt'r	L. deck..	Vanner
		16	1.125	5° 20′	70	" ..	"	"	"	"		"	"	"
		16	1.25	5° 57′	70	" ..	"	"	"	"	C_{27} & C_{28}	"	None	"
38	A_2	17	1.25	5° 57′	115	D_3	"	B_2	B_{11}	"	C_{17}	"	"	"
		17	1.25	5° 57′	115	D_3	"	"	"	"		"	"	"
42–1	A_2	18	0.75	3° 35′	80	Wood..	"	"	B_{13}	B_{22}	C_{16}	"	"	No. 3 ta.
		18	0.75	3° 35′	80	" ..	"	"	"	"		"	"	"
2	A_1..	18	0.75	3° 35′	80	" ..	"	"	"	"		"	"	"
3	A_1..	18	0.75	3° 35′	80	" ..	"	"	"	"	C_{26}	"	"	Waste.
43–1	A_7	18	1.125	5° 20′	80	" ..	"	B_{12}	B_{10}	B_{21}	C_2	"	L. Deck..	"
		18	1.125	5° 20′	80	" ..	"	"	"	"	C_{27}	"	Vanner...	"
2	A_2	18	1.0	4° 45′	80	" ..	"	"	"	"	C_3	"	L. deck..	"
		18	1.0	4° 45′	80	" ..	"	"	"	"	C_{27}	"	Vanner..	"
3	A_7	18	1.125	5° 20′	80	" ..	"	"	"	"	C_{10}	"	L. deck..	"
		18	1.125	5° 20′	80	" ..	"	"	"	"	C_{27}	"	Vanner..	"
4	A_2	18	1.0	4° 45′	80	" ..	"	"	"	"	C_{11}	"	L. deck..	"
		18	1.0	4° 45′	80	" ..	"	"	"	"	C_{27}	"	Vanner..	"
44–1	A_2	17–8	1.56	7° 25′	60	" ..	B_6	B_2	B_{15}	B_{17}	C_{23}	"	No. 2 ta..	"
		17–8	1.56	7° 25′	60	" ..	"	"	"	"	C_{27}	"	" ..	"
2	A_2	17–8	1.56	7° 25′	60	" ..	"	"	"	B_{15}	C_{24}	"	None	"
		17–8	1.56	7° 25′	60	" ..	"	"	"	"	C_{27}	"	"	"
45	A_1..	.....	.....	.....	.....	" ..	B_7	B_7	B_7 & B_{15}	B_{17}	C_{25}	Kieve.	Returned	"
46	A_1..	19–4	1.25	5° 57′	60	" ..	"	"	"	"	"	"	"	"
47	A_1..	17–9	1.25	5° 57′	.....	" ..	B_6	B_6	B_{15}	B_{15}	"	"	"	"
48	A_1..	19–0	1.25	5° 57′	60	" ..	B_7	B_7	B_7 & B_{15}	B_{15}	"	Smelt'r	"	"
86	A_1..	16	1	4° 45′	85	Cement	B_1	B_1	B_{10}	"	C_{30}	"	"	"

A_1, Convex conical, revolving. A_2, Convex conical, revolving double deck. A_3, Convex conical, revolving three-deck. A_4, Convex conical, stationary. A_5, Revolving double deck, concave above and convex below. A_6, Three deck; upper deck concave revolving, middle deck convex revolving, lower deck convex, stationary. A_7,

Digitized by Google

Clark convex step table. B_1, Central cup. B_2, Central cup and fixed cone. B_3, Central cup and flat apron. B_4, Fan distributor and revolving cone. B_5, Fan distributor and fixed cone. B_6, Fan distributor, fixed cone and apron. B_7, Evans dead head. B_8, Revolving feeder. B_9, Spray pipe delivering on central cone. B_{10}, Spray pipe. B_{11}, Straight diagonal spray pipe. B_{12}, Curved diagonal spray pipe. B_{13}, Diagonal jet pipe, $\frac{1}{16}$-inch jets. B_{14}, Diagonal jet pipes, seven $\frac{1}{16}$-inch jets, 2 inches apart. B_{15}, Straight jet pipe. B_{16}, Straight jet pipe, six $\frac{3}{16}$-inch jets. B_{17}, Straight jet pipe, four $\frac{3}{16}$-inch jets. B_{18}, Straight jet pipe, two $\frac{1}{4}$-inch jets. B_{19}, Curved jet pipe. B_{20}, Revolving pipe. B_{21}, Radial jet pipe. B_{22}, Radial jet pipe, $\frac{1}{16}$-inch jets. B_{23}, Radial jet pipe, $\frac{1}{4}$-inch jets. C_1, Overflow of hydraulic classifier. C_2, Third spigot of No. 1 hydraulic classifier, and overflow of No. 2. C_3, First spigot of No. 1 surface current classifier. C_4, Second spigot of No. 1 surface current classifier. C_5, Third, fourth and fifth spigots of No. 1 surface current classifier. C_6, Spigots of No. 1 and No. 2 surface current classifier. C_7, Spigots of No. 2 and No. 3 surface current classifiers. C_8, First spigot of No. 1 whole current classifier. C_9, Second spigot of No. 1 whole current classifier. C_{10}, Third spigot of No. 1 whole current classifier. C_{11}, Fourth spigot of No. 1 whole current classifier. C_{12}, Coarse spigots of No. 1 whole current classifier. C_{13}, Spigots of No. 1 whole current classifier. C_{14}, Fine spigots of No. 1 whole current classifier. C_{15}, Spigot of No. 1 whole current classifier. C_{16}, Spigot of No. 2 whole current classifier. C_{17}, Spigots of No. 1 and No. 2 whole current classifiers. C_{18}, First spigot of No. 2 whole current classifier. C_{19}, Second spigot of No. 2 whole current classifier. C_{20}, Third spigot of No. 2 and spigot of No. 3 whole current classifier. C_{21}, Spigot of No. 4 whole current classifier. C_{22}, First spigot of No. 1 box classifier. C_{23}, Spigots of distributing tank. C_{24}, Tailings of upper deck. C_{25}, Tailings of No. 1 and No. 2 tables. C_{26}, Middlings of No. 1 table. C_{27}, Middlings of upper deck. C_{28}, Middlings of middle deck. C_{29}, Middlings of all the tables. C_{30}, Overflow of hydraulic classifier, through an unwatering box. D_1, Three separate tables, which are 10, 14 and 16 feet diameter respectively. D_2, This deck was not used. D_3, Some wood and some rubber. E_1, Huntington mill. E_2, No. 1 surface current classifier. E_3, No. 2 whole current classifier. E_4, By pump to upper deck of No. 2 table.

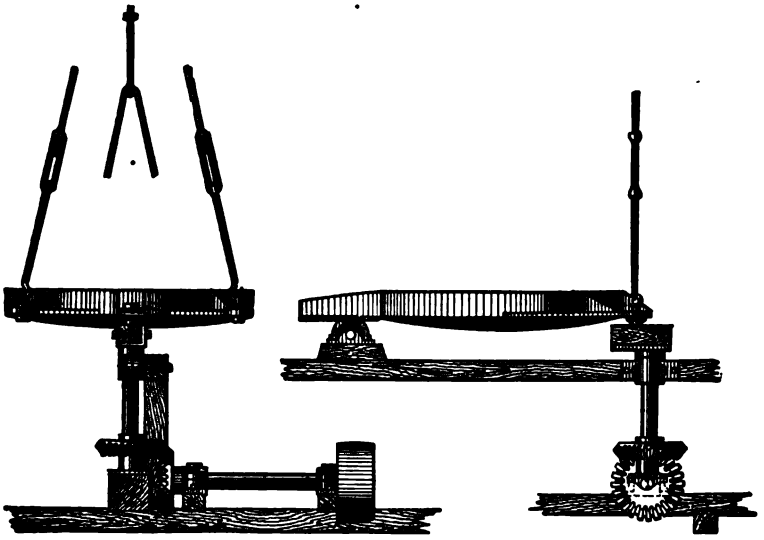

FIG. 398.—MECHANICAL BATEA.

C. FILM-SIZING TABLES.

Film-sizing tables use the relative transporting power of a film of water flowing on a quiet surface (which may be either smooth or rough), to act upon the particles of a water-sorted product. The smaller grains, of higher specific gravity, are moved down the slope slowly or not at all by the slow under current; the larger grains, of lower specific gravity, are moved rapidly down the slope by the quick upper current.

These tables may be classified as:

I. *Surface tables,* from which the products are removed before they have formed a bed, so that the washing is always done on the same surface.

II. *Building tables or buddles,* on which the products accumulate to a depth of several inches and are then removed by hand.

The surface tables may be sub-divided into (*a*) continuous machines, which discharge their products automatically without stopping, and (*b*) intermittent machines, which must be stopped periodically to remove the products.

Data on both kinds of surface tables, as obtained from the mills, are given in Table 323.

Ia. CONTINUOUS SURFACE TABLES.

Continuous surface tables include the circular tables with revolving parts,

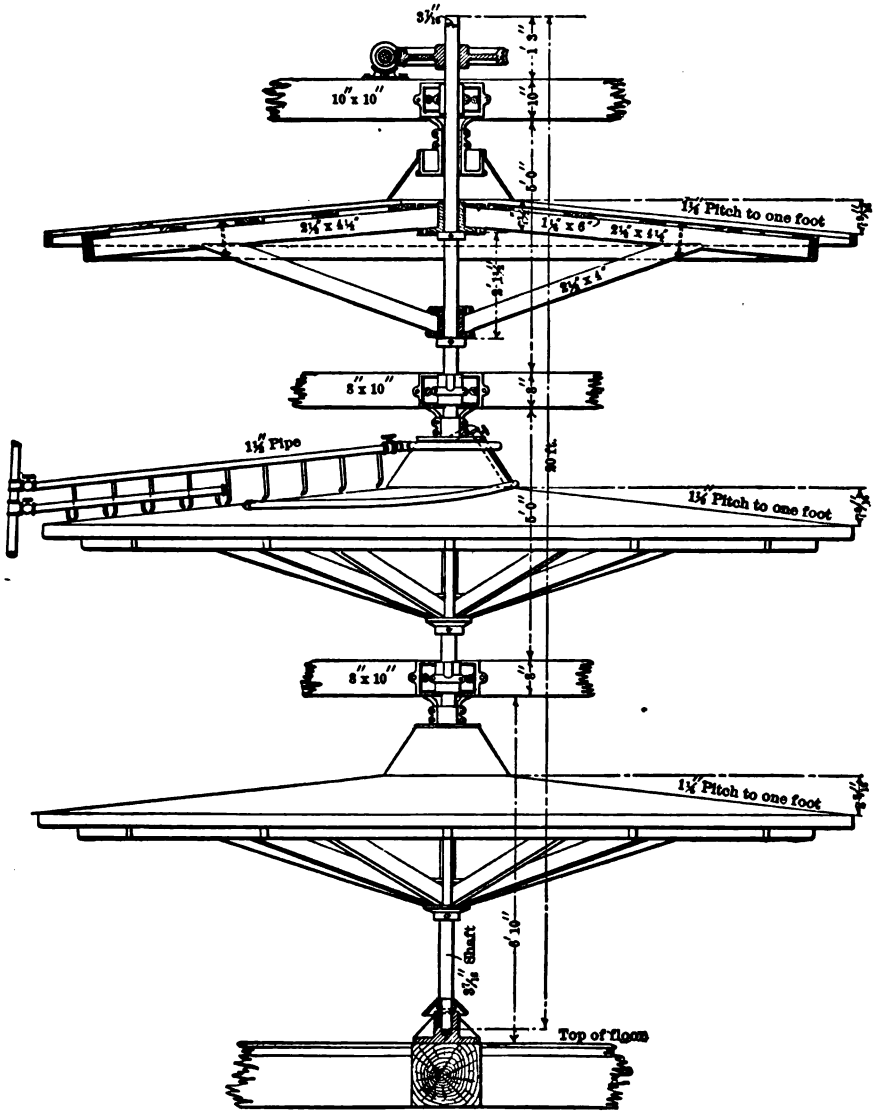

FIG. 399*a*.—ELEVATION OF THREE-DECK SLIME TABLE AT MILL 37.

and the traveling non-vibrating belts, all of which discharge their products automatically and continuously.

§ 497. REVOLVING CIRCULAR CONVEX SLIME TABLES have the form of a very much flattened cone with its axis vertical and its center higher than its margin.

Pulp is fed over a portion of the surface on the pulp or sand side of the table near the center, and as it flows down the slope it spreads out, and the film becomes thinner, loses carrying power and increases in settling power. The revolution of the table continually carries the pulp round past a series of clean water distributors, on the washing side, which wash and remove the different products most advantageously as to place, time and manner, the different products being caught in separate launders around the circumference.

As a good example of modern construction the three-deck table in Mill 37 is here described. By three decks is meant three tables one above the other on a single shaft. This table, made by the Tuttle Manufacturing and Supply Co.,

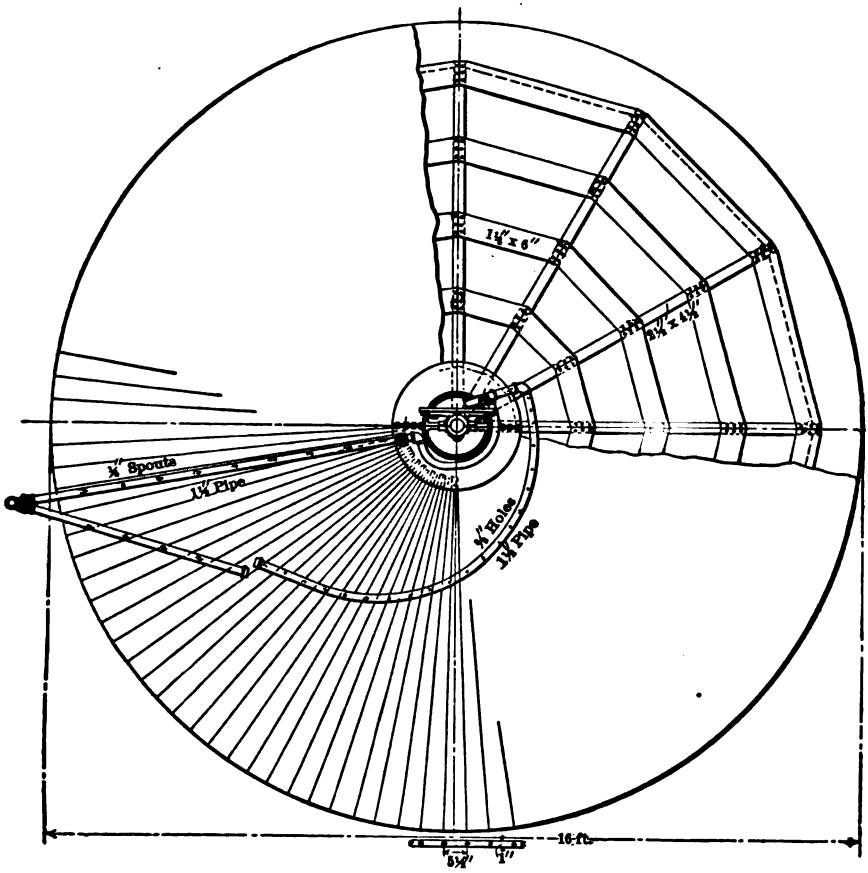

FIG. 399*b*.—PLAN OF THREE-DECK SLIME TABLE AT MILL 37.

is shown in Figs. 399*a* and 399*b*. It has a main frame of four horizontal timbers, one above the other, connected by end posts. The lowest acts as a sill and also carries the step; the other three carry boxes for the vertical shaft; and in the spaces between these four bearings are placed the three decks or tables. Each deck consists of an umbrella frame with twelve rays and twelve supporting braces. Each table has one socket hub for the rays and one for the braces, and the socket hubs are fastened to the $3\frac{7}{16}$-inch shaft by set screws. The rays of the two upper decks are set at a slope of $1\frac{1}{8}$ inches per foot (5° 21′), those of the lower deck at $1\frac{1}{4}$ inches per foot (5° 57′). The rays are united by

planks laid as chords of circles, and there are five of these chord rings. Their surfaces are planed to a true cone for the support of the boards which form the washing surface. The outer ring in this table is stiffened by a ring of boards on edge, which prevent sagging of the surface between the rays. The surface boards, which are commonly of white pine, are sawed of the proper sector to lay them radially, are tongued and grooved, and then nailed in place. The surface is brought to a true conical form by a hand plane, and water is then turned on the table. This whole operation, from the time the log is taken from the pond of the saw mill till the water is turned on the table, is done as rapidly as possible, to prevent the boards from drying, shrinking and warping. The slightest warp spoils the work of the table, as it makes gutters of quick water conveying the heads down too far and ridges of slow water holding back the tailings from rolling down as they should. A table of this kind once made should never be allowed to dry.

The feed pulp is distributed by a central cone with 45° slope, which is fixed to the main frame and therefore does not revolve. This cone has upon it a split cup feed, that is, a cup divided into halves by a vertical partition. One half feeds pulp to one side of the table, while the other can feed clear wash water to the other side of the table. In this mill, however, the wash water cup is not used, the wash water being applied from a spiral spray pipe which has 21 jets $\frac{3}{8}$ inch in diameter, about 5 inches apart, directed vertically downward. These jets keep pushing the quartz down hill, while allowing any concentrates that are sufficiently cleaned to pass between them. A straight spray pipe inclined 30° from the radius, with five jets of $\frac{1}{4}$-inch pipe 9 inches apart, directed tangentially and opposed to the direction of the table, is provided for washing off the middlings; and to remove the heads there is a radial pipe with 9 jets of $\frac{1}{4}$-inch pipe set 9 inches apart and directed obliquely against the motion of the table. There is also a pipe to dilute the feed pulp in case sufficient water is not fed with the pulp. The author would advise connecting all these pipes to the hydrant by separate valves to give independent regulation. The table is given very slow speed (one revolution in 70 seconds in this case) by worm gear. It is surrounded by a circular launder which catches everything that runs off. This launder is partitioned to catch the tailings, middlings and heads separately and each compartment has its own spouts for continuous discharge of its product. These partitions are placed to suit the quality of products.

The discharge edge of a circular slime table should be rounded. If it is square, a bead of water and sand will always rest upon and be carried forward by it, and in this way quartz may be carried into the heads. This bead sometimes goes so far as to produce on the table a solid bank of imperfectly washed material.

Instances of other tables are as follows: In Mill 22 the pulp is fed upon nearly half the circumference of a fixed cone by a fan-shaped distributor having radiating partitions. The cone is fastened to the main frame with its base 2 inches above the table. Wash water is delivered upon this cone for nearly the remaining half of the circumference. Middlings are washed off the lower 4 feet of the table by a straight diagonal pipe with $\frac{1}{8}$-inch jets 2 inches apart. The concentrates are removed by a single $\frac{1}{4}$-inch jet from a $1\frac{1}{2}$-inch pipe.

The tables used in Mill 44 have a fan-shaped feed trough, a cone revolving with the table for distributing pulp, a circular spray pipe for the wash water, a diagonal spray pipe for the middlings, and four $\frac{3}{16}$-inch jets for washing off the heads.

In Mill 30 fourteen rays are used for the frame, and the tables are mounted with two decks on a 3-inch shaft, and the socket hubs are keyed to the shaft. The tables, which are 18 feet in diameter, are fed from a split cup feeder,

which distributes upon a flat cone 8 feet in diameter and slightly steeper (9° 45′) in slope than the table (6°). This feeder discharges through fourteen ¾-inch holes around its lower circumference (seven for pulp and seven for wash water), instead of overflowing as is more common.

The tables used in Mill 15 have sixteen rays, and the chord rings are of boards laid close together. Upon these boards a cement surface is made by driving in nails at frequent intervals, leaving the heads about ½ inch above the wood to hold the cement in place. A layer of coarser cement gives a foundation for a smooth surface of finer cement, the two together being about an inch thick. When complete and dried, the surface is varnished. It has the advantage that it is truer than wood and can be allowed to dry without warping.

The Evans table has a split cup feeder, and a fixed wide feed apron with slightly steeper slope than the table. On the feed side the apron has a circular margin with a radius of 3 feet 8 inches. On the wash water side the apron has a spiral margin beginning with a radius 2 inches less and ending with a radius 1 foot 4 inches more than on the feed side. The diameter of the table is 19 feet. These dimensions are from Mills 46 and 48. The object of this spiral wash water stream is to push the quartz down the table systematically, thus doing away with any slight gutters and ridges that the imperfections of the table have formed. The middlings are washed off by a diagonal spray pipe, and the heads by two or three powerful jets with a board scraper to concentrate the stream and clean and true up the surface.

The Clark table, used at Mill 43, has its conical surface divided into eleven annular steps, each 8 inches wide, and the drop from one step to the next is about ½-inch. This table is fed on a quarter of its circumference by a cup and cone feeder. Each step has its own wash water jet. To each cock is attached a rubber hose 12 to 18 inches long which is directed, by a clamp upon a rod with universal movement, so as to allow a band of pure mineral, formed by the previous jet, to pass while the jet pushes the sand to the next step.

The Schranz table[31] is fed, washed and cleaned off twice during each revolution. The wash water is applied from two spiral spray pipes, the jets of which are directed against vertical spiral splash plates, the wash water falling vertically from these upon the table.

Summary of the Devices Used on Revolving Convex Tables.—There are four parts of the slime table which vary in different designs, namely, the devices for feeding the pulp and the wash water, and those for the removal of the middlings and the heads. The removal of the tailings is practically the same on all tables. Pulp may be fed to a revolving 45° cone built upon and revolving with the table; to a fixed cone attached to the main frame; or to one-half of a split cup attached to the main frame and combined with a fixed 45° cone or a fixed apron, the pulp simply flowing over the edge of the cup and down the cone or apron. The wash water may be supplied by a spiral spray pipe playing directly upon the surface of the table, each stream having its own regulating cock; by a circular spray pipe playing upon a 45° central cone; or by the split cup with a fixed spiral or circular apron. The middlings may be washed off by a straight or curved spray pipe placed at a slight diagonal angle with the radius of the table. The heads are washed off by more powerful jets varying from one large to nine smaller jets. Where the one or two larger jets are used they must be combined with the board scraper to prevent the dissipation of the force of the stream. Where the larger number of smaller jets are used they are directed diagonally toward the edge of the table and opposite to the direction of rotation. The tailings are washed off partly on the feed side of the table and partly on the wash water side, probably more on the former than on the latter.

§ 498. FIXED, CIRCULAR CONVEX SLIME TABLES.—*The Linkenbach fixed con-*

ical table, designed in 1878, claims the advantage that so difficult a construction as a conical cement surface can be made and maintained truer upon a solid foundation than upon a revolving frame. In constructing the table[9] the foundation is made either of concrete or of rough stone laid in cement. This masonry is brought to an approximately true surface, and the final finished surface is ob-

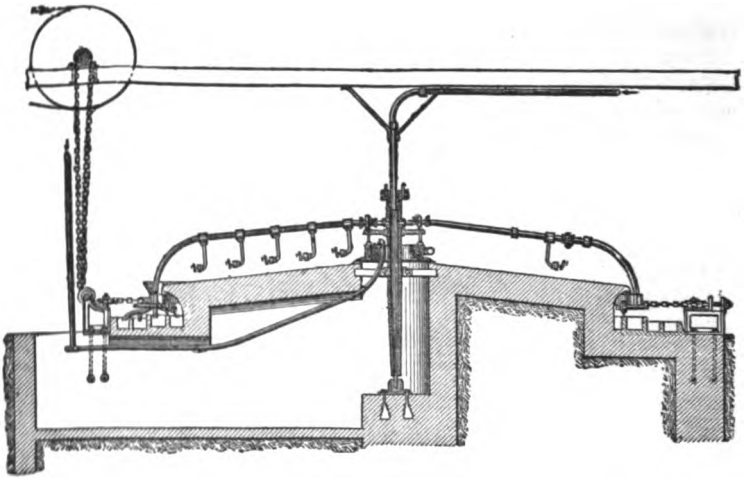

FIG. 400*a*.—VERTICAL SECTION OF LINKENBACH SLIME TABLE.

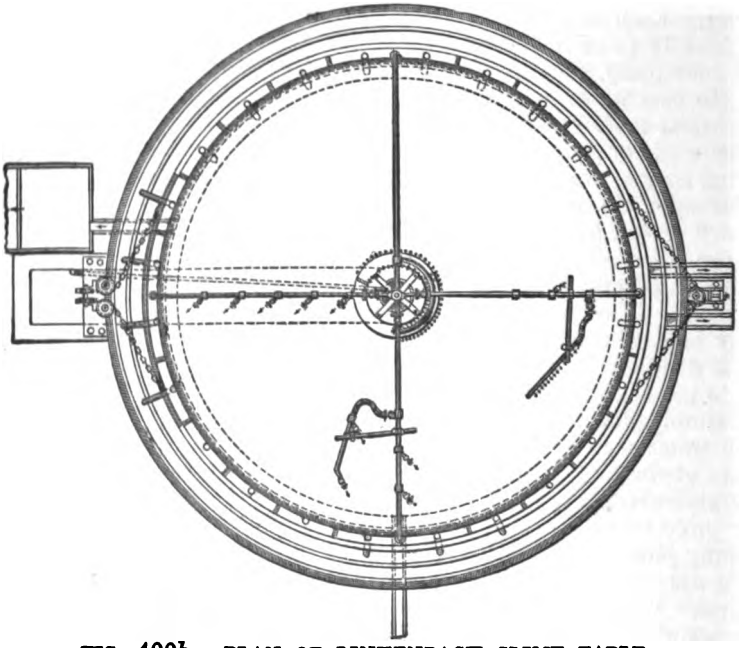

FIG. 400*b*.—PLAN OF LINKENBACH SLIME TABLE.

tained with a layer of pure Portland cement. A vaulted arch is constructed beneath on one side, for introducing the feed pulp and for oiling the step (see Figs. 400*a* and 400*b*). The table is surrounded with as many fixed circular launders as it is intended to make products. For example, three would make

heads, middlings and tailings; four would yield two kinds of heads, with middlings and tailings. The pulp, the feed water and the wash water distributors revolve, as do also the spray pipes for middlings and wash off pipes for heads, and also the catch hoppers for heads and middlings with the pipes for conveying them to their respective circular launders. The tailings run off the table directly into their launder. The revolving parts are either carried upon arms radiating from a central shaft above, or they are carried upon a circular carriage running upon a circular rail and driven by a chain. The second method is illustrated in Figs. 400*a* and 400*b*. In the former case the wash water is distributed from a revolving pan upon the shaft; in the latter case it is distributed from the shaft itself, which is hollow. In both cases the feed pulp comes in from below through the arch.

The table is made 6 to 8 meters (19 feet 8 inches to 26 feet 3 inches) in diameter, and the slope recommended is 1⅛ inches per foot for the coarsest slimes (that is, for grains up to 0.25 mm. diameter) and 1 inch per foot for the finest slimes. The moving parts revolve in from 2 to 4 minutes. The tables were at one time made in tiers of three decks, the upper deck 6 m., the middle 6.5 m. and the lower 7 m. in diameter. The machine seems to become complicated, however, by this arrangement, and to have lost the advantage of a solid foundation. This form has since been abandoned.

The Roberts table, patented in 1883, used in Mill 21, is a fixed convex, conical cement surface table, which works on the same principle as the Linkenbach table. It is 14 feet in diameter with 4° 30′ (0.94 inch to 1 foot) slope. The feed distributor is a revolving cast iron cone 3 feet in diameter and 5 inches high. This distributes the pulp over three-fourths of the circle. Below the cone and revolving with it is a 1¼-inch spiral spray pipe with ⅜-inch holes, 3 inches from center to center. The jets strike 10 inches away from the pipe and remove tailings and a middling product, leaving a bank of clean heads near the margin of the table. A radial wash-off pipe cleans off the heads, leaving the table ready for a new charge of pulp.

Bartsch gives to the surface of a non-rotating circular table an oscillating, bumping motion as follows[32]: A cam pushes the table a short distance circumferentially and at release a spring forces it back against a bumping post. The table has the revolving feed and wash-off appliances required by the fixed table design. This is a modification of Sparre's device, which shook the table back and forth by an eccentric.[6]

§ 499. Comparison of Vanners with Convex Slime Tables.—A vanner 4 feet wide, 12 feet long, costs $500 more or less; an 18-foot table costs $200 to $300 according to locality. Two-deck or three-deck tables cost somewhat less than twice or thrice that sum. Vanners treat pulp carrying from 12 to 38% (average perhaps 20%) of solid matter, the finer the product the less the quantity; tables treat pulp carrying 5 to 15% (perhaps average 10%) of solid matter, the finer the product the less the quantity. Four-foot vanners treat 4 to 6 tons per 24 hours; over 6 tons is probably an overload; 18-foot tables treat perhaps 6 to 15 tons per 24 hours, according to fineness. As to the percentage of sulphurets: in the gravity stamp mills, the author finds the feed to 4-foot vanners ranging from 1 to 5%, with an average of about 2½%, and the feed to 6-foot vanners ranging from 6 to 20%, with an average of about 11%. In rolls mills the 4-foot vanner will probably come nearer the second figure than the first. The tables receive pulp carrying perhaps ¼ to 3% of valuable mineral, averaging perhaps 1½%. The higher the percentage of concentrates the less is the capacity of any concentrator. We may say then, that judging from practice, slime tables are adapted for treating large quantities of thin pulp with a small percentage of concentrates; while vanners are adapted for treating smaller quantities of thicker pulp, which carry a higher percentage of concentrates.

The maximum size of the grains fed to tables is much finer than for vanners; and the former must receive classified products or they will fail, while the latter do good work on unclassified products. Vanners probably would do better work on classified than upon unclassified pulp, but in gravity stamp mills difficulties generally occur in adapting classifiers to the irregular working of the stamps, and this prevents their adoption.

In Mills 24, 31, 35, 36, 37 and 43 coarser classified products are sent to tables, and finer to vanners. This treatment should, in the opinion of the author, be reversed, for the table handles the very fine, more dilute slimes better than the vanner. In Mill 30 greatly improved results were obtained by changing from the practice of the above mills, and treating all the spigots of the box classifiers on tables, the table middlings going to vanners.

The power required for a vanner is perhaps ½ horse power; that for a table is very little, perhaps $\frac{1}{5}$ horse power.

§ 500. REVOLVING, CIRCULAR, CONCAVE SLIME TABLES have the form of a much flattened cone or funnel. Pulp is fed at the circumference over a portion of the surface, and wash water over the remaining portion. As the current of water flows toward the center it becomes narrower, and therefore, deepens and increases in speed, thus increasing its carrying power. Hence, a grain of heavy mineral that does not settle near the point of feed will move faster and faster as it approaches the discharge. The different products are washed down and separately collected near the center of the table. These tables are not much used, but are sometimes found as feeders to convex tables where the ore has a large amount of concentrates, as in Mills 27 and 28. In both of these mills the concave is the same diameter as the convex. In the figure shown by Linkenbach the concave is much narrower than the convex. In Mill 27 pulp is fed over one-third of the circumference, in Mill 28 one-fifth, in Linkenbach's figure one-sixteenth of the circumference. Wash water is fed over the remainder of the circumference. In Linkenbach's figure the upper (concave) table makes heads, middlings and tailings; the lower (convex) re-treats these tailings, and from them makes heads, middlings and tailings. In Mill 27 the upper (concave) makes heads to smelter and tailings fed to the middle (convex) table which yields heads to smelter, middlings to lower (convex) table and tailings waste. The lower table makes heads to smelter, middlings to vanner and tailings waste. In Mill 28 both the upper (concave) and lower (convex) make heads, middlings and tailings. The middlings of both go to the upper (concave) deck of No. 2 table. The lower (convex) deck of No. 2 has a separate feed. Both these tables make heads, middlings and tailings. The middlings go back to the upper deck of No. 2.

COMPARISON OF CONVEX AND CONCAVE SLIME TABLES.—Since a concave table receives its feed over such a large area, it can save considerable value from an ore carrying a high percentage of concentrates, but the tailings loss is necessarily high. A convex table, on the other hand, makes clean tailings. The lighting and inspection of a convex table are much more convenient than of a concave table, on account of the direction of slope.

§ 501. OPERATION OF CIRCULAR SLIME TABLES.—The most important considerations in the use of slime tables are the size of the grains to be treated and the speed of the water current. The former depends on the preliminary classification, and the latter upon the slope of the table and the quantity of water used. Other conditions, which are more or less dependent upon the above and all of which affect the process, are as follows:

The shape of the grains.

The specific gravities of the minerals to be separated.

The density of the pulp.
The rate of feeding the pulp.
The thickness of the water film.
The kind of surface.
The diameter of the table.
The speed of revolution.
The convex or concave construction.

Size of Grains.—The larger the grains, up to a diameter equal to the thickness of the film, the more rapidly they are carried forward by the current; but grains which project above the film are retarded, because the full weight of the unimmersed portion is added to the water weight of the immersed portion. Further increase reaches a size of grain that will not move at all. Linkenbach recommends 0.25 mm. as the maximum size of quartz; and the tests recorded in § 352 show that the coarsest pulp sent to tables (that is, the first spigot of the box classifiers) in Mills 22 and 38 contains only 5 or 10% coarser than that size. In Mill 30 there is about 5% coarser than 0.4 mm. and about 10% coarser than 0.3 mm. In Mill 28 there is about 5% coarser than 0.125 mm. and about 10% coarser than 0.1 mm. At the native copper mills of Lake Superior the tables are fed with pulp of which about 5% is too coarse to pass through a 100-mesh screen (approximately 0.125 mm.).

Preliminary Classification; and Specific Gravity.—The ideal feed would consist of grains of uniform shape (sphere or cubes) with a definite ratio between the diameters of the two minerals. The grains actually obtained from the classifiers, however, depart from this ideal, because larger flat grains settle with smaller roundish grains causing a considerable range in sizes; also on account of the presence of included grains of heavy and light minerals attached to each other in varying proportions; and finally, on account of the imperfections of the classifiers the feed to tables almost always contains a greater range of sizes than should be treated together. The tailings losses on the feed side of a table consist of the flat or flaky grains of heavy mineral, and of the finest slimes which come into the feed through the imperfections of the classifiers. This second loss may be very serious. The tailings loss on the wash-water side are due to the approach of the heads toward the edge of the table. They comprise the included grains and a few of the larger grains of heavy mineral. The middlings contain included grains mixed with a little of the smallest quartz and the largest grains of heavy mineral. This makes a product that can be well treated on a vanner, but is difficult to finish on a second slime table. If samples are taken from points all around a slime table they will generally be found to be poorest near the point where the tailings first reach the margin, and become richer all the way round until the middlings partition is reached. The middlings are richer still, and the heads of course approach pure heavy mineral, see § 903. If a sample is taken beyond the heads, where the first pulp water goes off, it will generally assay very high. This is from a little heads carried past the wash-off jets, but if the table is run properly the quantity should be so small as to be of little moment. It is, however, an important point to watch. The nearer the feed to a table comes to the ideal sorted product the more perfectly will it work.

The degree of sorting needed depends on the specific gravities of the minerals. The higher the specific gravity of the heavy mineral the greater will be the difference in size between the gangue and the heavy mineral in the pulp that comes from the classifier. Both the high specific gravity and the small size favor separation on the slime table, the former by the resistance offered to the water current, the latter because the particles do not project up into the rapidly moving layers of the water film. Hence, with such a heavy mineral as galena, less classification is required than with lighter minerals like blende and chalcopyrite; but

even with galena the very fine slimes will be lost if treated with the coarse portion. Practice in regard to preliminary classification in the mills may be summarized from Table 323 as follows:

In 11 mills the earlier spigots of surface current or whole current classifiers go to one table and the later spigots to another; in 1 mill the last spigot of a hydraulic classifier goes to a table; in 3 mills the overflow of hydraulic classifiers goes to tables; and in 10 mills the tables are all fed with like pulp consisting of the unwatered overflow of hydraulic classifiers.

Shape of Grains.—Roundish grains are considered to behave normally; and rolling rather than sliding is considered to be the normal motion. Longish grains swing around, side to the current, and on account of their less diameter may roll with a different speed from that of their associates. Flat grains may lie down and fail to move altogether or, if very thin, may, by being floated, move down more rapidly than the normal grains. Arborescent, flaky or leafy grains (for example, of native copper) move much faster than their size and specific gravity would indicate. The following experiment was tried: A batch of quartz grains, passing through a 10-mesh and resting on a 12-mesh sieve, was treated upon a plane rectangular table covered with No. 6 canvas with warp laid lengthwise, sloping 6°, with a water current of 12½ pounds per minute per foot of width. The grains that were washed off were nearly all roundish; those that remained were largely flat or with one flat plane. A second test was tried with quartz grains through 30-mesh on 40-mesh. The grains washed off were roundish; those remaining were flattish, though the difference was not quite as marked as in the former test.

§ 502. *Slope of the Table.*—Very fine pulp requires steep slope, with but little water and therefore a very thin film; while coarse pulp requires a gentler slope, but with much water and therefore a comparatively thick film (see § 509). This is based upon the fact that the work of the table is to size products consisting of sorted grains. If, however, the table served only to unwater the pulp, then the finer the grains the less should the slope be. With three exceptions, the mills do not appear to follow any particular rule as to slope and size of grain. Mill 35 conforms to the principle that fine pulp should be treated on a steeper slope than coarse; but Mills 28 and 37 follow the opposite practice. In Mill 37 the two upper decks slope 1⅛ inches per foot, while the lowest deck, which treats the middlings of the two upper decks, slopes 1¼ inches per foot. This middling product, of course, does not contain as large grains as the original feed.

Table 323 indicates that the slope of convex slime tables in the United States varies from ¾ to 1½ inches per foot, 1 to 1¼ inches (4° 45′ to 6°) being most common. The three concave tables on the list slope respectively 1.33 inches, 1.58 inches and 1.74 inches per foot. Kunhardt gives 1 to 2 inches as European practice. Linkenbach gives the following figures:

	Stationary Convex Tables.	Revolving Convex Tables.
Coarsest slime.....	1.33 inches per foot (6° 20′)	1.20 inches per foot (5° 45′)
Medium slime.....	1.20 " " " (5° 45′)	1.09 " " " (5° 10′)
Finest slime.....	1.00 " " " (4° 45′)	1.00 " " " (4° 45′)

Quantity of Water.—The greater the quantity of water the greater will be the speed of the current and the less its settling power. In the case of a circular convex table the water should be estimated with respect to the quantity which comes off from a foot of the circumference in a minute, since the most difficult part of the work of separation is done near the circumference. The only positive figures the author has are from Mill 44, where he found the thinnest film

noticed on any table was discharging 3 pounds and the greatest rush of water seen on any table was discharging 7 pounds of water per minute from 1 foot of circumference. The former figure is less and the latter more than the usual practice. If we consider 5 pounds to be about a proper quantity, and that an 18-foot table is discharging this quantity all around its circumference, then the total amount of water will be 48,842 gallons in 24 hours (33.92 gallons a minute). Approximately half of this will come in the feed pulp. The other half will be used on the washing side; and of this amount perhaps two-thirds will be used for washing and one-third for the wash-off jets.

The thickness of the film on a slime table is much less than that of the pulp bed on a vanner, because the slope is steeper, and because the pulp is thinner. Thin pulp is necessary in order to have the ore only one grain deep on the table and thus get approximately individual treatment of the grains. The following measurements of films on some of the mill tables were made with a special gauge (see § 884). Each measure was taken near the circumference of the table except where otherwise indicated.

Mill No.	Location on Table.	No. of Observations Averaged.	Thickness. Crest of Wave.	Thickness. Trough of Wave.	Diameter of Table.	Slope of Table.
			Inches.	Inches.	Ft. In.	
20..	6 inches from edge	1	0.061	0.061	18 0	5° 57′
	3 feet from edge	2	0.068	0.064		
43..	At point of pulp feed	2	0.065	0.069	18 0	4° 47′
	Average of several points near the curved wash water pipe	8	0.059	0.065		
44..	Feed side (a)	1	0.139	.....	17 8	7° 25′
	Wash water side	2	0.080	0.046		
48..	Feed side	1	0.119	0.049	19 0	5° 57′
	Wash water side	1	0.077	0.058		
	Average	.....	0.086	0.040	.....	.....

(a) On the feed side of this table a wave traveled down (about 8 feet) in 3 seconds; on the washing side in 4 seconds.

Density of Pulp.—The author has no exact data upon this subject. If we assume for an 18-foot circular convex table that about 5 pounds of water per minute leave the edge on every foot of circumference, that the table is fed with pulp upon about one-half of its circumference, and that it treats 12 tons in 24 hours, then the pulp will contain 10½% of solids. Linkenbach recommends 8 to 10%, but says that in practice tables are commonly fed with thicker pulp than this, which increases the capacity but also increases the losses in the tailings. In 1880 Munroe[14] found 3¾ cubic feet of slime, carrying 7 to 12 pounds of ore per cubic foot, fed to a single table per minute, which makes the solids about 10% and 16% respectively.

§ 503. *Kind of Surface.*—Four kinds of surface have been used: soft wood, cement, rubber and canvas. The effect of the surface upon the concentration varies with the roughness. The smoother a surface the less the particles are inclined to roll, and the less will be the retardation of the under current (due to friction). If a plate glass surface was used there would be a minimum drag upon the under current and the particles might slide down the surface without rolling at all. Both of these qualities are bad, and probably whatever advantage was gained by the trueness of the glass surface would be more than lost by these disadvantages. Wood has a slight roughness which inclines the grain to roll, and diminishes the speed of the under current. A cement surface does the same to a greater extent and needs a steeper slope in consequence. Rubber probably diminishes the under current. Canvas gives the greatest drag on the under current of any of the materials used. Moreover, the meshes of the cloth furnish little pits or riffles into which the particles settle. Quartz particles that have

been stopped by these riffles in the early stage of the operation are crowded out by the heavy mineral that follows. The author knows of but one mill in this country (Mill 30) where it has been tried, and there the table had the comparatively gentle slope of 1¼ inches per foot and a speed of one revolution in 74 seconds, with a diameter of 18 feet. The author has only begun upon experiments in this line, but thinks the extraordinary advantages of a canvas surface can be gained if the right conditions of slope and speed of revolution are determined. For example, his experiments indicate that with a steep slope (1½ to 2 inches per foot) and a speed of one revolution in 5 or even 10 minutes, a canvas surface will prove advantageous. It is used in some mills in the Harz Mountains with good results.[84]

Of the 25 mills shown in Table 323, at least 17 use wooden surface tables. Mill 38 tried a covering of thin sheet rubber, which was not successful because it wrinkled in warm weather. Thick rubber, however, gave good results. In Mills 15, 21 and 86 cement surfaces are used. In some of the tables the wooden surface is kept true and clean by special devices. In Mill 48 the Evans tables have the Evans radial wooden scrapers. In Mills 15, 45 and 46, Evans tables are used and presumably have the Evans scraper. Mills 38, 42 and 43 have wooden scrapers essentially of the form designed by Evans, but with rubber tacked on the lower edges. They are placed radially and just behind the jets for washing off the heads. These scrapers not only keep the table cleaned from the formation of mineral or vegetable slime, but they also grind off the surface slightly, helping to keep it true. They are held between guides and bear their whole weight upon the table. In Mill 38 the weight of the scraper is partly relieved by suspending cords. In Mill 15 the cement surface is trued every nine months by being ground with fine sand and a board straight edge, and is then varnished; in this way the true cone is maintained for years.

Speed of Revolution.—The speed of revolution controls the amount of washing that is done. A table which revolves once in two minutes washes the ore twice as long as one which revolves in one minute. The revolution may range from such a rapid speed that centrifugal force interferes with the treatment, down to an indefinitely slow speed. In general it is affected by the following considerations: thicker pulp requires faster speed than thinner to avoid too heavy an accumulation upon the surface; larger grains require faster speed than smaller, and steeper slope requires faster speed than gentler, other things being equal, because the particles are in both cases carried to the circumference more rapidly. The shorter the run down the slope, other things being equal, the quicker should be the revolution of the table, because the material reaches the circumference in shorter time. The faster the speed of revolution that is practicable in any case, the greater the capacity.

Table 323 gives the practice in the mills; and from that table it appears that slime tables in the United States make one revolution in from 41 to 155 seconds, with an average of 85. The 41 seconds record is much less than the others and it is on a very small table. Kunhardt speaks of tables in Europe revolving once in 30 seconds and once in 24 seconds respectively, as instances of the greatest speed, and of others revolving once in 3 to 4½ minutes (180 to 270 seconds) as instances of the slowest. The latter were working upon very dilute pulp.

Diameter.—Table 323 shows revolving convex tables ranging from 10 to 19 feet in diameter, the usual size being from 16 to 18 feet, most frequently 18 feet. Since the thickness of the water film diminishes as it approaches the margin of the table, and since this method of concentration requires that the film shall not have more than a certain maximum thickness nor less than a certain minimum, it follows that convex tables can treat pulp only for a limited radial distance without having the film too thick at the start or too thin at the

end. The real work of separation is done on the three or four feet of radius next to the circumference.

Table 324 gives the radii of tables used in the mills, and the net working radial length. The last column shows that with a small distributing cone the thickness of the film at the beginning of treatment is much greater than at the margin of the table, while with a wide distributing cone it is but little thicker. The author considers this fact an argument against large tables, but it does not condemn large distributing cones. The larger the diameter the greater will be the capacity of a table; but the greater also will be the central area on which no concentration can take place, and consequently, the greater the waste of floor and roof space. The advisable limit of diameter seems to be about 18 feet. To make the most use of floor and roof space tables are built two and even three decks high.

TABLE 324.—WORKING RADIUS OF SLIME TABLES.

Mill or Authority.	Radius of Feed Cone.		Radius of Table.		Working Radial Length.		Depth of Film at Circumference of Feed Cone Divided by Depth at Circumference of Table.
	Ft.	In.	Ft.	In.	Ft.	In.	
21	1	6	7	0	5	6	4.7
28	1	6	9	0	7	6	6.0
31	1	9	9	0	7	3	5.1
32	1	6	9	0	7	6	6.0
33	1	3	9	0	7	9	7.2
35	1	6	9	0	7	6	6.0
37	1	3	8	0	6	9	6.4
38	1	2	8	6	7	4	7.3
	2	6	8	6	6	0	3.4
42	1	3	9	0	7	9	7.2
43	1	3	9	0	7	9	7.2
44	1	6	8	10	7	4	5.9
45	3	8 (a)	9	8	6	0	2.6
47	3	10	8	10½	5	½	2.3
48	3	8 (a)	9	6	5	10	2.6
50	1	6	8	0	6	6	5.3
Linkenbach fixed table	2	0	11	6	9	6	5.7

(a) Evans table—radius of dead head on feed side.

The capacity of a conical slime table depends on the various considerations that have just been discussed. The pulp should not be fed so fast as to interfere with individual treatment of the grains. In 1880 Munroe[14] found 18-foot tables at the Osceola mill, Lake Superior, treating 18 to 20 tons of slime (dry weight) in 24 hours; and at the Atlantic mill he found tables treating 30 tons working on slime and 28 to 32 tons on sand. In 1884 Coggin[17] found that 20-foot tables at Lake Superior were treating 12 to 13 tons of slime in 24 hours. In Harz Mountain practice, 24 to 36 tons are treated in 24 hours on tables from 16½ to 29½ feet in diameter, sloping from 1 in 10 to 1 in 12 and making 1 revolution in 3 to 4 minutes.[24] Linkenbach gives the following figures as the capacity of his fixed convex slime table.[9]

Feed.	Diameter of Table.	Capacity. Tons per 24 Hours.
Coarse slimes	6 m. (19 feet 8 inches.)	19.04
Medium slimes	6.5 m. (21 feet 4 inches.)	17.45
Fine slimes	7 to 8 m. (23 feet to 26 feet 3 inches.)	15.87

The author believes that 12 to 15 tons in 24 hours, depending on the size of grains, is a suitable quantity of feed to 18-foot slime tables.

§ 504. THE BELT FILM-TABLES.—These machines have wide belts stretched between end rollers and supported upon numerous intermediate small rollers or

upon a plane surface. One design gives the belt an up hill travel like that of a vanner, but without any shaking motion. This yields only two products, heads at the upper end and tailings at the lower. Another design has the belt horizontal in its length but sloping from one side to the other, like the Stein machine, but without a jerk. On this form the pulp is fed upon the rear upper corner of the traveling belt and spreads its products out like a fan, according to their power to move down the slope. Since the belt is fed with a sorted product, the upper band of the fan will have the highest gravity ore; the next band will have the next lower, and so on, down to the lightest tailings. These tables can yield heads, middlings and tailings, or they can make a three or four mineral separation. They differ from the slime tables in that they have an adjustable slope which adds one more variable for adapting the treatment to the ore. The slope may be diminished and the water increased, or *vice versa*. The slime tables, on the other hand, have a constant slope, and the quantity of water is the only possible adjustment. In regard to the thickness of the water-film, it remains constant on these tables from the feed edge to the discharge edge; whereas it diminishes on the convex tables and increases on the concave tables.

The Brunton table was invented in 1840,[86] and appears to have been the first traveling belt machine of any kind. The canvas belt, which was covered with either paint or rubber, traveled up hill at an angle that could be varied by means of jack screws at the lower end of the frame. On the under side of the belt were attached cross cleats, which bore upon longitudinal cleats fixed to the frame between the two end rollers. The belt travel was received through the head roller. Pulp was fed at about one-fourth of the distance from the head to the tail, and wash water very near the head. The tailings were washed down the belt and off at the lower end. After passing over the head roller the belt dipped, by its own weight, into a tank of water, where the concentrates were deposited. In returning from this tank to the tail roller, the belt passed up over another roller carried on the under side of the frame.

A canvas belt slime table is used in Mill 86 which is probably of this class. It has the advantage of the rough canvas surface (§ 503) together with continuous operation.

The Uren table was used on native copper slimes at Lake Superior in the sixties. The rubber belt was 16 feet long by 3¾ feet wide, and horizontal lengthwise, with an adjustable slope from side to side, and moved on a plane surface between the end rollers. It was fed with pulp at the upper rear corner and with wash water along the upper margin.

The Ferraris table[41] has a plane rubber belt 0.7 m. (28 inches) wide, 4 m. (13 feet) between centers of end rollers. The latter are furnished with wide flanges to keep the belt in line. The belt slopes from one side to the other, is supported upon four small rollers, and travels 6 m. (19.7 feet) per minute, being driven by a variable speed friction pulley on the head-roller shaft. It is fed with a sorted product at the upper rear corner. Wash water is applied by five jets, which are nearly horizontal, and are directed across the belt. The jets are spaced evenly along the belt, and each jet strikes the belt a little lower than its predecessor. The water flowing off the margin from each jet, is caught in a separate hopper, and in this way the five jets give five products graded in richness. At Monteponi, Sardinia, in working an ore that carries galena, cerrusite and calamine, the pulp fed to the table is thoroughly classified, and one table treats 40 liters of pulp per minute, amounting to about 3 tons of dry ore in 11 hours, using 60 liters (about 16 gallons) of wash water per minute. The table does quite as good work without any shaking motion as with it. The belt can be made long enough for two or even three successive treatments upon it.

The Castelnau table[85] has a rubber belt traveling horizontally, sloping from

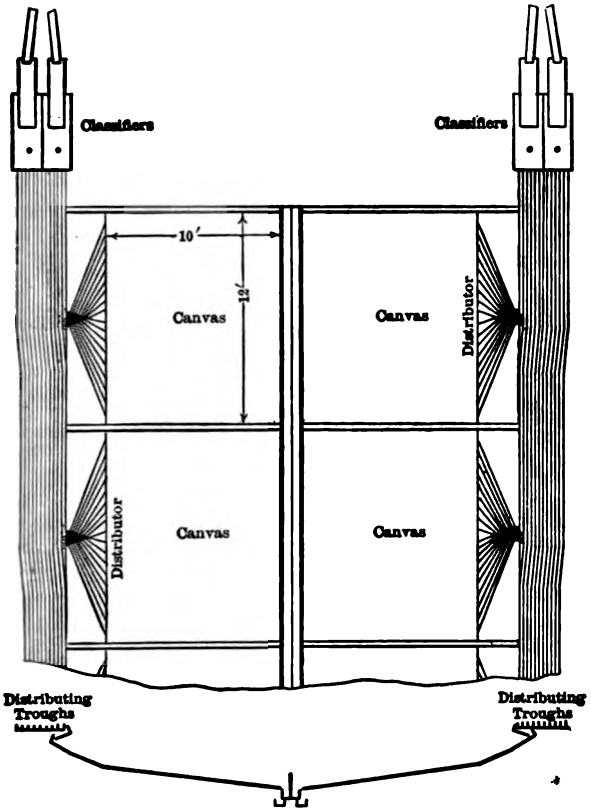

FIG. 401*a*.—CANVAS PLANT AT MILL 78.

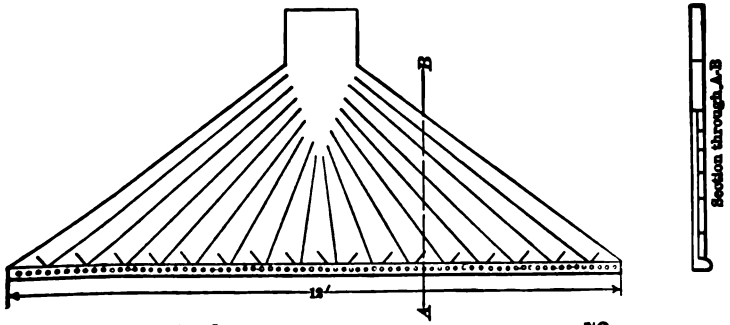

FIG. 401*b*.—PULP DISTRIBUTOR AT MILL 78.

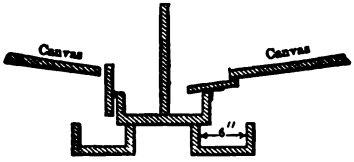

FIG. 402.—TAILINGS AND CONCENTRATES LAUNDERS AT MILL 78.

one side down to the other. The length of the belt is 7.46 meters (24 feet 6 inches) between centers of end rollers, and the width 1.47 meters (4 feet 10 inches). The end rollers are 0.6 m. (2 feet) in diameter. The inclination is 13⅓° more or less. The upper part is carried by 26 little rollers about 0.11 m. (4.3 inches) in diameter, the lower by 5 rollers. The belt has a speed of about 40 feet a minute. The belt is guided by longitudinal ribs which fit into grooves in the end rollers. The machine is fed at the rear upper corner and treats 1 ton per hour. At Villefort, Lozere, France, treating quartz-galena ore, slimes with 6% lead yield concentrates with about 52% lead.

Ib. INTERMITTENT SURFACE TABLES.

The intermittent surface tables include the canvas, blanket and carpet tables; the German sweeping tables; and the Cornish frames. They do not have the circular form or the revolving parts which permit automatic operation. They can be charged automatically, but the change to clear water washing and to the final sweeping or hosing off of the concentrates must be done by hand at stated intervals.

§ 505. CANVAS TABLES are inclined rectangular tables covered with canvas (cotton duck). The pulp, to which clear water is added if necessary, is evenly distributed across the upper margin. As it flows down, the sizing action of the film operates more effectively than with the smooth table, as explained in § 503. When the meshes have become pretty well filled with concentrates the flow of pulp is stopped, the remaining quartz washed off with clear water, and finally the concentrates either hosed or broomed off. As the warp always projects higher than the woof, a piece of duck will offer more resistance by placing the warp across the table than down the table; on the other hand, a coarser duck laid lengthwise may have the same effect as a finer duck laid crosswise. The great length of the tables, combined with the limited width usually adopted, makes it generally advisable to lay the duck lengthwise.

The author found three methods of applying these tables to the re-treatment of vanner tailings in California: Mills 75 and 78 treat the fine overflow of hydraulic classifiers on canvas tables; Mill 79 feeds to canvas tables the overflow of riffle boxes, which in turn are fed with classified vanner tailings; Mill 80 formerly sent vanner tailings directly to canvas tables, but now uses the same plan as Mill 78. In Colorado the author visited a mill which was sending the whole of the stamp pulp to canvas tables. In Mill 78 each canvas table (see Fig. 401*a*) is 12 feet wide, 10 feet long and slopes 1½ inches per foot (7° 5′). (The wood surface on which the canvas is laid is 12 feet square, but the upper 2 feet are covered by the distributor.) The canvas is No. 6 duck woven all in one piece with the warp laid crosswise. It lasts 8 months before requiring any patching; and is then discarded and replaced by new. The canvas is slipped up a little every four or six weeks to relieve it from the wear due to the joints of the board table beneath.

The feed pulp is divided at the overflow of the four classifiers, each overflow being divided into six equal parts and sent to six different tables. Each table has a distributor such as shown in Fig. 401*b*. At the foot of the diverging guides there is a little dam perforated with holes 2 inches apart, for the final distribution of the pulp. The tables are arranged in two rows of twelve tables each. Each row has its own tailings launder, while a central heads launder serves for both (see Fig. 402). The central launder, however, has a dividing partition in it to serve as a splash board, and to allow the concentrates from one side to be kept separate from those of the other in case of need. The attendant goes the rounds of the tables once an hour. He switches the feed from two of

the tables to two extra tables, turns on clear water to remove some of the remaining quartz, then swings the tail boards into line and hoses off the concentrates into the concentrates launder, using a wide, flat, broom-shaped jet, which is much more effective than a corn broom. The latter also wears the canvas much faster. When these two tables have been cleaned, the tail boards are again tilted up, the pulp shunted back and they go to work for another hour. He then treats the next two tables in the same way. The two extra tables are like the others, and these make a total of twenty-six tables to be cleaned every hour. The twenty-six tables are fed with 30 tons of pulp (dry weight) in 24 hours, assaying about $2.25 gold per ton, and yield about two tons of concentrates, assaying $30 per ton. This product is enriched on a little end-shake vanner to 1,000 pounds, assaying $100 per ton. The plant requires two men during the day and one at night, the vanner not being run at night. Sizing tests which give an idea of the stuff treated by these canvas tables are given in Table 320.

Mill 75 employs forty of these fine tables, but uses less slope (1¼ inches instead of 1½ inches per foot) on account of the slippery quality of the talcose ore, which hinders the canvas from holding the pyrite on the steeper slope. Mill 55 has recently added one of these plants.

In Mill 79, after Mill 72, the overflow from the riffle boxes treating the coarser portion of the vanner tailings is conducted to a rough form of classifier (see § 338) which delivers the pulp through 1-inch holes to 16 canvas tables. The latter are each 39½ feet long, 20 inches wide, slope 0.7 inch in 1 foot (3° 20′), and are separated by partitions 2 inches wide. They are covered with No. 4 Woodbury cotton duck, with warp laid lengthwise. They are washed off once an hour. After the pulp is shut off, clear water is turned on to wash off the quartz, and the heads are then washed off with a hose. While the clear water is removing the quartz from one table, the concentrates are being hosed off from the next. A canvas extension bridges the concentrates over the tailings launder to the heads launder. The use of a broom halves the life of the canvas. The overflow of the riffle boxes treating the finer portion of the vanner tailings goes to two rough classifiers, each for a bank of twenty-three tables, forty-six tables in all. These tables are 16½ feet long, 20 inches wide, and slope ¾ inch in 1 foot (3° 35′). They also are washed off once an hour, and this is done by running clear water over the table and washing down the concentrates with clear water, aided by a broom.

The sixty-two tables treat about 119 tons of riffle box tailings in 24 hours. The concentrates are caught in the second compartment of a settling tank. The settlings in the first compartment, consisting of the riffle box concentrates, are sent direct to chlorination works; those in the other compartments are enriched by a Woodbury end-shake vanner, and they yield in 24 hours 666 pounds assaying $100 per ton. This plant requires two men on each shift.

Mill 80 had two banks of tables sloping toward each other. Each bank contained 45 tables and each table was 42 feet long, 20 inches wide, net, with a board strip 2 inches wide and 1 inch high between them. They sloped 1⅛ inches per foot (5° 20′) and were covered with No. 8 cotton duck. This was protected from the wear of the feed stream at the upper end, by a board 5 inches wide. The main launder, 14 inches wide and 11 inches deep, sloping 0.19 inch per foot (0° 55′), divided into three parts. Each of these again divided into two parts. One of each two parts, or a total of three out of the six parts, went to the near end of the mill; the remaining three parts bridged over to the far end. The remainder of the distribution for the near end was conducted as follows: Each of the three parts divided into five, and each of these discharged into a distributing box 64 inches long, 14½ inches wide at top, 8 inches wide at bottom, 12 inches deep, feeding three tables, each through one hole. The distribution

for the far end was similar. At the foot of the tables, three launders ran across the mill, a tailings launder for each bank of 45 tables, and between them a single heads launder, or heads tank as it was also called. When cleaning off the tables, the concentrates were bridged across the tailings launders by wooden chutes. The tables are washed off once in two hours. The attendant has the pulp shut off two tables at one time; clear water is flowing over one of them to remove the quartz, while the other is being swept down with a corn broom aided by clear water. At the end of about 5 months the canvas is so much worn that it ceases to catch well, and is therefore turned over. At the end of another five or six months it is discarded, dried and burned, the ashes being worked for gold.

The 90 tables treat 410 tons of vanner tailings (or 4 tons, 1,100 pounds each) in 24 hours, assaying 60 cents per ton; yielding 3,000 pounds of concentrates in No. 1 settling tank, worth $45 per ton, and 238 pounds in No. 2 settling tank, worth $60 a ton, with about 408 tons of tailings assaying 40 cents a ton. At the time of the author's visit, it was thought that the plant was overworked and that 120 tables would be the proper number to do the work. Since then a plant like Mill 78 has been substituted.

Rittinger's duck tables (*Goldrinnen*) are 9 feet long, 15 inches wide, sloping 1 inch to 1 inches per foot, the heavier the mineral the more the slope. They are cleaned after one or two hours' work, the canvas being taken up, rinsed in a tub and replaced. The capacity of each table is 0.5 to 0.7 cubic foot of pulp per minute. One boy tends ten to fifteen tables.

The following figures show some measurements of water films on canvas tables in Mills 78 and 80.

MILL 78.[50]

	Seconds for Wave to Travel 10 Feet.	Thickness of Film.				Length of Table.	Slope of Table.
		1 Foot from Head.		1 Foot from Tail.			
		Crest.	Trough.	Crest.	Trough.		
		Inches.	Inches.	Inches.	Inches.	Feet.	
Table 5	7.8 to 8.2	0.067	0.050	0.069	0.040	10	7° 5′
Table 5	6.5	0.068	0.050	0.070	0.045	10	7° 5′
Table 6	6.5	0.065	0.050	0.075	0.045	10	7° 5′
Table 6	6.5	0.065	0.050	0.078	0.045	10	7° 5′

NOTE.—At the head the wave was 5 inches long from crest to crest; at the tail it was 12 inches. The first set of figures from each table were taken just after turning on the feed pulp; the second set just before turning off the pulp.

MILL 80.

	5 Inches from Head.		3 Inches from Tail.		Length of Table.	Slope of Table.
	Crest.	Trough.	Crest.	Trough.		
	Inches.	Inches.	Inches.	Inches.	Feet.	
Table A	0.10	0.09	0.11	0.10	42	5° 20′
Table B	0.14	0.13	0.16	0.13	42	5° 20′

NOTE.—Table A was considered to have too little water upon it; table B was working well. On table B a wave took 17 seconds to go the length of the table; a splinter of wood took 19 seconds.

COCOA MATTING has recently come into considerable prominence in connection with the recovery of gold from modern river and other placer deposits. The gravel is first screened, usually in a trommel running on rollers and provided with an internal spray pipe. The screen sends the coarsest gravel to waste, and generally, separates the remainder into two or more sizes which then pass over long rectangular tables upon which the matting is laid. The coarsest gravel delivered to the tables varies from a maximum of 1½ inches to ½ inch diameter or less. In order to catch any gold that may sift through the matting, cotton or linen cloth is laid under it. The matting is held in place by side cleats which

are fastened with wedges. To aid in catching the gold, expanded metal riffles (see § 510) are commonly laid on the matting. In some cases wire netting is used instead of expanded metal. As an example of the tables that are used, we may quote the Earnschleugh No. 2 dredge, which is at work on the Molyneux River in Otago, New Zealand. These tables are each 3 feet wide and 13 feet long. The matting is put on in 4-foot lengths for convenience in cleaning up. The method in general use for cleaning consists in taking up the mats and cotton, and rinsing them in a tank of water. When sufficient washings have accumulated, they are carefully re-treated on a table 12 feet long by 20 inches wide, covered with plush, baize, blanket or matting, and the gold that is finally rinsed from these is collected by panning, either with or without mercury. This subject will be considered more in detail under Mills 51 and 52 in Chapter XX.

§ 506. CARPET TABLES.—Mills 62 and 76 use carpet tables, following the amalgamated plates and preceding the vanners. Mill 62 uses Brussels carpet 3 feet long, 56 inches wide, sloping 2¼ inches per foot, divided down the center. The amalgamated plates are dressed every four hours and the carpets are removed and cleaned at the same intervals. The carpet is cleaned by rinsing it in a tank of water to remove the rusty gold, rich pyrite, included grains and foul amalgam adhering to it. In Mill 76 Brussels carpet is used, 16 feet long, 56 inches wide, sloping about 2 inches in 1 foot and divided down the center.

TABLE 325.—CANVAS, BLANKET AND CARPET TABLES.

Abbreviations.—Ft.=Feet; In.=Inches; No.=Number.

Mill No.	Kind of Table.	Length Ft. In.	Width. Ft. In.	Slope. Inches per Foot.	Slope. Degrees	Surface. Quality.	Surface. Life.	Feed.	Destination of Concentrates.	Destination of Tailings.	Tons Treated per Table in 24 Hours.
62	Carpet.	3-0	(v) 4-8	2¼	10° 35′	Brussels carpet....	.....	(a)	(i)	(r)	10-15
75	Canvas	10-0	12-0	1½	5° 55′	.....	.....	(b)	.....	.....	.....
76	Carpet.	16-0	(v) 4-8	(h) 2	h 9° 30′	Brussels carpet....	.....	(a)	(i)	(r)	7.5-12.5
77	Blanket	3-6	1-8	2	9° 30′	Wool blanket.....	12 months..	(a)	(k)	(r)	5¾
78	Canvas	10-0	12-0	1¼	7° 5′	No. 6 Cotton duck..	8 months..	(b)	(m)	(s)	1.35
	"	10-0	12-0	1⅛	5° 20′	"	"	(c)	(m)	(s)	.....
	"	10-0	12-0	.....	.....	"	"	(d)	(m)	(s)	.....
79	"	39-6	1-8	⅞	3° 20′	No. 4 Cotton duck..	.....	(e)	(m)	s	1.9
	"	16-6	1-8	¾	3° 35′	"	.....	(f)	(m)	(s)	
80	"	42-0	1-8	1½	5° 20′	No. 8 Cotton duck.	10 months..	(g)	(o)	(t)	4.55
86	"	.....	.....	.....	.....	.....	.....	(b)	(o)	(s)	.....

(a) Stamp pulp from amalgamated plates. (b) Overflow of hydraulic classifier. (c) Overflow of box classifier. (d) Tailings of special vanner. (e) Coarse riffle-box tailings. (f) Fine riffle-box tailings. (g) Vanner tailings. (h) Approximately. (i) Clean up barrel. (k) Smelter. (m) Special vanner. (o) Cyanide leaching. (r) Vanners. (s) Waste. (t) Arrastra. (v) Partitioned down the center.

BLANKET TABLES.—In Mill 77, woolen blankets are used, 42 inches long, 20 inches wide laid on a slope of 2 inches in one foot. They are fed by pulp from amalgamated plate and trap. The blankets are cleaned by rinsing every two to four hours, according to the richness of the ore. The rinsings are sacked and shipped to smelter; the tailings go to concentrators. The blankets cost $1 each and last 12 months.

THE GERMAN SWEEPING TABLE, as described by Rittinger,[11] has a plane wooden surface 12½ feet long, 4 feet wide, with slope to suit the work, as follows:

	Slope.	Cubic Feet Pulp per Minute.	Pounds Sand in a Cubic Foot of Feed.	Diluting Wash Water. Cubic Foot per Minute.
Coarsest slime.....	10° to 12°	0.3 to 0.5	15 to 25	0.6
Finest slime.....	5° to 6°	0.08 to 0.12	5 to 8	0.15

It is fed for four minutes with pulp distributed across the upper end; the feed pulp is turned off and the wash water continues for two minutes; then the concentrates are swept off with a broom. During the charging and washing periods, any banks that may form, which tend too much to hold back the lighter minerals,

are distributed by a broom; and any gutters, which tend too much to carry forward the heavy mineral, are checked by sweeping against them. During the four minutes of charging, the tailings drop into the tailings launder; during the two minutes of rinsing, a short bridge conveys the middlings to their launder, and during the brooming off, a long bridge conveys the heads to their launder. The use of a table calling for so much labor as this, is confined to separating the minerals in an already concentrated product; for example, the separation of galena from pyrite or blende.

CORNISH "FRAMES" are used for washing fine slimes in the Cornish tin works. They are plane, rectangular wooden surfaces, and are built tandem, so that the tailings of the first table are re-treated on the second. After the pulp has flowed over the tables for a few minutes, the tail boards are turned up so that each table will discharge into a special concentrates launder; and clean water is applied at the same time, to wash down the accumulated concentrates. The lever that tilts the tail boards is connected, by a rod, to the lever that turns on the water, so that the two operations are performed together. When the concentrates have been washed down, the tail boards are returned to their original positions and the operations repeated. The changes are made either by hand, or automatically as follows: A small, triangular box, into which water slowly runs, is so placed at the head of each table that when full it overbalances and quickly discharges its contents upon the table. These boxes are connected to the tail boards by a rod and levers, so that in turning over they turn the tail boards at the same time. The levers are so weighted that the tail boards and boxes return to their original position after the water is discharged from the latter.

II. BUILDING TABLES.

§ 507. Building tables, or buddles, are stationary washers for sand or slime, in which the ore gradually builds up until a bed 10 or 12 inches deep has accumulated.* The washing is then stopped and the products cleaned out. The building up of the sands is regulated by adjusting the tail board which prevents the ore rolling off the table. Buddles, like surface tables, must be fed with classified products, and when feeding begins the action is the same as on a surface table; but as the material builds up, the sizing takes place upon a bed of more or less moving sand instead of upon a solid surface. However, after the building begins, the action continues uniform, so that the finer grains (heavy mineral) are deposited near the feed, and the coarser grains (light mineral) at the tail. Buddles have a quality which the surface tables do not possess, namely, the finer particles nearer the head form a comparatively smooth surface on which the large grains easily roll, while the coarser grains nearer the tail furnish a rough surface. Each grain, therefore, has conditions of current and of surface suitable for stopping it at its proper place. The buddles are made convex conical, concave conical and rectangular.

THE ROUND CONVEX BUDDLE shown by Rittinger (Figs. 403*a* and 403*b*), has a feed cone with 3 feet radius, 18° slope, and with its outer edge 9 to 12 inches above the washing surface. The radius of the tail board of the buddle is 10 feet, giving a radial length of 7 feet for treatment. The tail board is 9 inches to 12 inches high. A launder is placed around the buddle to carry off the waste water. The bottom is laid upon sixteen rays of timber fastened to a central post, and upon these are nailed the bottom boards matched together as chords around the circle. The boards so laid are then planed to a true conical surface. A revolving conical feed hopper, fed by a fixed launder above, distributes the pulp to the feed cone,

* The term *buddle* is also used to designate a surface sizing table, but the author prefers to confine its use to the class here described.

and upon the surface of the latter are distributing blocks for evening the feed. Two revolving arms with little drums, with crank, ratchet and pawl, serve to regulate the height of the suspended sweeping bars. The latter are supplied with birch or corn brooms, or canvas sweeps. The central shaft stands upon the central post and is driven by beveled gears and pulleys. It revolves 10 to 12 times per minute. The brooms being properly set, the feed water is started, and the sand is shoveled into the feed box. The brooms level up the gutters and ridges, and compel even settling. The formation of the building cone is watched, and

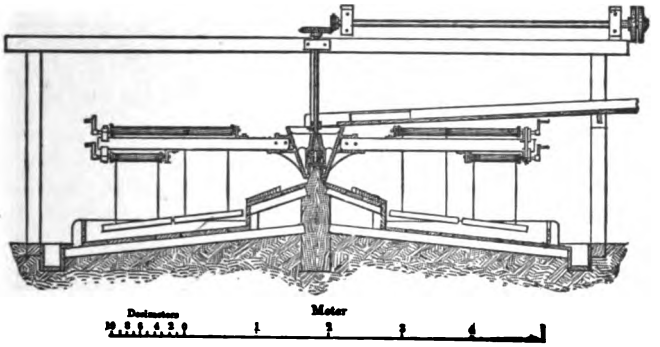

FIG. 403*a*.—VERTICAL SECTION OF A CONVEX BUDDLE.

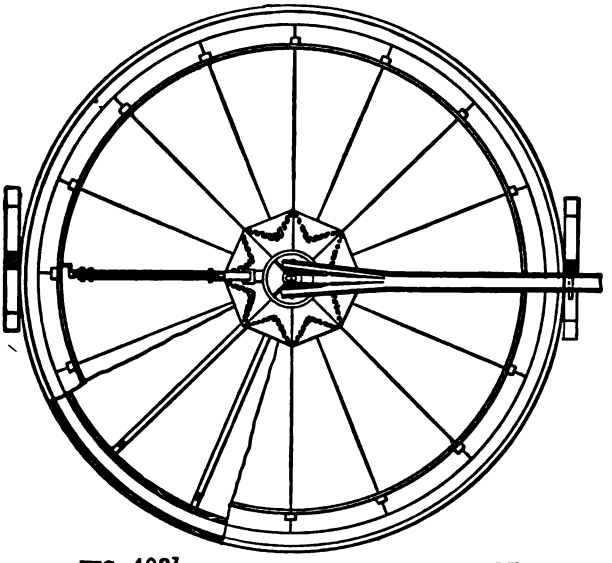

FIG. 403*b*.—PLAN OF A CONVEX BUDDLE.

if the sand builds too fast at the upper end it shows that the pulp is too thick, or that it is not fed in sufficient quantity. If the sand settles too thick below, it shows that the pulp is too thin or that it is fed in too great quantity. As the bed fills up, plugs are inserted in the perforated tail board. When charged, the overseer tests the quality, if necessary, and marks off the different products in circles. The attendant then shovels each concentric product into its pile or bin or, if waste, to the waste launder. Rittinger gives the capacity as 180 pounds of coarsest slime or 80 pounds of finest slime (dry weight) per minute.

Mill 11 has two convex buddles 11 feet outer and 3 feet inner radius, and 1 foot deep, with a central conical distributor. It has four horizontal sweeping arms. On each of two opposite arms are two strips of duck, 2 feet by 3 feet, for sweeping the head and tail of the slope; on the other two arms are single strips, of the same size, for sweeping the center of the slope. In front of the two arms with two sweeps are spray pipes for adding clear water. The arms revolve eight times per minute. The ore is shoveled into a box at the side, into which water flows. The pulp is conveyed by a launder to a central distributing cup and thence, by four spigots, to the 6-foot distributing cone. There are two of these buddles doing different work. No. 1 is fed with sludge which has passed through a 1-mm. round hole, 1¼ hours being required for charging. It makes waste and three grades of middlings. No. 2 treats middle products from No. 1 and also from a rectangular buddle. This No. 2 buddle makes four products:

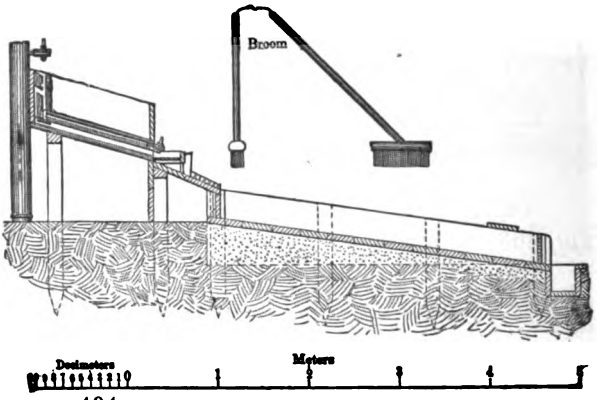

FIG. 404*a*.—VERTICAL SECTION OF RECTANGULAR BUDDLE.

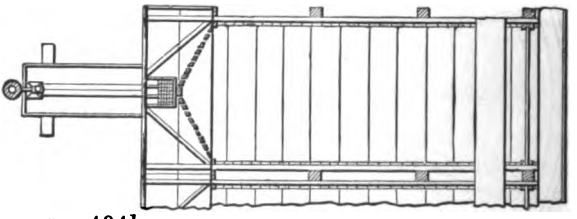

FIG. 404*b*.—PLAN OF RECTANGULAR BUDDLE.

(1) Lead ore accumulated and re-run for galena; (2) market blende; (3) middlings returned; (4) waste.

THE ROUND CONCAVE BUDDLE shown by Rittinger has the same dimensions and slopes of treatment surface as the convex. The inner radius is 3 feet, the outer is 10 feet, but it slopes toward the center. It has four sweeping arms with brooms of regulated height, and these arms are also launders which feed the pulp from the center distributing cone to the sloping feed apron around the circumference. The capacity and mode of regulating are about the same as for the convex buddle. The same comparison that was made in § 500 between convex and concave slime tables, holds here for the convex and concave buddles.

THE RECTANGULAR BUDDLE shown by Rittinger (Figs. 404*a* and 404*b*), is 5 feet wide and 12 feet long, with ends and sides 1 foot high.

The right quantity of water, found by experience, is turned on, and the sorted ore is shoveled into the feed trough, and flows on the table. A broom, shown in

the figure, is used to sweep it lightly from side to side, to prevent gutters forming in the finer deposit toward the head end. Such gutters would carry down the rich ore and derange the working. Plugs are put into the tail board from time to time to maintain the slope of the sand bank. When the buddle is full (9 to 10 inches deep) the water is shut off and the quality of the sands is tested with a vanning shovel and they are marked off into heads, middlings and tailings, or more products if desirable. The heads are sent to the kieve, if rich enough; if not, they are set aside to accumulate, and are re-treated on the buddle. The middlings are set aside to accumulate and are re-treated on the buddle. The tailings are waste. The capacity varies from 35 pounds of coarsest slime to 1.2 pounds of finest slime per minute.

A scheme of re-sorting the products which require re-treatment may be somewhat difficult to devise, and it is not on record as having been practiced, but it would add to the efficiency of the re-treatment, because these products are completely unsorted by the first buddling. A possible plan for accomplishing this result would be to feed the sand to a one spigot classifier, send the spigot product to an unwatering hopper, the spigot of which would give an even feed to a jig; and to send the overflow of the classifier as feed water to a buddle, to which the usual charge of sand was added in the feed box.

At Mill 11 a rectangular buddle is used upon zinc blende sludge. It is 5 feet wide, 8 feet long, 1 foot deep. The sweeping is done with a broom having cotton duck upon it in place of bristles. It treats the poorest middlings from the round convex buddle, making tailings waste, middlings re-treated, and heads to a round buddle.

A tye is a long, narrow buddle which is fed by shovel. It somewhat resembles the "run" (§ 338), but owing to the difference in the thickness of the water film in the two cases the former acts more by the sizing action of the film while the latter acts more by the principle of free settling particles. In Mill 47 a tye is used for treating the last hutch of the finishing jigs, and also, separately, for the concentrates of the slime tables. It serves here simply to separate the coarser from the finer portions, the former being found at the lower end, the latter at the upper end of the tye. This is done in preparation for the kieve.

EXPERIMENTS ON SIZE OF GRAINS, SLOPE OF TABLE, AND WATER QUANTITY FOR FILM SIZING.

§ 508. In order to contribute facts upon the best conditions of feed, of water and of slope, the author prepared a series of closely sorted quartz and galena products in the tubular classifier described in § 357. The following list gives the diameters of the grains of both quartz and galena in the several sand sorts together with currents of water used in preparing them:

Average Diameters of Grains.				Currents in which Particles	
Mm.		Inches.		Fall.	Rise.
Quartz.	Galena.	Quartz.	Galena.	Mm. per Second.	Mm. per Second.
(a) .0801	(a) .0194	(a) .00119	(a) .00076	0.00	1.25
.0835	.0198	.00132	.00078	1.25	2.5
.0568	.0292	.00224	.00115	2.5	5.0
.0772	.0412	.00304	.00162	5.0	7.5
.0992	.0488	.00397	.00192	7.5	10.0
.1428	.0613	.00561	.00242	10.0	15
.1875	.0721	.00739	.00284	15	20
.2954	.1062	.0089	.0041	20	30
.3416	.1305	.0135	.0051	30	40
.3880	.1404	.0153	.0055	40	50
.5941	.1708	.0206	.0067	50	60
.5992	.1997	.0232	.0079	60	70

(a) These figures have less value than the others, because the diameters in this case range from the figures given to zero.

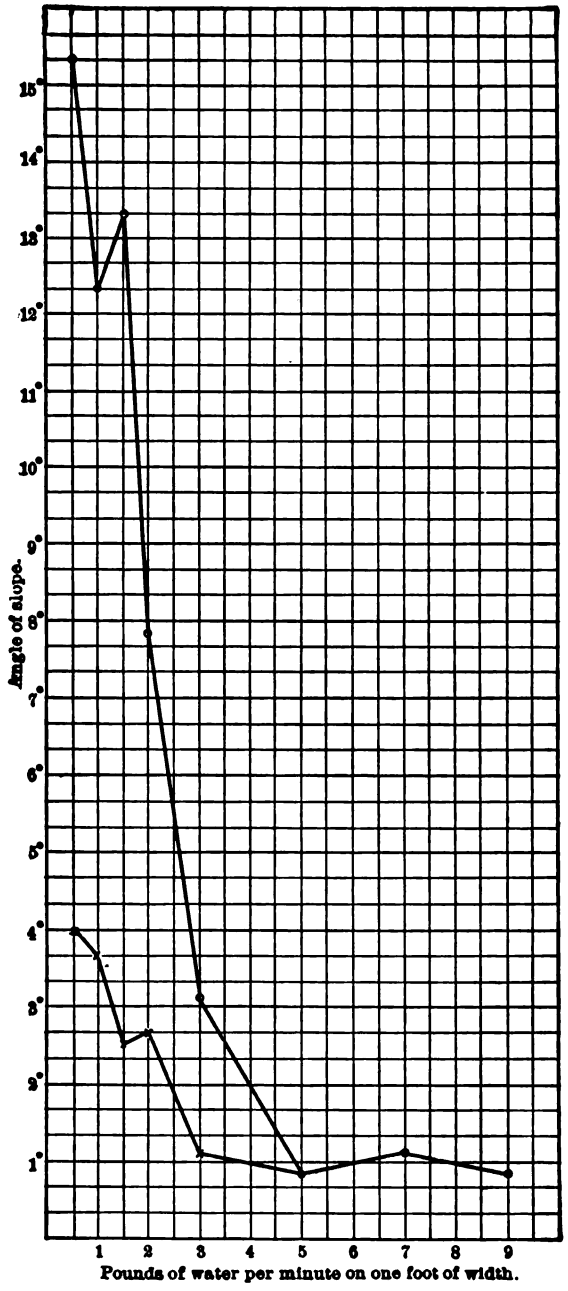

FIG. 405.—FINISH ANGLES OF QUARTZ AND GALENA, ON A SIZING SURFACE, FOR GRAINS THAT FALL IN QUIET WATER, AND RISE IN AN UPWARD CURRENT OF 1.25 MM. PER SECOND. o = GALENA OF 0.0194 MM. DIAMETER, × = QUARTZ OF 0.0301 MM. DIAMETER.

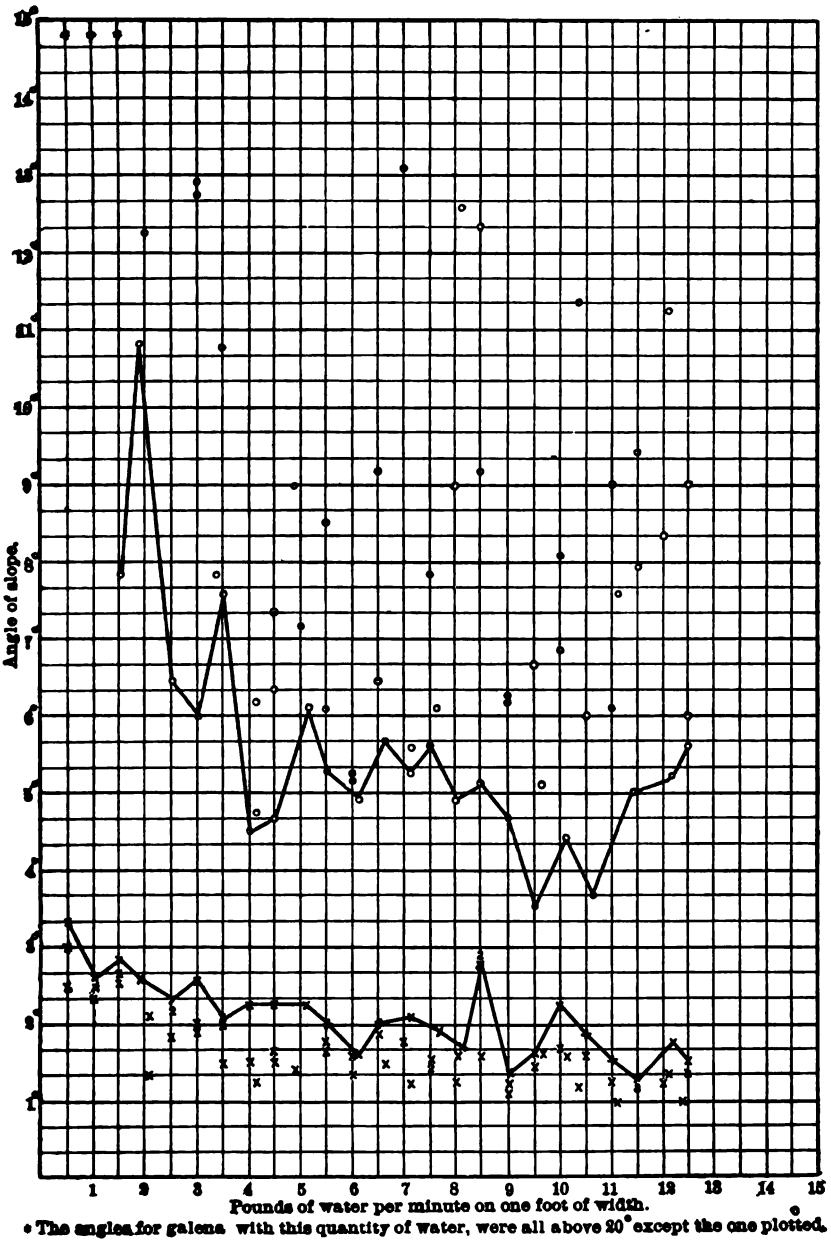

FIG. 406.—FINISH ANGLES OF QUARTZ AND GALENA, ON A SIZING SURFACE, FOR GRAINS THAT FALL IN AN UPWARD CURRENT OF 1.25 MM. PER SECOND, AND RISE IN AN UPWARD CURRENT OF 2.5 MM. PER SECOND. O = GALENA OF 0.0198 MM. DIAMETER, × = QUARTZ OF 0.0335 MM. DIAMETER.

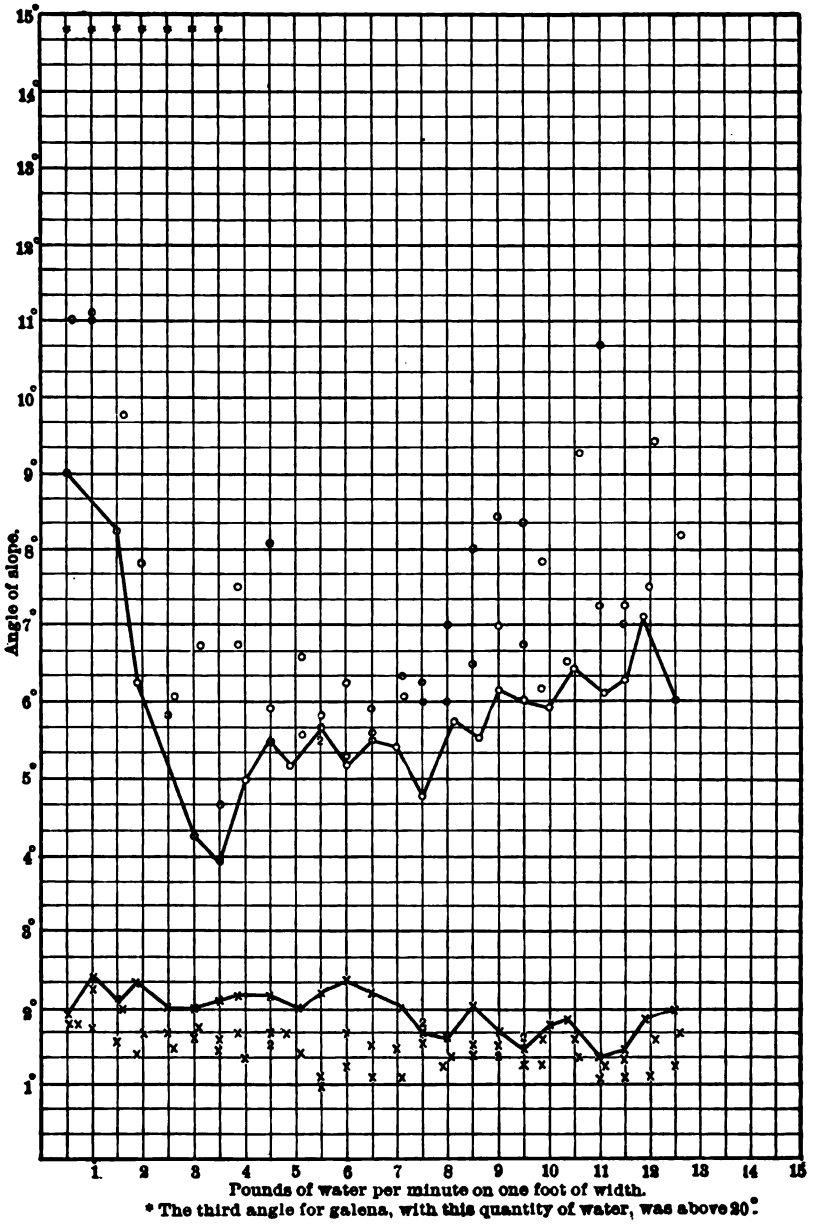

FIG. 407.—FINISH ANGLES OF QUARTZ AND GALENA, ON A SIZING SURFACE, FOR GRAINS THAT FALL IN AN UPWARD CURRENT OF 2.5 MM. PER SECOND, AND RISE IN AN UPWARD CURRENT OF 5.0 MM. PER SECOND, o = GALENA OF 0.0292 MM. DIAMETER, × = QUARTZ OF 0.0568 MM. DIAMETER.

The table experiments were made on a table that had a ground plate glass surface (see § 877). This table could be supplied with

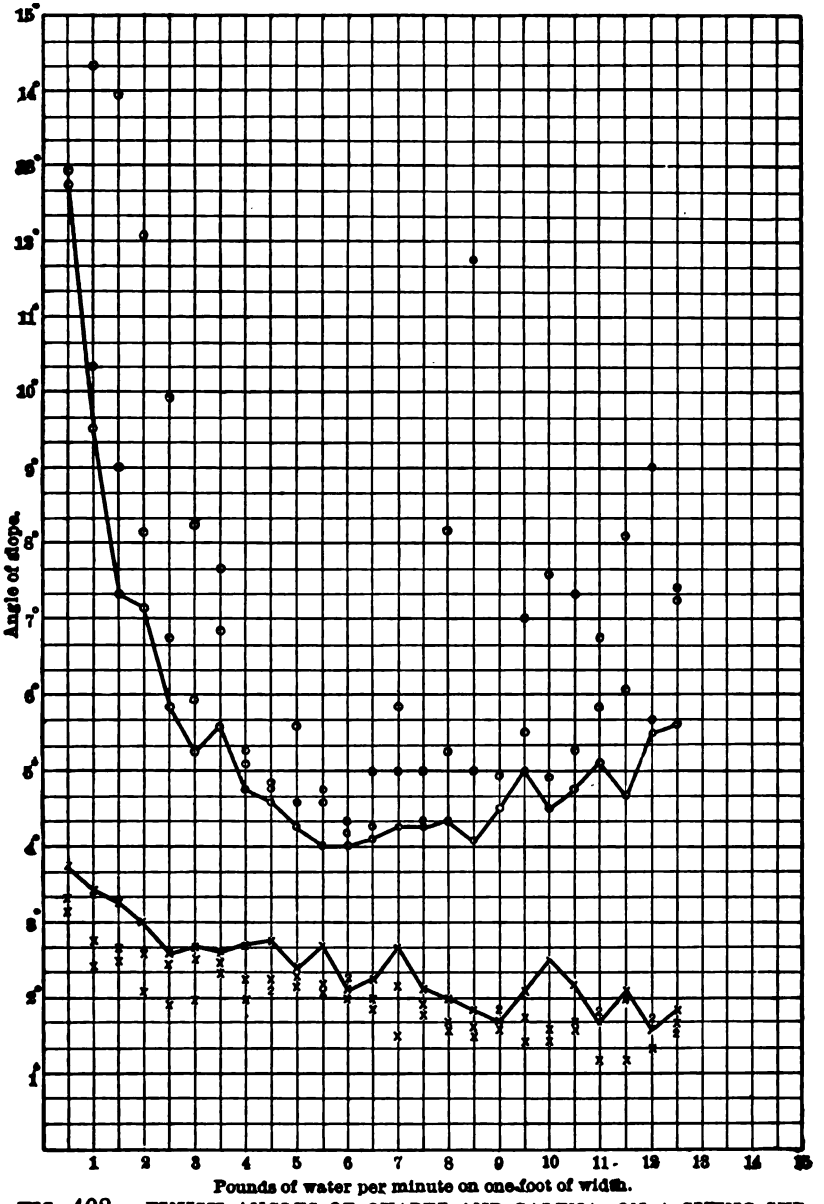

FIG. 408.—FINISH ANGLES OF QUARTZ AND GALENA, ON A SIZING SURFACE, FOR GRAINS THAT FALL IN AN UPWARD CURRENT OF 10 MM. PER SECOND, AND RISE IN AN UPWARD CURRENT OF 15 MM. PER SECOND. O = GALENA OF 0.0613 MM. DIAMETER, × = QUARTZ OF 0.1423 MM. DIAMETER.

any desired quantity of water distributed across its head, and could be set at any angle of slope. Experiments were tried upon each

slime sort with a great number of water quantities, beginning with very little and increasing for each test. In each test, after gauging the water to the desired amount, the table was set horizontal and a small quantity of the slime sort was spread out upon the surface in such a way that there should be the least

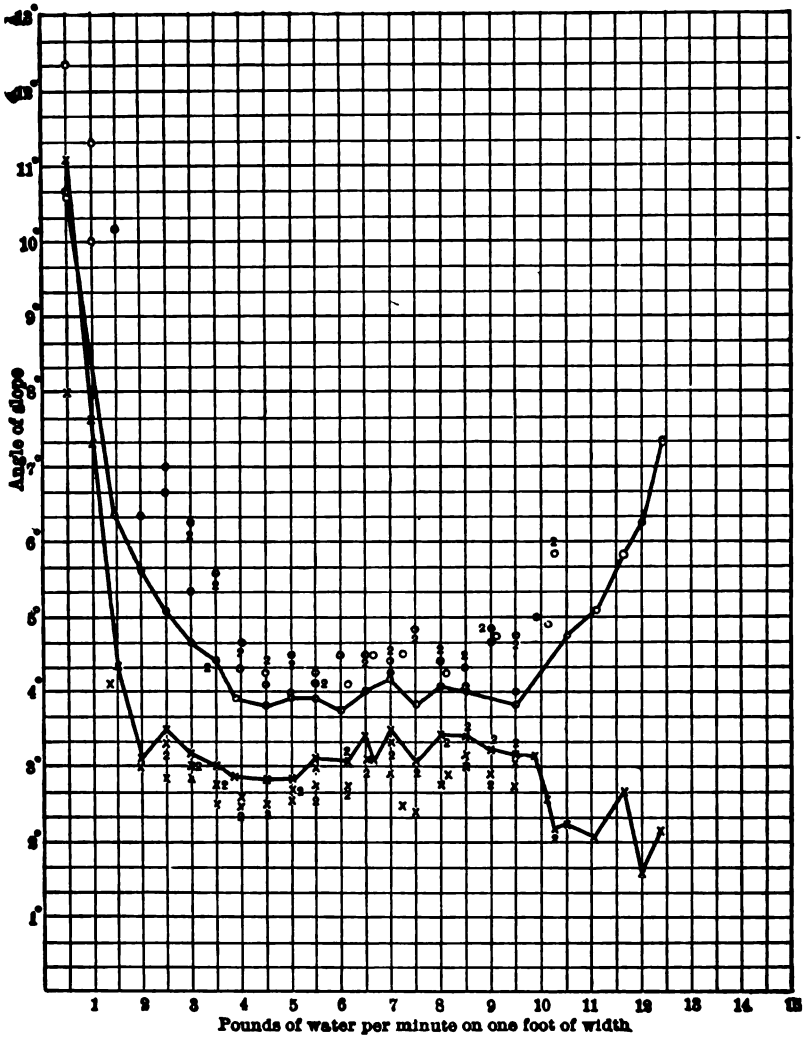

FIG. 409.—FINISH ANGLES OF QUARTZ AND GALENA, ON A SIZING SURFACE, FOR GRAINS THAT FALL IN AN UPWARD CURRENT OF 30 MM. PER SECOND, AND RISE IN AN UPWARD CURRENT OF 40 MM. PER SECOND. O = GALENA OF 0.1305 MM. DIAMETER, × = QUARTZ OF 0.3416 MM. DIAMETER.

possible interference of the grains with each other. The slope was then gradually increased until four events took place: (1) The first quartz grains started; (2) all the quartz moved; (3) the first galena grains started; (4) all the galena moved. The angle of slope was measured and recorded for each of the four events. The two angles at which respectively all of the quartz and all of the

galena moved, that is to say, events (2) and (4) (which will be referred to as the finish angles) are considered to be the most important measures. As a rule three experiments were tried with each water quantity, upon each sand or slime-sort. Tables 326 and 327 show the largest finish angle obtained for quartz and the smallest for galena. These angles have been chosen to bring out the least

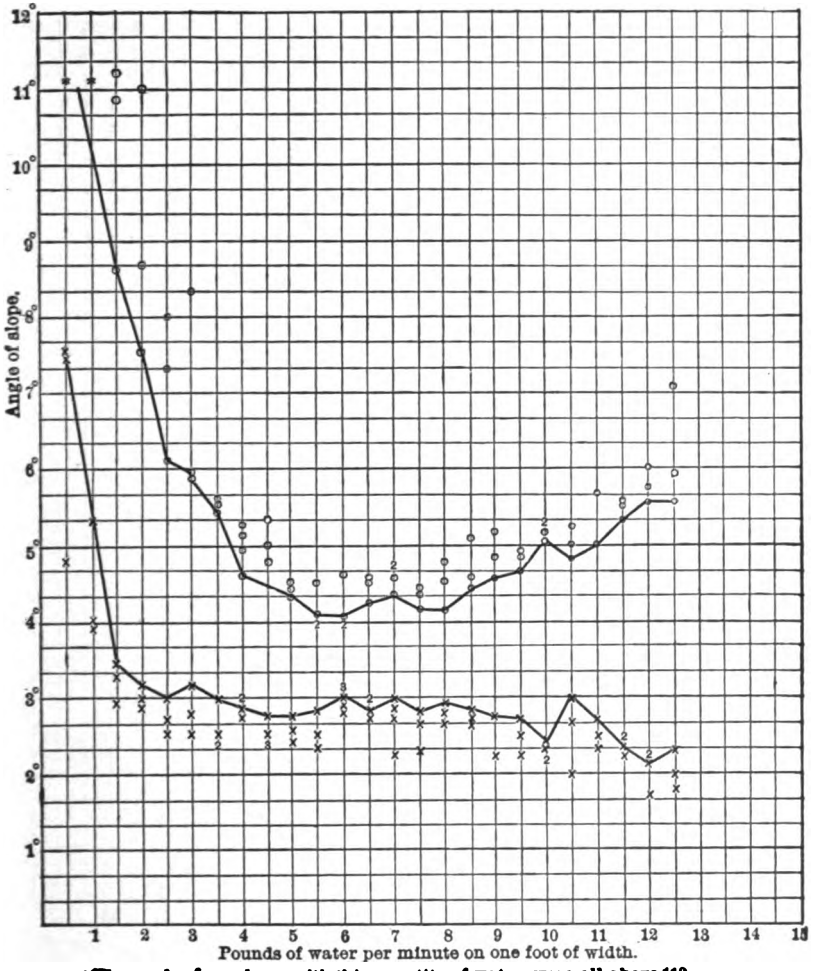

FIG. 410.—FINISH ANGLES FOR QUARTZ AND GALENA, ON A SIZING SURFACE, FOR GRAINS THAT FALL IN AN UPWARD CURRENT OF 40 MM. PER SECOND, AND RISE IN AN UPWARD CURRENT OF 50 MM. PER SECOND. O = GALENA OF 0.1404 MM. DIAMETER, × = QUARTZ OF 0.3880 MM. DIAMETER.

advantageous conditions found. The finish angles of all three experiments are plotted in Figs. 405 to 411. The little end of the series of water quantities for small grains was where the water failed to cover the table; for large grains it was where events (2) and (4) occurred at nearly the same angle. The large end of the series for the finest slime-sort was where events (2) and (4) took place

together; and for the others, it was where the water quantity was absurdly large.

It will be observed that the method employed was to measure angles, films, etc., at the moment when a body at rest began to move. If the opposite plan, namely, to measure angles, films, etc., when a moving body came to rest, had

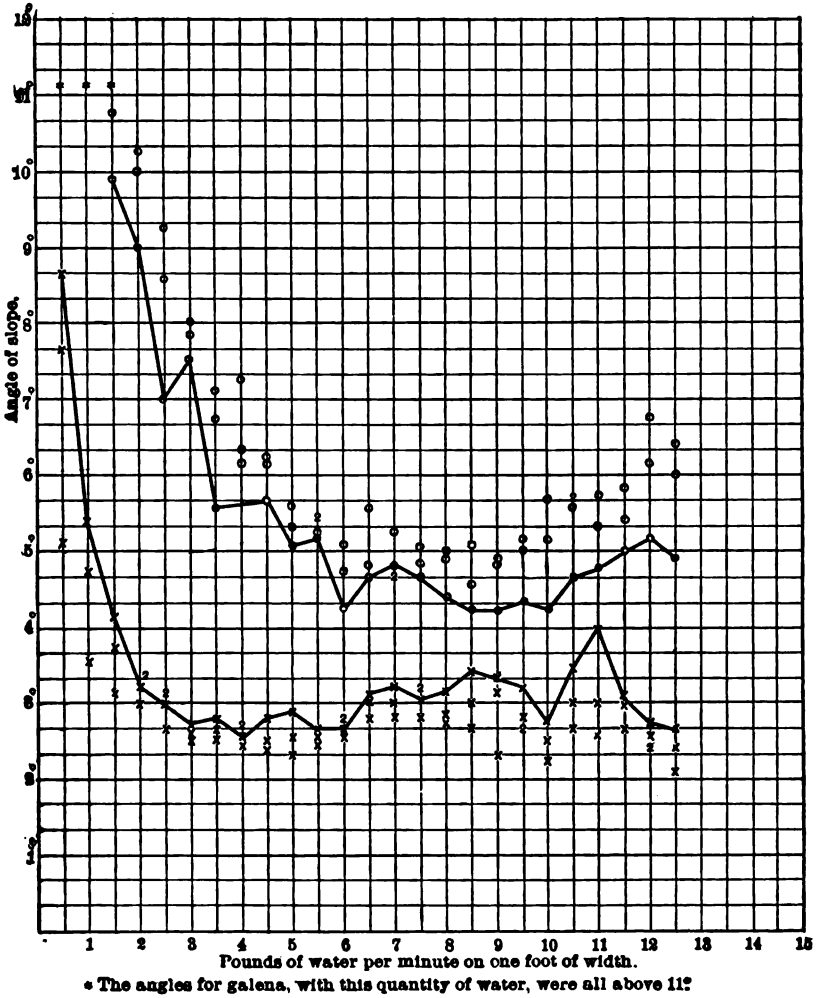

* The angles for galena, with this quantity of water, were all above 11°

FIG. 411.—FINISH ANGLES OF QUARTZ AND GALENA, ON A SIZING SURFACE, FOR GRAINS THAT FALL IN AN UPWARD CURRENT OF 60 MM. PER SECOND, AND RISE IN AN UPWARD CURRENT OF 70 MM. PER SECOND. O = GALENA OF 0.1997 MM. DIAMETER, × = QUARTZ OF 0.5892 MM. DIAMETER.

been adopted, it would have represented more exactly what happens upon a convex conical slime-table. The difficulties of making the tests by the latter method caused the selection of the former. The difference in results is that the figures for angles given in the table are slightly larger than they would be if the coming-to-rest method had been employed.

In examining the starting-angles of galena and quartz it was noticed that the

first grain of galena often starts at an angle smaller than the finish-angle of quartz; but for several reasons this is not as serious a matter as might appear. First, there were only a few light grains of galena that started before the last of the quartz; secondly, they moved slowly, so that the quartz easily overtook and left them behind; and, thirdly, the occurrence was confined to those experiments that were near the least water-quantity, and therefore outside the range of the best working conditions.

TABLE 326.—GALENA FINISH-ANGLES, AT WHICH ALL THE GRAINS MOVE.

Pounds of Water per Foot of Width per Minute.	Millimeters per Second of Current which Lifts the Particles. 1.25	2.5	5.0	15	40	50	70
	Millimeters per Second of Current in which the Particles Fall. 0	1.25	2.5	10	30	40	60
	Galena Finish-Angles (Minimum of Three Trials in Most Cases).						
0.5	15° 20′	.....	9° 00′	12° 45′	10° 40′	.....	.....
1.0	12° 20′	.....	11° 00′	9° 30′	10° 00′	.....	.....
1.5	13° 20′	7° 50′	8° 15′	7° 20′	6° 20′	8° 35′	9° 55′
2.0	7° 50′	10° 50′	6° 15′	7° 10′	5° 30′	7° 30′	9° 00′
2.5	.....	6° 25′	5° 50′	5° 50′	5° 05′	7° 10′	7° 00′
3.0	8° 05′	6° 00′	4° 15′	5° 15′	4° 40′	5° 55′	7° 30′
3.5	.....	7° 35′	3° 55′	5° 35′	4° 25′	5° 25′	5° 35′
4.0	.....	4° 30′	5° 00′	4° 45′	3° 55′	4° 55′	6° 10′
4.5	.....	4° 40′	5° 30′	4° 35′	3° 55′	4° 45′	5° 40′
5.0	0° 50′	6° 05′	5° 10′	4° 15′	4° 00′	4° 20′	5° 05′
5.5	.....	5° 15′	5° 40′	4° 00′	4° 00′	4° 05′	5° 10′
6.0	.....	4° 55′	5° 10′	4° 00′	3° 50′	4° 05′	4° 15′
6.5	.....	5° 40′	5° 30′	4° 05′	4° 00′	4° 15′	4° 40′
7.0	1° 05′	5° 15′	5° 25′	4° 15′	4° 10′	4° 20′	4° 50′
7.5	.....	5° 35′	4° 45′	4° 15′	3° 50′	4° 10′	4° 40′
8.0	.....	4° 55′	5° 45′	4° 20′	4° 05′	4° 10′	4° 25′
8.5	.....	5° 05′	5° 30′	4° 05′	4° 00′	4° 25′	4° 15′
9.0	0° 50′	4° 40′	6° 10′	4° 30′	4° 40′	4° 35′	4° 15′
9.5	.....	3° 30′	6° 00′	5° 00′	3° 50′	4° 40′	4° 15′
10.0	.....	4° 25′	5° 55′	4° 30′	4° 55′	5° 05′	4° 15′
10.5	.....	3° 40′	6° 25′	4° 45′	4° 45′	4° 50′	4° 45′
11.0	.....	6° 05′	6° 05′	5° 05′	5° 05′	5° 00′	4° 50′
11.5	.....	5° 00′	6° 15′	4° 40′	5° 50′	5° 20′	5° 05′
12.0	.....	5° 10′	7° 05′	5° 30′	6° 10′	5° 30′	5° 10′
12.5	.....	5° 35′	6° 00′	5° 35′	7° 20′	5° 30′	4° 55′

TABLE 327.—QUARTZ FINISH-ANGLES, AT WHICH ALL THE GRAINS MOVE.

Pounds of Water per Foot of Width per Minute.	Millimeters per Second of Current which Lifts the Particles. 1.25	2.5	5.0	15	40	50	70
	Millimeters per Second of Current in Which the Particles Fall. 0	1.25	2.5	10	30	40	60
	Quartz Finish-Angles (Maximum of Three Trials in Most Cases).						
0.5	4°	3° 20′	1° 55′	3° 45′	11° 05′	7° 30′	8° 40′
1.0	3° 40′	2° 35′	2° 25′	3° 25′	7° 30′	5° 20′	5° 25′
1.5	2° 30′	2° 50′	2° 05′	3° 15′	4° 20′	3° 25′	4° 10′
2.0	2° 40′	2° 30′	2° 20′	3° 00′	3° 50′	3° 10′	3° 15′
2.5	.....	2° 20′	2° 00′	2° 35′	3° 30′	3° 00′	3° 00′
3.0	1° 05′	2° 35′	2° 00′	2° 40′	3° 10′	3° 10′	2° 45′
3.5	.....	2° 05′	2° 05′	2° 35′	3° 00′	2° 55′	2° 50′
4.0	.....	2° 15′	2° 10′	2° 40′	2° 50′	2° 50′	2° 35′
4.5	.....	2° 15′	2° 10′	2° 45′	2° 50′	3° 05′	2° 50′
5.0	0° 50′	2° 15′	2° 00′	2° 25′	2° 50′	2° 45′	2° 55′
5.5	.....	2° 00′	2° 15′	2° 45′	3° 05′	2° 50′	2° 40′
6.0	.....	1° 35′	2° 20′	2° 05′	3° 05′	3° 00′	2° 40′
6.5	.....	0° 00′	2° 10′	3° 15′	3° 25′	2° 50′	3° 10′
7.0	1° 05′	2° 05′	2° 00′	2° 40′	3° 30′	2° 55′	3° 15′
7.5	.....	1° 55′	1° 40′	2° 05′	3° 05′	2° 50′	3° 05′
8.0	.....	1° 40′	1° 35′	2° 00′	3° 30′	2° 55′	3° 10′
8.5	.....	2° 45′	2° 00′	1° 50′	3° 30′	2° 50′	3° 35′
9.0	0° 50	1° 20′	1° 40′	1° 40′	3° 15′	2° 45′	3° 25′
9.5	.....	1° 35′	1° 35′	2° 05′	3° 10′	2° 45′	3° 15′
10.0	.....	2° 15′	1° 45′	2° 30′	3° 10′	2° 25′	2° 45′
10.5	.....	1° 50′	1° 50′	2° 10′	2° 15′	3° 05′	3° 30′
11.0	.....	1° 30′	1° 20′	1° 40′	2° 05′	2° 45′	4° 00′
11.5	.....	1° 15′	1° 25′	2° 05′	2° 40′	2° 20′	3° 05′
12.0	.....	1° 45′	1° 50′	1° 35′	1° 35′	2° 10′	2° 45′
12.5	.....	1° 30′	1° 55′	1° 50′	2° 10′	2° 20′	2° 40′

In each of the above experiments the thickness of the water film was measured,

each time that the slope of the table was measured, by means of a special gauge (see § 884). When the film was broken into waves, both the crest and the trough of the waves were measured. In order to get average values, these meas-

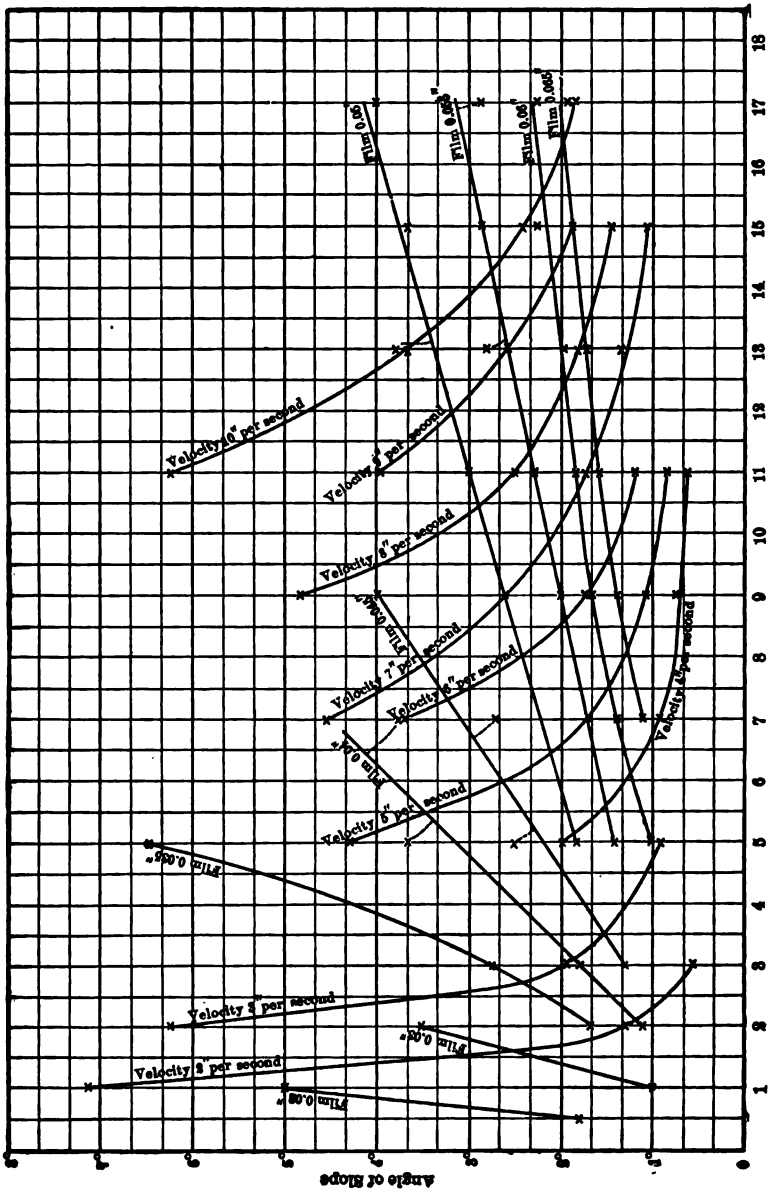

FIG. 412.—AVERAGE VELOCITIES OF CURRENTS ON A SIZING SURFACE (IN INCHES PER SECOND), AND THICKNESS OF FILMS (IN HUNDREDTHS OF AN INCH).

ures were all plotted, each plot representing a single rate of flow, and average curves were drawn. The complete set of average values is given in Table 328. For convenience the films were measured at a point where there were no ore

grains, and hence the figures may be a little smaller than on a table that had ore on its entire surface. From the figures in Table 328 the average depth of the

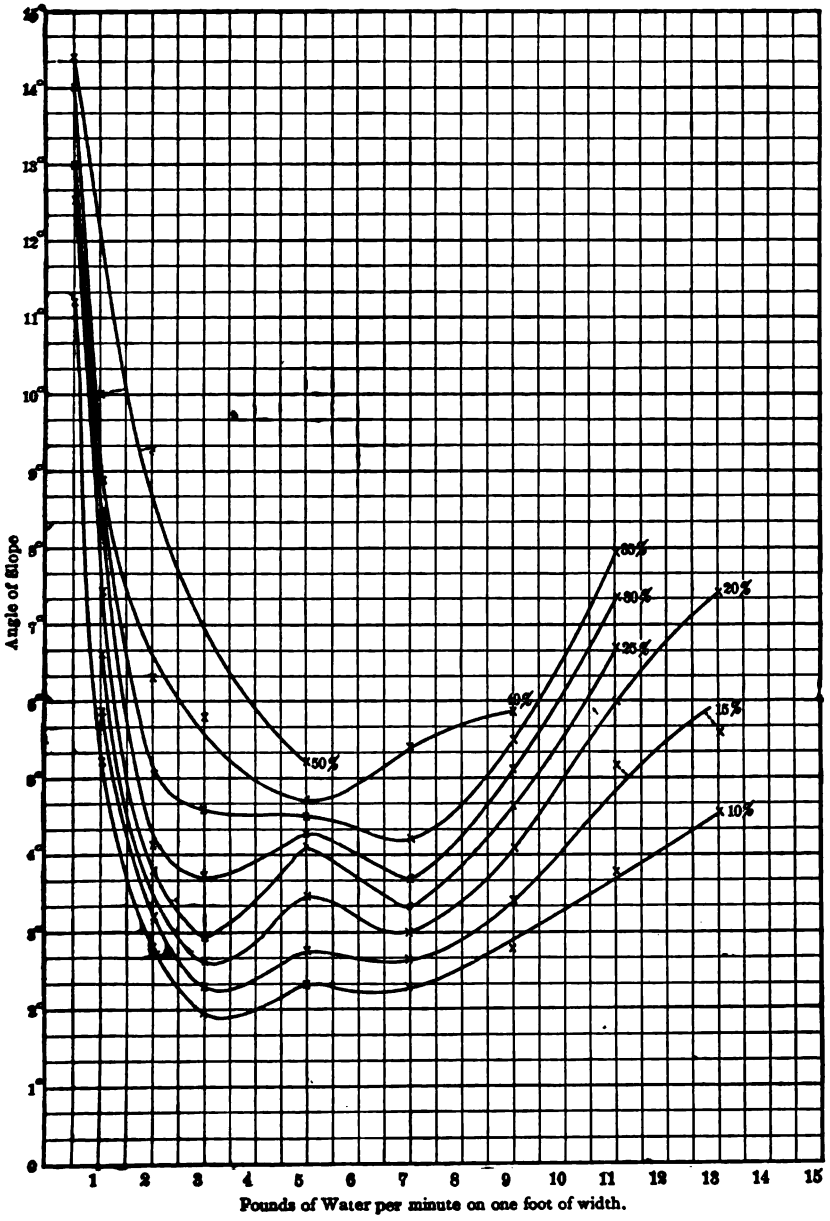

FIG. 413.— HEIGHT OF WAVE ON A SIZING SURFACE, IN PER CENT. OF THE HEIGHT OF THE TROUGH.

water has been calculated by assuming it to be the height of the trough plus one-third the added height of the crest, and these average thicknesses are shown

in Fig. 412. The film is practically always broken into waves, and these have the effect of moving the ore faster than otherwise, the wave in fact acting for an instant like a thick film. The formation of waves varies with the quantity of water and the slope, as is well shown in Fig. 413. The lines marked 10%, 15%, 20% and so on, trace out that part of the field where the crest is elevated above the trough to a height of 10%, 15%, 20%, and so on, of the thickness of the trough.

TABLE 328.—AVERAGE THICKNESS OF WATER FILMS ON SLIME TABLES, IN INCHES.

Slope of Table.	Pounds of Water per Minute Flowing over 1 Foot Width of Surface.													
	0.25		0.5		1		2		3		5		7	
	Crest.	Trough.	Crest.	Trough.	Crest.	Trough.	Crest.	Trough.	Crest.	Trough.	Crest.	Trough.	Crest.	Trough.
0° 15′	.....	.100	.....	.085	.....	.070	.....	.065	.....	.067	.....	.130	.....	.150
1°	.....	.018	.....	.024	.....	.030	.....	.041	.....	.048	.....	.060	.....	.067
2°	.....	.014	.....	.019	.....	.024	.....	.032	.041	.037	.050	.047	.052	.049
3°	.....	.012	.....	.018	.....	.021	.030	.027	.039	.031	.047	.040	.048	.040
4°	.....	.011	.....	.017	.021	.020	.031	.024	.039	.029	.047	.035	.047	.035
5°	.....	.010	.....	.016	.021	.020	.031	.023	.039	.029	.047	.032	.047	.034
6°	.....	.010	.....	.015	.022	.019	.032	.023	.040	.028	.047	.029	.047	.033
7°	.....	.010	.....	.015	.022	.018	.032	.022	.040	.028	.048	.028	.....	.....
8°	.....	.010	.....	.014	.022	.017	.032	.022	.041	.028	.....	.....	.....	.....
9°	.....	.010	.....	.013	.024	.017	.032	.022	.....	.....	.....	.....	.....	.....
10°	.....	.010	.....	.012	.024	.016	.032	.021	.....	.....	.....	.....	.....	.....
11°	.....	.010	.013	.012	.025	.015	.032	.021	.....	.....	.....	.....	.....	.....
12°	.....	.009	.013	.011	.025	.014	.....	.....	.....	.....	.....	.....	.....	.....
13°	.....	.009	.013	.010	.026	.013	.....	.....	.....	.....	.....	.....	.....	.....
14°	.....	.009	.014	.010	.....	.....	.....	.....	.....	.....	.....	.....	.....	.....
15°	.....	.009	.015	.009	.....	.....	.....	.....	.....	.....	.....	.....	.....	.....
16°	.....	.009	.016	.009	.....	.....	.....	.....	.....	.....	.....	.....	.....	.....
17°	.....	.009	.016	.008	.....	.....	.....	.....	.....	.....	.....	.....	.....	.....
18°	.....	.....	.016	.008	.....	.....	.....	.....	.....	.....	.....	.....	.....	.....
19°	.....	.....	.017	.007	.....	.....	.....	.....	.....	.....	.....	.....	.....	.....
20°	.....	.....	.017	.007	.....	.....	.....	.....	.....	.....	.....	.....	.....	.....

Slope of Table.	Pounds of Water per Minute Flowing over 1 Foot Width of Surface.												
	9		11		13		15		17		27	35	43
	Crest.	Trough.	Crest.	Trough.	Crest.	Trough.	Crest.	Trough.	Crest.	Trough.			
0° 15′	.....	.150	.....	.170	.....	.195	.....	.165	.....	.200	.200	.219	.222
1°	.072	.071	.....	.076	.....	.081	.....	.084	.....	.089	.100	.116	.133
2°	.056	.053	.058	.056	.....	.059	.063	.062	.....	.062	.076	.089	.101
3°	.050	.045	.052	.049	.055	.053	.055	.053	.....	.054	.067	.076	.084
4°	.050	.042	.050	.045	.052	.048	.050	.047	.....	.050	.060	.066	.075
5°	.050	.039	.049	.043	.049	.044	.046	.043	.....	.047	.054	.061	.069
6°	.051	.036	.048	.040	.047	.040	.044	.041	.....	.045	.051	.058	.....
7°	.....	.....	.047	.037	.045	.038	.043	.040	.....	.043	.049	.....	.....
8°	.....	.....	.046	.034	.044	.036	.....	.....	.043	.042	.....	.....	.....

The average velocities of the currents obtained in the experiments have been computed, upon the assumption that the average thickness of the film is equal to that of the trough plus one-third of the difference between the trough and the crest, and are given in Table 329 and Fig. 412. These figures give average velocities, and do not show either the slow bottom current or the quick top current. Fig. 412 indicates that with 7½ pounds of water per minute flowing over each foot of table width, and with a slope of 1° 30′, the velocity would be 5 inches per second, and that the same velocity would occur with 5½ pounds of water on a 3° 30′ slope; but the bottom velocities may be quite different in the two cases, because one of the films is 50% deeper than the other. Hence the two sets of conditions may suit quite different qualities of sand.

TABLE 329.—AVERAGE VELOCITY OF WATER CURRENT ON SLIME TABLES, IN INCHES PER SECOND.

Slope of Table.	Pounds of Water per Minute Flowing over 1 Foot Width of Surface.														
	0.25	0.5	1	2	3	5	7	9	11	13	15	17	27	35	43
0° 15′	0.1	0.23	0.55	1.17	1.72	1.48	1.79	2.31	2.50	2.56	3.50	3.27	5.19	6.16	6.31
1°	0.53	0.80	1.28	1.85	2.40	3.20	4.02	4.88	5.58	6.17	6.87	7.34	10.39	11.62	12.45
2°	0.69	1.01	1.60	2.37	3.08	4.00	5.38	6.41	7.55	8.45	9.30	10.51	13.30	15.15	16.35
3°	0.80	1.07	1.88	2.71	3.38	4.56	6.26	7.36	8.50	9.41	11.09	12.05	15.45	17.75	19.70
4°	0.87	1.13	1.92	2.91	3.59	4.92	6.90	7.70	9.08	10.18	12.01	13.05	17.30	20.50	22.10
5°	0.96	1.20	1.92	3.03	3.59	5.19	7.08	8.05	9.41	11.10	13.10	13.90	19.22	22.10	23.90
6°	0.96	1.28	1.92	3.03	3.59	5.49	7.27	8.45	9.87	11.85	13.70	14.50	20.80	23.25	.....
7°	0.96	1.28	2.03	3.03	3.59	5.65	.....	.....	10.59	12.48	14.05	15.20	21.20	.....	.....
8°	0.96	1.37	2.03	3.03	3.59	.....	.....	.....	11.15	13.15	.....	15.55	.....	.....	.....
9°	0.96	1.48	2.03	3.03	.....	.....	.....	.....	.....	.....	.....	.....	.....	.....	.....
10°	0.96	1.60	2.14	3.17	.....	.....	.....	.....	.....	.....	.....	.....	.....	.....	.....
11°	0.96	1.60	2.14	3.17	.....	.....	.....	.....	.....	.....	.....	.....	.....	.....	.....
12°	1.07	1.60	2.27	.....	.....	.....	.....	.....	.....	.....	.....	.....	.....	.....	.....
13°	1.07	1.74	2.27	.....	.....	.....	.....	.....	.....	.....	.....	.....	.....	.....	.....
14°	1.07	1.74	.....	.....	.....	.....	.....	.....	.....	.....	.....	.....	.....	.....	.....
15°	1.07	1.74	.....	.....	.....	.....	.....	.....	.....	.....	.....	.....	.....	.....	.....
16°	1.07	1.74	.....	.....	.....	.....	.....	.....	.....	.....	.....	.....	.....	.....	.....
17°	1.07	1.92	.....	.....	.....	.....	.....	.....	.....	.....	.....	.....	.....	.....	.....
18°	.....	1.92	.....	.....	.....	.....	.....	.....	.....	.....	.....	.....	.....	.....	.....
19°	.....	1.92	.....	.....	.....	.....	.....	.....	.....	.....	.....	.....	.....	.....	.....
20°	.....	1.92	.....	.....	.....	.....	.....	.....	.....	.....	.....	.....	.....	.....	.....

§ 509. DISCUSSION OF THE EXPERIMENTAL RESULTS.—By examining the curves of quartz and galena we see that they all drop from the left where the water quantity is small, the galena being considerably higher than the quartz. The quartz curve then runs in nearly a straight line to the right, where the water quantity is large. The galena runs part way across nearly parallel to the quartz and then rises up into high angles. The galena curve may be said, therefore, to have a peculiar sag in it between 5 and 10 pounds of water. The wave curves (Fig. 413) appear to account for this sag in the galena curves, as the former have a sag which corresponds to that in the galena curves, showing that the waves serve to start the galena moving at lower angles than it would move without them. The only exception is the curve of galena for grains which rise in 1.25-mm. current. In this the quartz and galena are washed off together at very low angles when the water is more than 4 pounds.

The Choice of Slope for a Table.—If the quartz finish angle is assumed to be the right one for tables then it is clear that the wider the space between the quartz and galena curves the better will the separation be. This indicates better treatment with less than 5 pounds of water or with more than 10 pounds than between the two. The latter field, however, is not so much behind the other two in its work as the curves might imply, because the galena is practically not moving at all when the quartz is nearly all rolling. If, on the other hand, the finish angle of galena be chosen as the right one for tables, then the discrepancies between the three fields, namely, below 5 pounds, between 5 pounds and 10 pounds, and above 10 pounds, would probably disappear altogether, for whatever effect the waves had in hurrying the galena off the table with 5 to 10 pounds of water would hurry off the quartz still faster. If the quartz angle be chosen, the quartz will move away leaving the galena stationary. The act is like that of a boat sailing away from her moorings. The separation is made by the departure of the quartz from company with galena. If the galena angle is used, a race is initiated in which the quartz beats. The two catch words "departure" and "race" seem to express the difference in principle between the two methods. The capacity of a table with the quartz angle will be much less than with the galena angle, as the particles will move down the slope much more slowly; and the concentrates are apt to be less clean, because the solid bank of galena tends to entangle grains of quartz except with large quantities of water.

The following table, compiled from Tables 326 and 327, shows a suggested

grouping of sand and slime sorts that are probably suitable for separating chalcopyrite (specific gravity 4) or blende (specific gravity 4) from quartz (specific gravity 2.6). When galena (specific gravity 7.5) is to be separated from quartz, probably two groups, 32—1.25 and 1.25—0 mm. per second settling velocity, will be all that are needed, instead of the last three shown in the table. Com-

SUGGESTED CLASSIFICATION OF SLIMES FOR SLIME TABLES.

	Diameter of Grains.	Currents in which Grains Settle.	Pounds of Water per Minute per Foot of Width.					
			1½	2	4	5	6	12
	Mm.	Mm. per Second.	Slopes at which all Grains Roll.					
Quartz	0.25–0.589	32–70	4° 20′	3° 50′	2° 50′	2° 55′	3° 05′	2° 45′
Galena	0.119–0.199		9° 55′	9° 00′	6° 10′	5° 05′	4° 15′	6° 10′
Quartz	0.0911–0.25	9–32	4° 20′	3° 50′	2° 50′	2° 50′	3° 05′	1° 35′
Galena	0.047–0.119		7° 20′	7° 10′	4° 45′	4° 15′	4° 00′	6° 10′
Quartz	0.0335–0.0911	1.25–9	3° 15′	3° 00′	2° 40′	2° 25′	2° 20′	1° 50′
Galena	0.0198–0.047		8° 15′	10° 50′	5° 00′	6° 05′	5° 10′	7° 05′
Quartz	0–0.0335	0–1.25	2° 30′	2° 40′	.....	0° 50′	.....	.....
Galena	0–0.0198		13° 20′	7° 50′	.....	0° 50′	.....	.....

paring the above figures of slime sorts with those used in the mills, we find that the mills treat together all the ore that will rise in a current of 25 or 30 mm. a second, and they do this with chalcopyrite as well as with galena. Comparing the figures in regard to slope, we find that in the mills the galena finish angle, or an angle a little steeper, is the one which has been empirically settled upon. We do not find in the mills, however, the chief law which seems to be established by these tests, namely, that with coarse sand sorts we need gentle slope and much water, while with fine sand sorts we need steep slope and little water. The experiments suggested the following as probably the best slopes and water quantities:

	Slope.	Water Quantity per Foot of Circumference.
For coarse pulp, 32–70 mm. settling velocity	2° 45′	12 pounds.
For medium pulp, 1.25–32 mm. settling velocity	5° to 6°	5 to 6 pounds.
For finest pulp, 0–1.25 mm. settling velocity	8° to 10°	2 pounds.

The coarse sand sort (32—70 mm. settling velocity) is put in the table because of preliminary experiments which the author believes show that such a sand sort may in some cases be advantageously treated upon a slime table. His tests indicate that with 12 pounds of water or more, the speed with which these coarse grains move is so great that the quartz finish angle is the one best suited for their treatment. This might be used for phosphates, pyrite, or any mineral of not too high value which had to be treated in large quantity, where water was abundant or could be cheaply pumped.

It will be noted that the experiments were made upon a rectangular plane table, while the mills employ convex conical tables; and it may be said that on the rectangular table there is not the change in depth and velocity of water that occurs in passing from the center to the circumference of a conical table. This change, however, is very slight, for a distance of one or two feet next to the circumference; and if the water is adjusted for this portion of the table the conditions will be nearly the same on a convex as on a plane table.

D. Riffles.

§ 510. The term *riffles* has been used indiscriminately, to designate either the blocks placed in a trough or sluice to hold back heavy minerals, or to designate the pockets between the blocks. In the following pages the pockets are called

the riffles, and the blocks are called riffle blocks. When a stream of water, carrying sand and gravel, passes over riffles the agitation due to the current softens up the deposit, and the quartz, being lighter, rises and is carried along by the current, while the heavier minerals, including gold, platinum, precious stones, garnet and black sand, mostly remain in the riffles.

Riffles find their principal use in hydraulic mining, which is so large a subject that it requires a treatise of its own. The reader is referred to Bowie's "Hydraulic Mining," to an article by Waldeyer in Raymond's Report of the Mineral Resources West of the Rocky Mountains for 1873, and to an article by Hammond in the Ninth (1889) Annual Report of the California State Mineralogist. The author will, however, describe various forms of riffles, and some of the ways in which they are used in ore dressing. It is quite pertinent here to repeat that the Wilfley table owes its capacity and efficiency largely to its riffles.

In general the design of sluice and riffle block which most systematically combines spaces of quick current followed by spaces of comparative rest (eddies), often repeated, most successfully fills the requirements. The eddies, however, must not be too quiet or they will fill with quartz at the start and never change.

FORMS OF RIFFLES.

TIMBER RIFFLE BLOCKS are square wooden blocks 8 to 13 inches high, set on end in rows across a sluice or trough. Each row of blocks is separated from the next by riffle strips 1¼ inches thick and 2 to 3 inches wide, nailed to them (see Fig. 419). They are held in place by wooden wedges against the sides of the sluice. Bowie states that these riffle blocks are better than all others where timber is not too dear, and that the cross riffle they make is not excelled by any other form. In choosing wood he prefers that which is long grained and brooms up well. Hard timber which wears smooth, such as oak, is not desirable. Nut pine is best, and pitch pine answers all requirements.

ROCK RIFFLES do good work. They are made by placing cobble stones on end and close together in a sluice, the tops of the stones being pointed slightly down the slope. To keep the rocks in place, a cross plank is placed in the bottom of the sluice every 6 or 8 feet. In some cases rock riffles have been preferred to timber, but they take longer to clean up and to re-set. They require a steeper grade than block riffles.

BAR RIFFLES are made by putting cross bars in the bottom of a sluice. Blocks or bars 1 to 2 inches high are common practice, but the spaces vary greatly (from an inch or two to several feet). John M. Sweeney[48] found that the form shown in Fig. 414*a* was much more efficient for separating gold from quartz and black sand than the form shown in Fig. 414*b*.

A modification of the *Robinson riffle* is shown in Fig. 415*a*. Each riffle is 12 inches wide, 12 inches long and about 3 inches deep in the middle. These riffles have been successfully used in a cyanide leaching plant[49] to catch the coarse gold in the tailings, by means of mercury placed in the riffles at *A*. The sulphurets collected at *B*. At this same plant the original form of Robinson riffle (Fig. 415*b*), allowed the sulphurets to collect and pack at *B* so that the free gold could not come in contact with the mercury at *A*.

FIG. 414*a*.—RIFFLES.

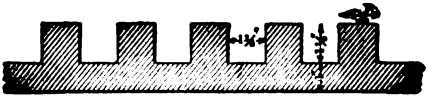

FIG. 414*b*.—RIFFLES.

EXPANDED METAL RIFFLES (Fig. 416) are very commonly used on gold dredges in connection with cocoa matting (§ 505). The usual size for this purpose has meshes 4½ inches long, and 2½ inches wide, and is made of steel about 0.08 inch thick. It is laid on top of the cocoa matting after the latter is spread on the inclined tables, and is found very efficient in arresting the gold. The flat surfaces of the metal strands slope about 45°; and to be most effective, the tops of the strands must be pointed down the slope. They have but little catching power when laid the opposite way.

HOWLAND RIFFLES (Fig. 417) are made of cast iron, and are in sections or blocks which are honeycombed by perforations, and superficially roughened by grooves as follows: The blocks are 12 inches long, 4 inches wide, and are higher

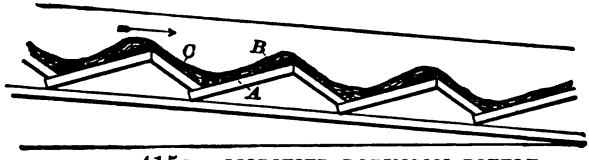

FIG. 415*a*.—MODIFIED ROBINSON RIFFLE.

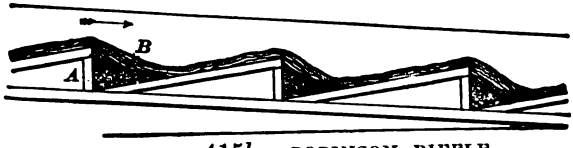

FIG. 415*b*.—ROBINSON RIFFLE.

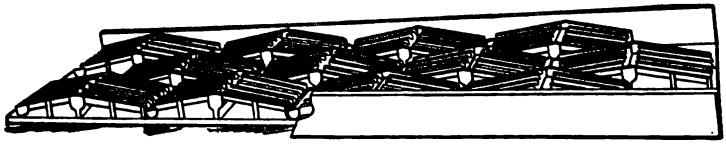

FIG. 417.—HOWLAND RIFFLES.

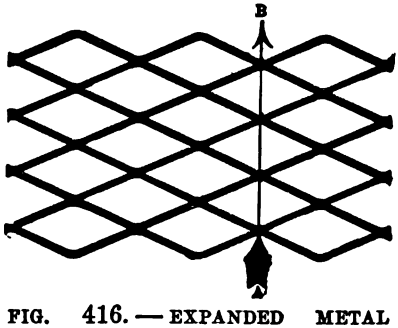

FIG. 416. — EXPANDED METAL RIFFLES.

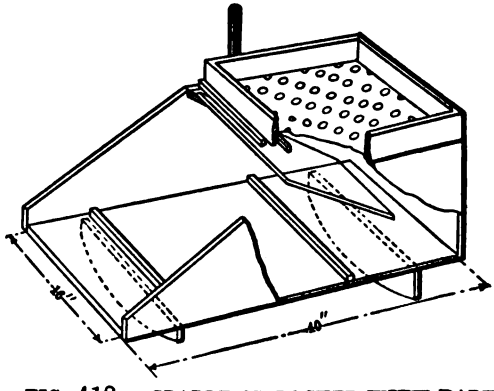

FIG. 418.—CRADLE OR ROCKER WITH PART OF SIDE CUT AWAY.

across the center than across the two ends. Deep cross troughs are made at the center and at the upper ends, which are to be charged with mercury; longitudinal, shallow grooves run down the slopes from the center to the ends, and between these grooves are slots which extend vertically through the castings. The blocks may be put together sidewise to suit the width of any trough whose width is a

multiple of 4 inches, and they are so placed as to break joint with each other longitudinally and so increase the eddying action of the riffles. It will be seen that any heavy particles that find their way beneath one of the castings are retained there

In Mill 82 there are two sluices fitted with Howland riffles, each fed with stamp mill pulp. The sluice is 12 inches wide, 8½ inches deep, and slopes 6°, 30′.

APPLICATION OF RIFFLES.

§ 511. THE CRADLE OR ROCKER (Fig. 418) is a box about 40 inches long and from 16 to 20 inches wide, mounted on transverse rockers, and having the back end closed and the front end open. The sides slope up from the front toward the back end to a height of 12 to 20 inches. A screen box 16 to 20 inches square and 4 to 6 inches deep, having a perforated screen with ½-inch holes, is set on top at the back end. Beneath this is a backward sloping baffle board, or an apron made of canvas or of blanket. On the bottom of the cradle are two riffle cleats about ¾ inch high, one near the middle and one near the lower end. The method of working is to shovel gravel into the screen box, and to pour in water from a dipper while rocking the cradle by hand. The apron throws the screenings backward, and when it is made of canvas or blanket it catches some of the fine gold. The coarse gold is caught in the bottom riffles. The sand quite easily packs in these riffles if the rocking is not kept up, and this leads to loss of gold. For convenience in cleaning up, the screen box and apron can be lifted out. What is caught on the apron and in the riffles is washed in a hand pan to remove the last of the sand. The cradle is a regular tool for washing auriferous gravel on a small scale; and is also used to clean up sluices and quartz mills.

THE SLUICE, as the term is used in placer working, is both a trough for transporting water and gravel, and a concentrator for catching and holding, by riffles, any heavy grains the gravel may contain (see Fig. 419).

Many forms of riffle blocks have been used in sluices and their designs are usually governed by three considerations: (1) The first cost and life; (2) the effectiveness of the riffles; and (3) the ease with which they are cleaned up and reset.

Bowie gives the grade of a sluice at 6 to 6½ inches fall for a 12-foot box (2° 25′ to 2° 35′). In some places where much clay is to be washed off 9 to 12 inches (3° 35′ to 4° 45′) is used, and where a minimum grade must be used, as low as 2½ to 3 inches (1° to 1° 10′) for a 16-foot box has been used. His figures on sizes and carrying power of sluices are as follows:

Depth.	Width.	Grade.	Capacity in Miner's Inches of Water.
36 inches.	6 feet.	2° 15′ to 2° 50′	2,000 to 3,500
30 "	4 "	2° 15′	2,000
30 "	3 "	0° 50′	600 to 1,000

In Mill 79, thirteen riffle boxes, 103 feet long, 12 inches wide, 8 inches deep, with sides and bottom made of 2-inch plank, are placed side by side, sloping 1° 25′ ($\frac{3}{16}$ inch per foot). They have movable riffle bars 16 feet apart, 1¼ inches high, lying across the bottom, and held in place by cleats on the sides. They are fed with the vanner tailings, by a rough form of classifier. The pulp is received at the middle of this classifier and runs both ways, discharging through thirteen 1-inch holes to the 13 riffle boxes. The latter are cleaned out once in 24 hours, two at a time, by turning off the pulp and turning on wash water for a time to rinse off some of the quartz; then the riffle bars are removed and the concentrates are swept out while the clear water is still running. The concentrates go to the first compartment of the settling tank, which yields 467 pounds of

concentrates in 24 hours (35.8 pounds for each riffle box) assaying $103 per ton.

In Mill 56, below the amalgamated plates are five riffles or catch pits 1 inch wide and 1 inch deep running across the width of the apron. The first consists of the space between two beveled cleats, the other four are sunken riffles or depressions cut in the surface of the planks. They are all filled with mercury and serve to catch any particles of rusty gold that have been at all brightened. Following these are two collecting sluices each 12 feet long, 8 inches wide and 6 inches deep, sloping $\frac{1}{8}$ inch per foot. The riffles consist of 1-inch holes in a

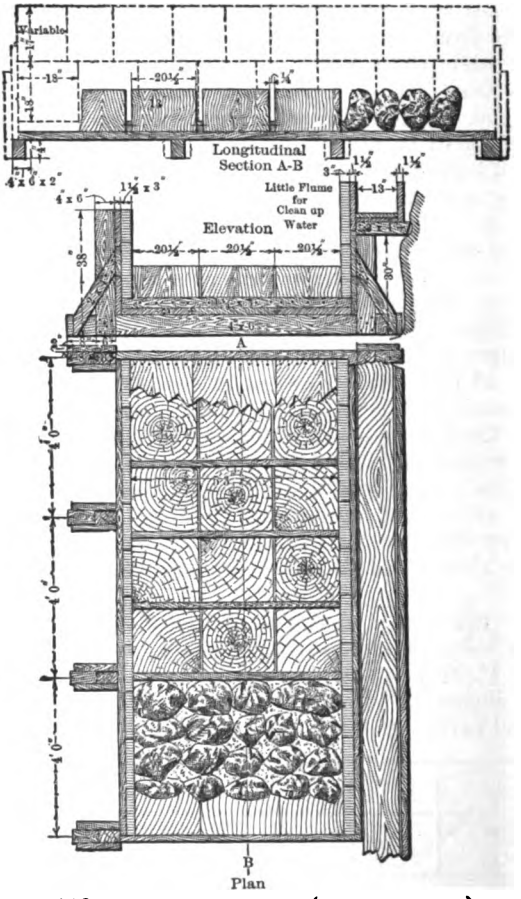

FIG. 419.—RIFFLE SLUICE (FROM BOWIE).

board lying in the bottom of the sluice. The holes are staggered and spaced 3½ inches between centers crosswise and 4½ inches between lines of centers lengthwise. At the lower end are four bar riffles ½ inch wide and 1 inch deep. Following these is the main sluice 200 feet long, 12 inches wide, 12 inches deep, sloping $\frac{9}{10}$ inch in 12 feet, with riffles in it made by placing 2×2×1-inch blocks on edge between 1×1-inch longitudinal strips, as shown in Fig. 420. This construction causes a depositing eddy at the head of each riffle space. The pulp current in this sluice is 3 inches deep. Following this a 15-mesh iron wire screen is placed horizontally in the bottom and yields overflow containing the larger sand and the bulk of the water to tail sluice, and the finer sand to three

tables each 40 feet long, 8 inches wide, sloping ⅜ inch in 1 foot, on which are laid old battery screens. The tail sluice is 12 feet long, 14 inches wide, 8 inches deep, sloping 1½ inches per foot. This is supplied with Hungarian riffle blocks running across the trough (Fig. 421).

The mercury riffles following the amalgamated plates in this mill are skimmed several times a day for rusty gold. The mercury is taken out from time to time and filtered through chamois skin, the amalgam saved and the mercury put back

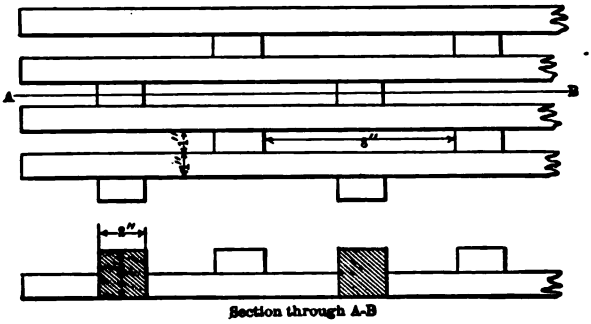

FIG. 420.—RIFFLES IN MILL 56.

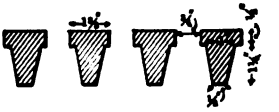

FIG. 421.—HUNGARIAN RIFFLES.

into the riffles. All of the other riffles are cleaned up periodically and yield black sand with rusty gold, which is saved as far as possible by hand pans.

REVOLVING STRAKES.—In Minas Geraes, Brazil, a device for rapidly discharging riffles is used.[4] This consists of a triangular prism with equal faces, each of which is a riffle sluice supplied with cross riffle bars and side retaining walls (see Fig. 422). This prism has end trunnions of hard wood upon which it can

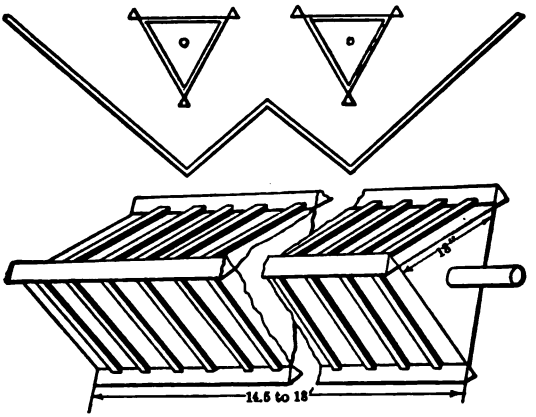

FIG. 422.—REVOLVING RIFFLE STRAKES.

revolve. The pulp current is distributed at the upper end by a wooden sliding (?) bridge, and running over the riffles is discharged at the lower end. When the riffles are charged with auriferous sulphurets they are discharged by revolving the prism to wash off the sulphurets and to bring the next face into line, the pulp being momentarily shut off and the sliding bridge withdrawn. The width of each face is 18 inches, the length 14½ to 18 feet. It slopes 1 inch per foot (4° 45′). The riffle bars are 0.14 inch high, and there are many of them. Two

of these prisms are hung in one tank which is in section like the letter W. This tank, filled with water, washes the riffles and receives the concentrates.

UNDERCURRENTS.—Where it is desired to treat the finer portion of the gravel more quietly than in the main sluice, a small grizzly is placed in the bottom of the sluice and the water and fine gravel passing through this are treated at a gentle speed on "undercurrents," which consist of wide sluices containing riffles. The undercurrent should be eight to ten times the width of the main sluice and have a grade of 4° 30′ to 5° 45′ (8% to 10%).

E. KIEVES.

§ 512. Kieves are strong tubs with sides flaring upward, in which the separation is effected by mechanical agitation in a deep mass of thick pulp. Stirring paddles are used for preliminary mixing, and hammers or heavy striking bars for the final separation. They are used to finish the concentration of fine products that are nearly rich enough to ship. In Mill 46 they deal with grains up to 0.05 inch (1.27 mm.) in diameter, in Mill 47 with grains 0.053 inch (1.36 mm.) in diameter. They can be used on products of the fineness of slime table heads, but with much finer products the process becomes tedious, because of the long time required for settling.

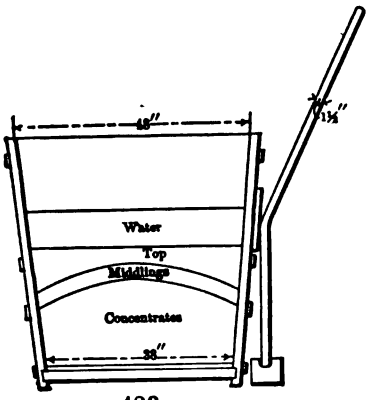

FIG. 423.—KIEVE.

The kieve has a shaft with a crank for revolving it by hand in a movable top bearing, and in a step at the bottom. On the shaft is a pair of paddles of the form of propeller blades, which tend to lift the pulp and stir it thoroughly. The operation is as follows:

Water is run in by a hose up to a mark, found by trial. One or two men revolve the paddle about fifty times per minute, while another shovels in the ore, which is moist. When the required amount is charged, the shaft is kept revolving for a minute or two to thoroughly liquify the pulp. Then the top support and the shaft are quickly lifted out and a bent pounding bar (at Mill 47, 1½ inches diameter, 7 feet long), standing in a wooden step in the floor, is made to deal repeated shocks to the sides of the kieve, perhaps fifty blows per minute. The blows are received upon a plate 14×3×½ inch (Mill 47) screwed to the side of the kieve. The pounding bar is so bent as to strike the kieve a little above the middle. The pounding is kept up until the particles have settled themselves into a compact deposit at the bottom (an almost "hard pan") with the quartz grains largely at the top and the ore grains in layers below. The water is now siphoned off and the layers are skimmed out with a shovel. The layers are roughly as indicated in Fig. 423.

The concentration occurs partly during the stirring, but an important part

TABLE 329*a*.—DETAILS OF KIEVES.

Mill or Author.	Height.	Top Diameter.	Bottom Diameter.	Thickness of			Revolutions of Paddle per Minute.
				Sides.	Bottom.	False Bottom	
	Inches.	Inches.	Inches.	Inches.	Inches.	Inches.	
46	48	48	38				
47	32	44	39	2	2	1	50
Teague[5]	28	41	34				

takes place during the pounding. While the water from below passes upward among the grains, the fine, high specific gravity grains settle below the coarser, lower specific gravity grains, according to a ratio which is probably that of *hindered settling*. Some details of kieves are given in Table 329*a*.

In Cornwall, both the paddles and the pounding bar are sometimes driven by power, as in the kieve described by Teague, the dimensions of which are given in Table 329*a*.

In Mill 47 two kieves are used, fed respectively with the two products of the tye (see § 507), the tye itself being fed with certain of the hutch products of the finishing jigs or with the slime table concentrates. The coarse, poorer portions from the tye, treated in No. 2 kieve, yields: (1) tops, returned to slime table; (2) middlings, re-treated in the same kieve; (3) bottoms, to first treatment in No. 1 kieve. The fine, richer portion from the tye, treated in No. 1 kieve (first treatment), yields: (1) tops, returned to slime table; (2) middlings, returned to same kieve (first treatment); (3) bottoms, returned to same kieve (second treatment). These last bottoms yield, on second treatment: (1) tops, returned to slime table; (2) middlings, returned to same kieve (second treatment); (3) bottoms, barrelled and shipped to smelter. Three men work up one charge in an hour, operating the tye at the same time. In Mill 46, slime table concentrates and hutch products of the finishing jigs are treated in a kieve without first using a tye.

Continuous Kieve.—A deep, cylindrical tub, with the revolving kieve paddles, has been used for treating larger quantities than is possible with an intermittent kieve. It must be fed at a point about half or two-thirds the way up from the bottom to the top by a central hopper and tube. The overflow can be discharged all around the top and caught in a circular launder. The action is less perfect than that of the intermittent kieve, as the hammering is omitted. It probably ranks as a classifier working under hindered settling conditions, and using much less water than any other form. It yields a continuous overflow, and either a continuous spigot product or an intermittent one as desired. The apparatus might serve as the first settling tank in the Austrian graphite mill (§ 784). This is suggested merely to indicate the line of work the author believes the apparatus to be suitable for.

Bibliography of Vanners, Percussion Tables, Film-Sizing Tables, Riffles and Kieves.

1. **Adams, W. J., (1899), "Amalgamation," p. 30. Comparison of side-shake and end-shake vanners.**
2. **Bilharz, O., (1896), "Mech. Aufbereitung," Vol. I., pp. 49 and 105. Descriptions of Bilharz table, Frue vanner, slime table and buddle. Illustrated.**
3*a*. **Callon, J., (1886), "Mining," Vol. III., p. 92. Percussion tables, buddles, slime tables and kieves.**
3*b*. **Davies, E. H., (1894), "Mach. Metal. Mines," pp. 295, 306. Buddles, slime tables, vanners and kieves. Hendy concentrator. Illustrated.**
4. **Ferrand, Paul, (1894), "L'Or á Minas Geraes," Vol. II., p. 60. A self-cleaning riffle sluice. Illustrated.**
5. **Foster, C. Le N., (1894), "Ore and Stone Mining," pp. 570 and 579. Descriptions and details of belt tables, Cornish frames, buddles, percussion tables and kieves. Short statements of methods and principles of operation. Illustrated.**
6. **Gaetzschmann, M. F., (1872), "Aufbereitung," Vol. II., p. 266. Descriptions, details and discussion of slime tables, bumping tables, buddles, etc. Illustrated.**
7. **Kirschner, L., (1899), "Erzaufbereitung," Part II., p. 78. Detailed descriptions of various slime tables, with adjustments, capacities, etc. Illustrated.**
8. **Kunhardt, W. B., (1893), "Ore Dressing," p. 70. Discussion of principles, operation, capacity, etc., of buddles, slime tables, percussion tables, vanners and kieves.**
9. **Linkenbach, C., (1887), "Aufbereitung der Erze," p. 90. Construction, operation, adjustments, capacity, etc., of bumping tables and slime tables. Illustrated.**

10. Rickard, T. A., (1897), "Stamp Milling." Some practical details and results with canvas and blanket tables; also vanners and bumping tables.
11. Rittinger, P. R. von, (1867), "Aufbereitungskunde," p. 359. Theory of Film Sizing. Descriptions, adjustments, capacity, etc., of buddles, percussion tables, slime tables, etc. Methods and apparatus for feeding tables. Illustrated.
12. Sparre, J. von, (1869), "Theorie der Separation," p. 23. Certain experimental deductions as to separation on slime tables.

---

13. *Am. Inst. Min. Eng.*, Vol V., (1876-1877), p. 595. Charles M. Rolker. Details of Evans slime table and of a kieve. Illustrated.
14. *Ibid.*, Vol. VIII., (1879-80), p. 439. H. S. Munroe. Capacity of Evans tables at Lake Superior, and density of the pulp fed.
15. *Ibid.*, Vol. IX., (1880-81), p. 441. Ellis Clark, Jr. Details and comparison of Rittinger and Salzburg tables at Przibram, Bohemia. Also experiments on different surfaces for Rittinger tables.
16. *Ibid.*, Vol. XI., (1882-83), p. 475. Richard P. Rothwell. Construction and cost of Linkenbach tables, with some working results. Illustrated.
17. *Ibid.*, Vol. XII., (1883-84), p. 64. F. G. Coggin. Comparison of Evans and Linkenbach slime tables.
18. *Ibid.*, Vol. XVII., (1888-89), p. 675. H. S. Munroe. Description of Parsons' Rittinger table, with detail drawings.
19. *Ibid.*, Vol. XXI., (1892-93), p. 280. Otto F. Pfordte. Results of a comparative test of plain and corrugated belts of Frue vanners.
20. *Ibid.*, Vol. XXVI, (1896), pp. 602, 632 and following. Charles W. Goodale. Comparative tests on vanners and slime tables; and a test on classification for vanners. Discussion, p. 1108 and following.
21. *Ibid.*, Vol. XXVII., (1897), p. 76. Robert H. Richards. Investigations of the work and adjustments of slime tables.
22. *Ann. des Mines*, Series IV., Vol. XX., (1851), p. 527. J. A. Burdon. Description and operation of Brunton belt concentrator, and of a mechanical kieve.
23. *Ibid.*, Series VI., Vol. XIX., (1871), p. 364. A. Henry. Mathematical theory of Rittinger table. Materials for surface, details of operation and capacity of Rittinger table. Illustrated.
24. *Ibid.*, Series VII., Vol. XIV., (1878), p. 223. Carcanagues. Description and operation of Cornish buddles, frames and kieves. Illustrated.
25. *Ibid.*, Series VIII., Vol. XX., (1891), p. 57. Maurice Bellom. Description and discussion of the Stein belt table, and the Linkenbach slime table. Illustrated.
26. *Berg. u. Hütt. Jahrbuch*, Vol. XXVI., (1878), p. 187. J. Habermann. Details of Salzburg table constructed of iron. Illustrated.
27. *Ibid.*, Vol. XLVI., (1898), p. 413. C. Blömeke. Description, discussion and comparison of various slime tables.
28. *Berg. u. Hütt. Zeit.*, Vol. XXXIX., (1880), p. 2. C. Linkenbach. Details of Linkenbach slime table, with discussion of its advantages. Illustrated.
29. *Ibid.*, Vol. XLIV., (1885), p. 129. J. Kavčič. Mathematical discussion of the action on a Rittinger table.
30. *Ibid.*, Vol. XLIV., (1885), p. 138. Conrad Blömeke. Description and comparison of convex and concave slime tables. P. 145. Discussion of the Rittinger table, its construction, materials for the working surface, and details of management.
31. *Ibid.*, Vol. L., (1891), p. 69. Conrad Blömeke. Description of improved Stein tables, with some working results. Vol. LI., (1892), p. 385. Various modifications of the percussive belt table. The Schranz table. Improved results on Rittinger table by applying wash water from a diagonal spray pipe. Illustrated.
32. *Ibid.*, Vol. LIV., (1895), pp. 223 and 243. Conrad Blömeke. Description and discussion of the Bartsch, Schranz, Luhrig and Linkenbach tables, with results and comparisons.
33. *Ibid.*, Vol. LV., (1896), p. 13. Conrad Blömeke. Comparison of the Kávân-Rittinger with the Luhrig table; with results of tests. P. 209, Comparison of Stein and Bartsch tables.
34. *Berg. und Hüttenwesen des Oberharzes.* Stuttgart, 1895, p. 221. H. Zirkler. Short general discussion of dimensions, capacity, etc., of slime tables in the Harz Mountains.
35. *Bull. Soc. Ind. Min.*, Series III., Vol. IV.. (1890), p. 922. Gayet. Details and some working results of the Castelnau belt table.
36. *Ibid.*, Series III., Vol. VIII., (1894), p. 641. F. Schmidt. Descriptive review of the various belt tables, with discussion. Illustrated.
37. *Can. Min. Rev.*, Vol. XVII., (1898), pp. 43 and 134. F. T. Snyder describes a gyrating vanner, and gives some results.

38. *Engineering*, Vol. LVIII., (1894), p. 777. Editor. Description of the Ferraris belt concentrator, with some details of operations and capacity. Illustrated.
39. *Eng. & Min. Jour.*, Vol. XLII., (1886), p. 159. Frederick G. Corning. Description of the Corning belt concentrator. Illustrated.
40. *Ibid.*, Vol. LIV., (1892), pp. 5, 28 and 52. John W. Meier. Description and comparison of Rittinger and Salzburg tables and rectangular buddles at Przibram; also a comparison of convex slime tables and buddles. P. 367. Description of Stein belt concentrator, with results. Illustrated.
41. *Ibid.*, Vol. LIX, (1895), p. 199. Same as *Engineering*, Vol. LVIII., p. 777.
42. *Ibid.*, Vol. LX., (1895), pp. 29, 441 and 466. W. H. Storms. Details of several canvas table plants.
43. *Ibid.*, Vol. LXII., (1896), p. 297. Editor. Illustrated description of Ellis gyrating vanner.
44. *Ibid.*, Vol. LXVIII., (1899), p. 8. A. H. Wethey. Improved details of Wilfley table. Working results.
45. *Freiberger Jahrb.*, (1893), p. 76. L. Seemann. Some details of adjustment, capacity, etc., of Stein table.
46. *Inst. Civ. Eng.*, Vol. CXVI., (1894), p. 50; also the discussion at end of the paper. Robert E. Commans. Description and discussion of buddles, percussion tables, vanners and circular slime tables.
47. *Judge's Rep. on Centennial Exposition* (Philadelphia, 1876), Vol. III., pp. 228 and 308. E. Althans. Sparre's principles of surface sizing. Discussion of buddles, slime tables and percussion tables.
48. *Mines and Minerals*, Vol. XIX., (1898-99), p. 537. John M. Sweeney discusses the design of riffles, and gives experience.
49. *Min. & Sci. Press*, Vol. LXVI., (1893), p. 161. George K. Fischer describes the Robinson riffle and a modification of the same; and quotes experience with the two. Illustrated.
50. *Ibid.*, Vol. LXXIII., (1896), p. 277. W. S. Hutchinson. Description of Gates' canvas plant, with details and working results. Illustrated.
51. *Oest. Zeit.*, Vol. XXXVI., (1888), p. 531. Carl von Reytt. Details and results of comparative tests of Linkenbach tables, revolving conical tables and buddles.
52. *Ibid.*, Vol. XXXVIII., (1890), p. 217. O. Bilharz. Details of the Bilharz belt table. Illustrated.
53. *Ibid.*, Vol. XLII., (1894), p. 421. E. Ferraris. Description of the Ferraris belt table. Illustrated.
54. *Ibid.*, Vol. XLIII., (1895), p. 91. L. Kirschner. Details and results of Kávân's modified Rittinger table.
55. *Ibid.*, Vol. XLIV., (1896), p. 369. L. Kirschner. Comparative tests of the Kávân-Rittinger and the Luhrig tables.
56. *Raymond's Rep.*, (1873), p. 336. G. F. Deetken describes a power-driven kieve. Illustrated.
57. *Sch. Mines Quart.*, Vol. XV., (1893-94), p. 23. Translation from *Ann. des Mines*, Series VIII., Vol. XX., (1891), p. 57.
58. *Zeit. Berg. Hütt. u. Salinenwesen*, Vol. XXVI., (1878), pp. 122 and 177. Same as *Judge's Rep. on Centennial Exposition* (Philadelphia, 1876), Vol. III., pp. 228 and 308.
59. *Ibid.*, Vol. XLI., (1893), p. 207. Editorial. Description of the Bartsch convex slime table, with some working results. Illustrated.
60. *Ibid.*, Vol. XLIII., (1895), p. 215. Editorial. Some results with the Bartsch convex slime table.
61. *Ibid.*, Vol. XLVII., (1899), p. 239. Hübner. Advantages of revolving concave tables. Comparison of Bartsch and Linkenbach tables.

CHAPTER XVII.

AMALGAMATION.

The properties of mercury, which enable it to form alloys with gold and silver, are made use of in milling for the extraction of those metals from their ores.

§ 513. PROPERTIES OF MERCURY.—Mercury freezes at 39° F. below zero. It vaporizes to a very slight degree at ordinary temperatures, more rapidly at 100° F. and at 212° F. sufficiently to salivate an incautious workman. It boils at 680° F. Its specific gravity is 13.6. Its capillarity is negative except to those metals with which it easily amalgamates. To these, when their surfaces and that of the mercury are clean, it is positive, that is, it "wets" them. It is not affected, when pure, by air, but, when impure, oxidation of the other metals forming the impurities takes place on the surface, and the oxides formed are absorbed by the mercury. Mercury and all its salts are violent poisons. Raw white of egg or potassium iodide is the best antidote. Strong nitric or sulphuric acids attack mercury; hydrochloric acid, dilute sulphuric or pure dilute nitric attack it little or not at all; dilute nitric acid containing nitrous acid readily attacks it however.

§ 514. AMALGAMS.—If a grain of clean metal, for example, gold, comes in contact with clean mercury, according to its thickness the particle becomes either entirely combined or superficially coated with mercury, and if two such particles come in contact with each other they are loosely cemented or soldered together. Such aggregations, which are alloys of the metals with mercury, are called amalgams.

If a metallic compound that can be chemically decomposed by mercury, for example, cerargyrite (chloride of silver) or argentite (sulphide of silver) comes in contact with mercury under conditions favoring the reaction, a portion of the mercury seizes the chlorine or sulphur, forming chloride or sulphide of mercury, and the remainder seizes upon the silver as it is set free, forming an amalgam of mercury and silver.

Mercury unites also readily with copper, lead, tin, cadmium, zinc, bismuth, sodium, potassium and some of the rare metals. The affinity of mercury for the various metals with which it unites to form amalgams, increases with the temperature. In the case of arsenic and antimony, heat is necessary for their amalgams to form, and with that of the latter the antimony gradually separates out again as a black powder on cooling. By using a voltaic couple, with a dilute acid and with mercury as the negative electrode, it unites with nickel, cobalt, manganese, iron, chromium, aluminum and platinum. Mercury forms an amalgam with the above metals when their salts are treated by electrolysis with mercury as the negative electrode. Sodium amalgam will decompose most of the salts of the metals yielding amalgam of mercury and the metal derived from the salt. Mercury forms a triple compound with sulphur and arsenic.

As sodium amalgam is used to some extent in mills its preparation is of special interest. For preparing it, clean, dry mercury is used from which all moisture has been removed by blotting paper. It is heated gently and pieces of sodium, about the size of a pea, are added one at a time, waiting for the reaction after each addition, until an amalgam of the consistency of soft putty is obtained. This amalgam decomposes unless kept dry and out of contact with the air. It keeps best when covered with naphtha and put into tightly stoppered bottles.

In milling, three amalgams of gold may be considered. The first is liquid, which appears like mercury, and is commonly considered to be a saturated solution of solid gold amalgam in mercury. When filtered through chamois skin it contains about 0.1% gold at 60° F. The quantity contained will increase with the temperature. On standing several months, at about 68° F., crystals of amalgam will crystallize from this, leaving a solution with only 0.0683% gold. Even this, when filtered through boxwood, is reduced to 0.0601%, which figure probably represents the amount of gold held in permanent solution at 68° F. The second is solid. The gold in it is combined in some definite chemical proportion with mercury, and has a definite crystalline form. Native amalgam of California ranges from 39.02 to 41.63% gold, corresponding to the symbol $Au_3\ Hg_2$. A number of other solid amalgams have been made but the one just mentioned is probably that made in the mills. The third is nuggets of gold superficially coated and cemented together with the first and second amalgams. By straining mill amalgam through chamois skin, one gets No. 1 amalgam in the liquid which goes through, and a residue, which approximates to No. 2 amalgam, according as No. 1 and No. 3 are absent from it. If No. 1 is present in excess it will soften the amalgam and diminish the per cent. of gold; if No. 3 is present it may greatly increase the per cent. of gold.

Silver amalgams may be divided into three classes in the same way as gold. The solid native silver amalgams vary from $Ag_2\ Hg_3$, containing 26.25% silver, to $Ag_{10}\ Hg_3$, containing 64.2% silver. The presence of unpenetrated silver nuggets in mill amalgam is rare since the amalgam is generally formed by chemical reaction with some compound of silver rather than with native silver.

For further information on gold and silver amalgams, the reader is referred to the very complete treatment given the subject by Louis.[10]

§ 515. Apparatus Used for Amalgamation.—For amalgamation or separating the precious metals from their ores by mercury, the following devices are used:—

Stamp mill.
Arrastra, Huntington or other crushing mills.
Amalgamating pan.
Inside plates, that is, amalgamated plates inside the stamp mortar or other crushing mill.
Outside plates.
Mercury wells and traps.
Mechanical amalgamators which do not combine crushing with amalgamation.

For treating and partially refining the amalgamated products of the preceding apparatus there are the following devices:

Clean up pan.
Clean up barrel.

While both gold and silver are caught by all these, the amalgamating pan is used where silver preponderates in the ore and the others where gold. The first four and the last two combine crushing with amalgamation and have already been described under the various headings. It now remains in this chapter to take up the other three.

Outside Amalgamated Plates.

§ 516. Principle of Action.—These are generally copper plates coated with an amalgam. They are set at an angle so that the pulp fed at the upper end flows down over them by gravity. During its passage the constantly recurring waves

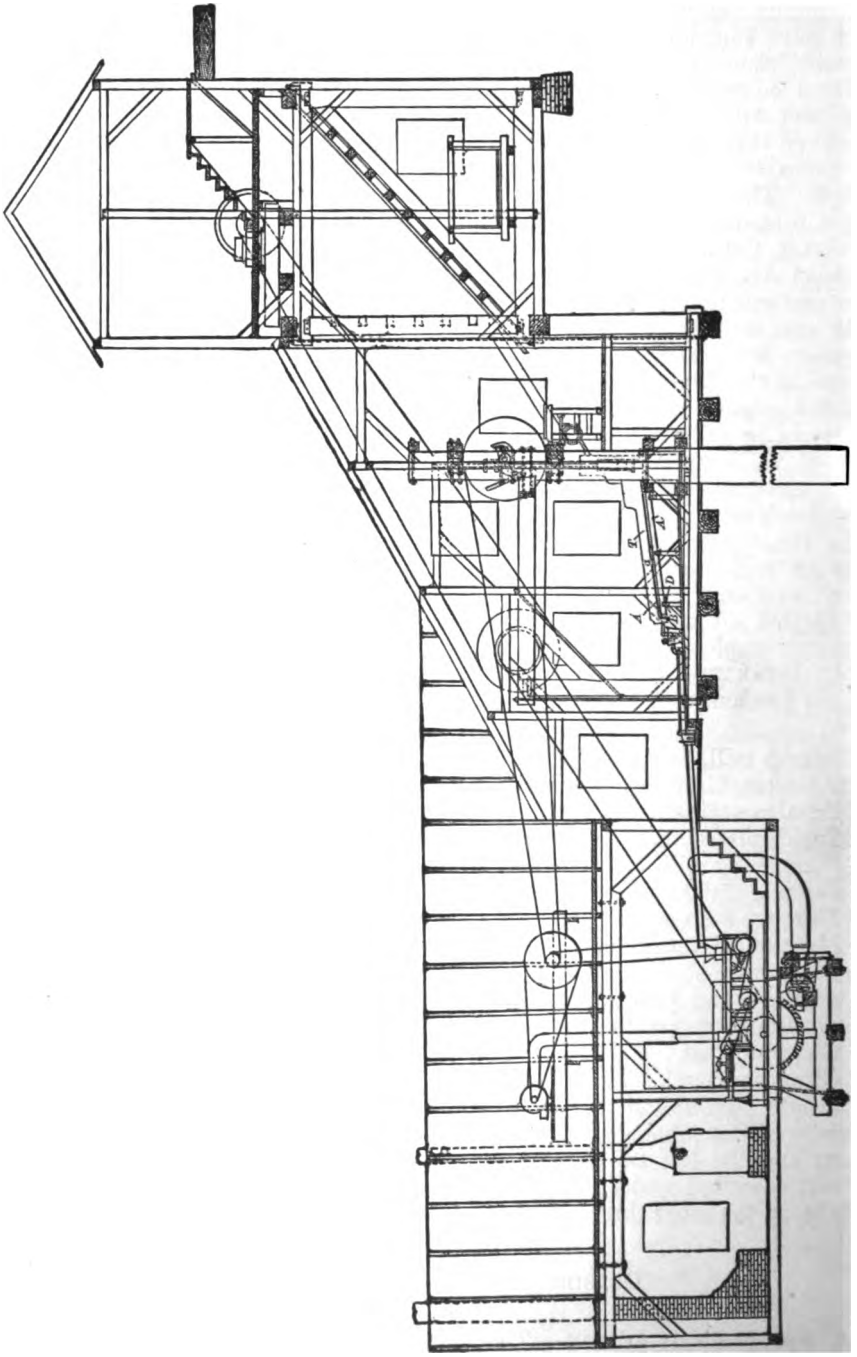

FIG. 424.—SECTION OF THE OLDHAM MILL.

and the drops which the pulp makes upon the head of the plates bring the free gold into contact with the surface so that it becomes amalgamated and adheres firmly to the plate, while the sand and sulphides are carried forward by the water. Mercury has to be supplied from time to time to keep the amalgam on the surface of the right degree of hardness, and it is scraped off and the gold saved at stated intervals.

§ 517. TABLES FOR SUPPORTING PLATES.—These should be so constructed that the slope may be readily adjusted and at the same time be firm and rigid enough to remain constant in any position. This is to prevent any unevenness in the flow of the pulp, and thereby avoid danger of loss which occurs when portions of a plate are alternately wet and dry. A few of the designs used by the mills will be given.

Two tables, standing upon independent sets of legs and with independent adjusting wedges, are used for each battery in Mills 65, 73 and 74, which have two long plates side by side, each 2 feet wide. Before putting on the plates, the tables are dressed down $\frac{1}{16}$ inch in the center for the full length, causing a slight depression in the center of the plate, and, in consequence, the center of the wave to be in advance of its ends. If the tables are not dressed as described but are left flat the pulp will not run so evenly but will tend to one side or the other.

Tables mounted upon wheels running on a track are used in Mill 62. They are wheeled forward a short distance at the time of the clean up. Preston[89] states that in some mills only the upper section of the tables is movable, while the remainder is stationary.

At Mill 67, which is similar to the Oldham mill, (see Fig. 424), the plates are laid upon tables made of the best selected clear pine 2 inches thick with three cleats, 3×6 inches, fastened underneath, one at each end and one in the middle. There are three transverse rods of ¼-inch round iron passing through the planks and holding them tightly together. These tables rest upon two stringers of 3×5-inch scantling and are kept from sliding downward by a cleat nailed to the stringer. These stringers lie loose in notches or gains cut in standards and a hard-wood pin keeps each stringer from sliding downward but admits of sufficient freedom to raise the lower end as required. The standards are nailed to the floor and have no connection with the mortar blocks, nor has the floor, a coarse saw-cut separating the boards of the floor from the blocks. At the lower standard a hard-wood wedge is inserted under each stringer which wedge has a slot cut in the middle, through which a bolt with a thumb nut is run. The slope is adjusted by this wedge and kept in any position by means of the thumb nut.

Mill 64 (see Figs. 425*a* and 425*b*) has tables built of 2-inch planks in steps, causing drops from one plate to the next. In a total length of plate of 23 feet 9 inches, there is one drop from the mortar, two from mercury traps and five drops of 2 inches each from steps in the plank table. The sides are of 1½-inch plank, varying from 3½ to 5½ inches in height. The various sections are made overlapping and there are cross bars at each joint. The under side of the table is only 17 inches above the floor at the head and 6 inches at the foot, and it rests upon five cross timbers spaced at various intervals, which are supported by short posts.

At Mills 68 and 82 the tables for the plates are made of good clear lumber. The sides are made of 2-inch stuff. The bottom is tight, consisting of cross boards 1½ inch thick, which are mortised to the sides and further held by three ¼-inch transverse rods of iron. In addition to this, in order to hold the bottom in shape and prevent warping, three longitudinal 6-inch strips are fastened to the bottom by dovetailing. These strips also answer the purpose of saving the table when wedging it, that is, wedges used at the head or foot are always

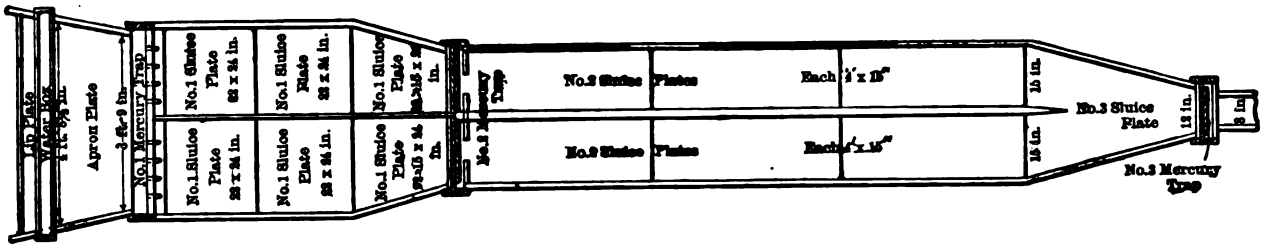
Lip Plate
Water Box
Apron Plate
No.1 Mercury Trap
No.1 Sluice Plate 22 x 24 in.
No.1 Sluice Plate 22 x 24 in.
No.1 Sluice Plate 22 x 24 in.
No.1 Sluice Plate 22 x 24 in.
No.1 Sluice Plate 22 x 24 in.
No.1 Sluice Plate 22 x 24 in.
No.2 Mercury Trap
No.2 Sluice Plates
No.2 Sluice Plates
15 in.
15 in.
No.3 Sluice Plate
13 in.
No.3 Mercury Trap

FIG. 425*a*.—PLAN OF PLATES AT MILL 64.

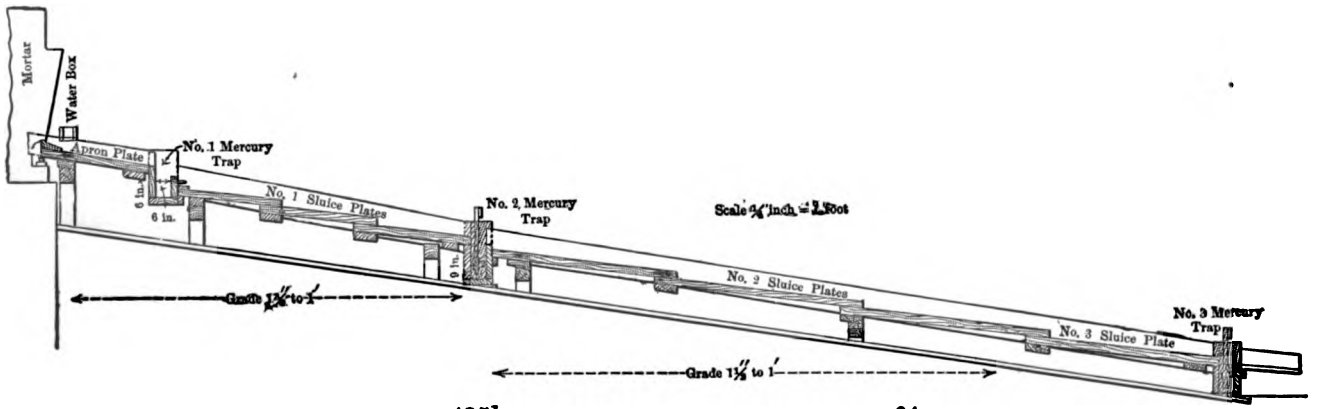

FIG 425*b*.—ELEVATION OF PLATES AT MILL 64.

placed so as to bear against these strips. The table is well painted and put together with screws. The plate is simply laid upon the table, fitting in a groove on either side, about room enough being allowed for a sliding fit. The sides of the table, just above the plate, are caulked with oakum and two cleats fastened on, one on each side. The cleats rest solid on the plate and are made wedge-shaped, tapering from 3¼ inches at the bottom to nothing at the top and extending the whole height of the side, which is 6 inches. The upper end of the table extends back about 2 inches under the mortar lip and it is wedged tight, the wedges being driven from under the table, forcing it up against the mortar lip. The lower end of the table is supported upon a strong wooden sawhorse, which is securely fastened to the floor. Wedges on top of this horse serve for leveling the table and adjusting the slope.

In Mill 86 the table is hung on stirrups, to be adjustable for different ores (see Fig. 426). Louis[10] finds that the upper ends of tables are sometimes hung on rods, independent of the floor and of the stamp mill, to prevent jarring.

John Hays Hammond[40] recommends cast iron tables for supporting the amalgamated plate. A table of this kind, used in Mill 57 for the newer plates, is shown in Fig. 427.

In regard to the advisability of connecting the table with the mortar or the stamp frame, opinions differ. The advocates for connection are Rickard[13], Mills 68 and 82, and the Haile Gold Mine.[27] The claim is that the jar obtained assists the settling of the gold and is beneficial to amalgamation. The opponents are Hammond and Preston of California, Furman of Colorado, Hardman of Nova Scotia, and Louis, all of whom claim that the jar is injuri-

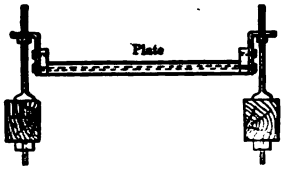

FIG. 426.—STIRRUPS AT MILL 86.

FIG. 428.—FASTENER AT MILL 67.

ous, probably tending to form hard amalgam. At the trial of a large steam stamp at Mill 66, (see § 122), the jar was enough to cause amalgam to ball up on the plates and mercury to exude and run away. The weight of the evidence appears to be against the use of vibration on plates.

Extending across the head of the table over the plate, there is generally a foot board on which the attendant may walk or stand in looking after the mortar.

§ 518. FASTENING THE PLATES TO THE TABLES.—Plates as they come to the mill are rarely over 8 or 10 feet long, so that in almost all of the mills the amalgamated plates are made up of sections, which are laid either overlapping or with butt joints. In the latter case they are sometimes brazed together in one sheet. The method of fastening down the plates at Mills 68 and 82 has already been given. Mill 67 fastens the lower edge of the plate by a lapping iron strip, (see Fig. 428).

At Mills 65, 69, 73 and 74 blankets are placed between the plates and the tables. The sections are laid with butt joints. On each side of a joint is a row of screws fastening the plates to the table, and there are also cleats at the sides. Copper screws are best for this work, being of the same character as the plates; brass becomes brittle, while iron causes galvanic action which enlarges the holes. Several authorities advise not using screws at all, but to have the sections of the plate overlap and fasten them down by buttons or wedges at the sides so that they are easily removable.

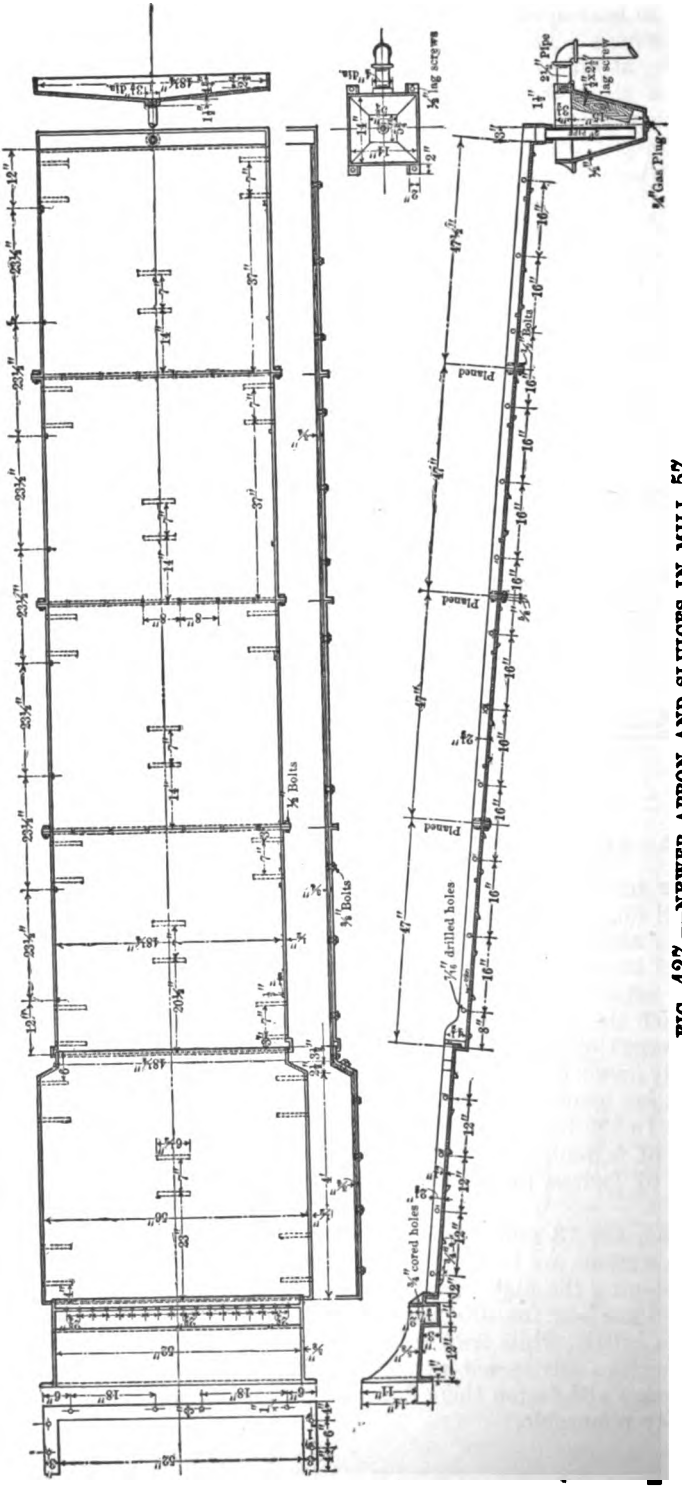

FIG. 427.—NEWER APRON AND SLUICES IN MILL 57.

§ 519. POSITION OF PLATES IN THE MILLS.—In American mills outside plates are almost universally placed just following stamps or other fine crushing apparatus, and preceding concentrators. Mill 86 formerly used plates after vanner and Gilpin County bumping table, but they are now given up, having been found useless. In Australian mills there is considerable variation in the position of the outside plates, as may be seen by reference to Rickard.[13] In the majority of cases, however, they follow directly after stamps.

TABLE 330.—AMALGAMATED PLATES.

Abbreviations.—Ft.=feet; In.=inches; No.=number; par.=parallel; Sq.=square.

Mill Number.	Location of Plate.	Kind of Plate.	Length Ft.	Length In.	Width. Inches.	Thickness. Inches.	Area of Plate. Sq. Ft.	Slope. Inches per Foot.	Slope. Degrees.	Slope. Minutes.	Water Passing Over Plate per Minute. Gallons.	Height from which Pulp Drops on Plate. Inches.
a 56	On splash board	Silver plated...	1	2	52	1/8	5.06	2	9	28	.....	(b)
	On mortar lip	" ...	0	3	52	1/2	1.08	1/8	2	23	8.36 each	2 1/4
	Apron plate	" ...	0	10	52	1/8	3.61	1	4	46	8.36 each	2 1/2
	Next follow riffles containing mercury.											
57	On mortar lip	Silver plated...	1	6	52	.....	6.50	1 1/8	7	8	10	7
	Next follows No. 1 mercury trap											
	Apron plate	Silver plated...	4	0	56	.....	18.66	1 1/4	7	8	10	2 1/4
	Sluice plate (c)	" ...	15	9	48	1/8	63.00	1 1/8	7	8	10	2 1/2
	First sluice plate (d)	" ...	12	0	24	1/8	24.00	1 1/4	5	57	10	2 1/2
	Second sluice plate (d)	" ...	12	0	48	1/8	48.00	1 1/16	5	4	10	.....
	Next follow No. 2 mercury traps on six batteries and Nos. 2 and 3 mercury traps on two batteries.											
58	First apron plate	Silver plated...	1	6	54	1/8	6.75	1.8	8	40	23.5	5
	Next follows No. 1 mercury trap.											
	Second apron plate	Silver plated...	4	0	54	1/8	18.00	1 1/16	7	25	23.5	2 1/8
	Next follows No. 2 mercury trap.											
	Sluice plate	Silver plated...	12	0	(e) 46 (e) 29	1/8 1/8	46.00 29.00	1 11/16 1.6	8 7	0 35	23.5	.....
	Next follows No. 3 mercury trap.											
	On vanner distributors	.....	1	0	42	.....	3.50	.....	...	....	.....	.....
59	First apron plate	.....	1	9	50	.....	7.29	2	9	28	20	2
	Next follows No. 1 mercury trap.											
	Second apron plate	.....	4	4	(f) 56	.....	20.22	1 1/8	7	8	20	5
	Sluice plate	.....	12	8	(g) 24	.....	25.33	1	4	46	20	.....
	Next follows No. 2 mercury trap.											
60	Apron plate	Silver plated...	16	0	48	.....	64.00	1 1/8	7	8	15	.....
	Next follows No. 1 mercury trap.											
61	On splash board	Silver plated...	0	10	52	1/8	3.61	.....	.....	.....	.....	.....
	Apron plate	" ...	16	0	52	1/8	69.33	1 1/4	8	0	18	.....
	Sluice plate	" ...	8	0	20	1/8	19.33	1.6	7	30	18	.....
62	On splash board	" ...	0	8	56	.....	3.11	.....	50	0	.....	(b)
	On mortar lip	" ...	0	4 1/16	56	.....	1.75	2 1/4	10	37	10	2
	On distributor	" ...	0	8	56	.....	3.11	4	18	26	10	1 1/4
	Next follows No. 1 mercury trap.											
	On back deflector (h)	Silver plated...	0	5	56	.....	1.94	12	45	0	10	1/8
	Apron plate	" ...	9	(i) 0	56	.....	28.00	2 1/4	10	37	10	.....
	Next follows No. 2 mercury trap. The vanners have No. 3 mercury traps on their distributors.											
63	On mortar lip	.....	.....		.....	.....	.....	.....	.....	.....	.....	2
	No. 1 mercury trap between lip and apron plates.											
	Apron plate	.....	15	0	(u) 52	.....	65.00	2 1/16	10	0	.....	1
64	On mortar lip	.....	0	5	48	.....	1.66	.....	.....	.....	15	4-7
	Apron plate	.....	2	0	56 1/2-45	.....	8.46	1 3/4	8	18	15	1
	Next follows No. 1 mercury trap.											
	No. 1 sluice plates (j)	.....	6	0	Each 22	.....	20.84	1 3/4	8	18	Each 7.5	1
	Next follows No. 2 mercury trap.											
	No. 2 sluice plates (k)	.....	12	0	Each 15	.....	30.00	1 1/8	7	8	Each 7.5	1
	No. 3 sluice plate	.....	3	8	30-12	.....	6.42	1 1/2	7	8	15	1 1/4
	Next follows No. 3 mercury trap.											
65	Apron plate	Silver plated...	0	11	(u) 48	1/8	3.67	.....	.....	.....	.....	0
	Next comes a distributor with two spouts, one for each sluice plate, and the pulp then passes over two back deflectors with plates on them.											

TABLE 330.—AMALGAMATED PLATES.—*Continued.*

Mill Number.	Location of Plate.	Kind of Plate.	Length Ft.	Length In.	Width. Inches.	Thickness. Inches.	Area of Plate. Sq. Ft.	Slope. Inches per Foot.	Slope. Degrees.	Slope. Minutes.	Water Passing Over Plate per Minute. Gallons.	Height from which Pulp Drops on Plate. Inches.
65	Two parallel sluice plates.	Silver plated...	21	0	Each 24	1/8	84.00	1¾	8	25	.....	¼
	Next follows No. 1 mercury trap. There are plates after the clean up barrel similar to Mill 73.											
66	Apron plate.....	Plain copper...	10	0	54	3/16	45.00	2	9	28	16.25	.....
	Copper-lined trough.....	.....	.....		.....	.....	.....	.....	.....		16.25	.....
	Next follows No. 1 mercury trap, lined with copper.											
	Sluice plate.....	.....	8-10	0	18	1/8	13.25	1	4	46	16.25	.....
	Next follows No. 2 mercury trap.											
67	(l)	Plain copper...	0	8	52	1/8	2.89	¾	3	35	38	.....
	(m)	" ...	.....		54	1/8	3.96	.....	(m)		38	¾
	Apron plate (n).....	" ...	10	0	54	1/8	45.00	1¾	8	18	38	1
	Next follow Nos. 1 and 2 mercury traps and in the tail launder is No. 3 trap.											
68	On mortar lip.....	Silver plated...	0	6½	52	1/8	2.35	.....	.....		10	2-4
	Apron plate.....	" ...	8	0	52	1/8	34.67	2⅛	11	46	10	2
	Copper-lined launder.....	.....	.....		.....	.....	.....	.....	.....		10	.....
	On vanner distributors....	.....	1	4	48	.....	5.33	.....	.....		.....	.....
70	Apron plates.....	Silver plated...	8	0	52	1/8	34.67	2	9	20	.....	.....
	Next follows No. 1 mercury trap.											
71	On splash board.....	Silver plated...	.....		.....	.....	.....	.....	.....		.....	(b)
	On mortar lip	" ...	0	7½	48	.....	2.50	.....	.....		.....	(o)
	Apron plate.....	" ...	2	5	46	.....	9.26	1.3	5	45	15	1¼
	Next follows No. 1 mercury trap and two steps covered with rubber, the later one of which has No. 2 mercury trap in it.											
	Two par. No. 1 sluice plates	Silver plated...	10	0	Each 15	.....	25.00	1.6	7	30	Each 7.5	⅜
	No. 2 sluice plate.....	" ...	8	0	20⅛	.....	13.67	1.6	7	30	15	0
	Next follows No. 3 mercury trap and before the vanners are No. 4 traps.											
72	On mortar lip	Plain copper...	.....		.....	.....	.....	.....	.....		16.25	(p) 3 & 5
	Next follows a collector, a pipe, and No. 1 and No. 2 mercury traps.											
	Apron plate.....	Plain copper...	10	0	48	1/8	40.00	1.3	6	10	16.25	(q)
	Next follow Nos. 3, 4 and 5 mercury traps.											
	(r)	.....	4	0	12	.....	4.00	.....	.....		.....	.....
	(s)	.....	2	6	12	.....	2.50	.....	.....		.....	.....
	There are Nos. 6, 7 and 8 mercury traps in the tail launder of the mill.											
73	On mortar lip.....	Wooden board.	1	0	.....	1	.....	.....	.....		.....	9
	Then follows a distributor with two spouts, one for each apron plate, and the pulp next passes over two back deflectors, with plates on them 5 inches long.											
	Two par. No. 1 sluice plates.	Silver plated...	22	0	Each 24	1/8	88.00	2	9	28	.....	1
	Next follows No. 1 and No. 2 mercury traps.											
	No. 2 sluice plate.....	Silver plated...	8	0	12	1/8	8.00	2	9	28	.....	.....
	On vanner distributors....	.....	1	6	48	.....	6.00	.....	.....		.....	.....
	(r)	Silver plated...	12	0	12	.....	12.00	1½	7	8	.....	.....
	(s)	" ...	15	0	12	.....	15.00	1½	7	8	.....	.....
74	(t)	" ...	(u) 0	6	(u) 48	.....	2.00	.....	(t)		.....	7
	On mortar lip.....	Wooden board.	(u) 1	0	(u) 48	.....	4.00	.....	.....		.....	1
	Next follows a distributor with two spouts, one for each apron plate, and the pulp next passes over two back deflectors with plates on them.											
	Two parallel sluice plates..	Silver plated...	21	6	Each 24	1/8	86.00	2	9	15	.....	.....
	Next comes a transverse collector, and there is No. 1 mercury trap before the vanners. There are plates on the vanners and after the clean up barrel, similar to Mill 73.											
75	Apron plate.....	.....	2	3	56	.....	10.50	2	9	15	10	.....
	Sluice plate.....	.....	16	0	14⅛	.....	19.33	1⅛	7	10	10	.....
	Next follows No. 1 mercury trap.											
76	On splash board.....	.....	0	8	52	.....	2.89	12	45	0	.....	.....
	On mortar lip.....	.....	0	5	52	.....	1.81	.....	.....		.....	.....
	Next follows a back deflector of wood.											
	First apron plate.....	.....	3	0	52	.....	13.00	2¼	10	37	.....	⅛
	Next follows No. 1 mercury trap.											
	Second apron plate.....	.....	0	5	52	.....	1.81	.....	.....		.....	.....
	Next follows a back deflector of wood.											

TABLE 330.—AMALGAMATED PLATES.—*Concluded.*

Mill Number.	Location of Plate.	Kind of Plate.	Length Ft.	Length In.	Width. Inches.	Thickness. Inches.	Area of Plate. Sq. Ft.	Slope. Inches per Foot.	Slope. Degrees.	Slope. Minutes.	Water Passing Over Plate per Minute. Gallons.	Height from which Pulp Drops on Plate. Inches.
	Third apron plate.....	.....	8	0	56	.....	37.33	2	9	28	.....	⅛
77	Apron plate.....	Plain copper...	12	0	48	⅛	48.00	1¾	8	18	10	.....
	On bed of No. 1 bump table.	" ...	.....		.....	.....	.....	.....	.....	.....	.....	.....
	Next follows No. 1 mercury trap.											
83	Apron plates.....	Silver plated...	(v)8	0	50	⅛	33.33	2	9	28	10	.....
	On vanner distributors....	" ...	1	4	48	⅛	5.33	.....	.....	.....	.....	.....
84	First comes a distributor.											
	Apron plate.....	Silver plated...	(v)8	0	54	.....	36.00	1¾	8	18	.....	.....
85	Next follows No. 1 mercury trap.											
	Apron plate.....	Silver plated...	8	0	52	⅛	34.67	2	9	20	.....	.....
	Next follows No. 1 mercury trap.											
86	After No. 5 trommel	Silver plated...	(w)12	0	48	⅛	48.00	2	9	28	.....	.....
	Next follows No. 1 mercury trap.											
87	Apron plates	Silver plated...	.....		.....	.....	.....	.....	.....	.....	.....	.....
88	Apron plates	" ...	8	0	54	.....	36.00	2¼	10	35	.....	.....
	Next follows No. 1 mercury trap, and on two batteries No. 2 trap.											

(*a*) This mill has double discharge and plates in the front and rear of the mortar. (*b*) Splash from screen. (*c*) This is the only plate after the apron plate in two batteries. (*d*) These two plates follow the apron plate in six batteries. (*e*) 46 inches on four batteries, 29 inches on four batteries. (*f*) This is narrowed to 24 inches at the end. (*g*) This is narrowed to 12 inches at the end. (*h*) These plates are divided lengthwise down the center and rest in two boxes, which are removable and are taken up when the plates are cleaned. (*i*) Made in three sections. The last section is Brussels carpet. A strip of wood is laid down the center. (*j*) These are two parallel plates, each in three divisions, the last one of which narrows to 15 inches (see Fig 425*a*). (*k*) These are two parallel plates, each in three divisions (see Fig. 425*a*). (*l*) This is between the screen and the mortar lip (see Fig. 429). (*m*) This is a back-deflecting quadrant plate, being a quadrant of a cylinder with 6-inch radius (see Fig. 429). (*n*) The upper end of the apron plate is turned up one inch under the mortar lip, but does not come in contact with it. (*o*) 7½ inches from screen; 1¾ inches from splash board. (*p*) Seven batteries have 8-inch drop and one has 5-inch drop. (*q*) 0 at the start; ⅛ inch at middle. (*r*) First plate after clean up barrel. (*s*) Second plate after clean up barrel. (*t*) This is between the screen and mortar lip and is a curved convex plate in the form of a quadrant of a cylinder. (*u*) Approximately. (*v*) Divided into two sections of 4 feet each. (*w*) Divided into two sections.

The location of outside plates, together with their dimensions, and the points at which they are interrupted, is shown in Table 330. For the corresponding inside plates the reader is referred to § 161, and for the traps to § 546 *et seq.* With a few exceptions they all come under one of the following heads:

(*a*) Splash plates or plates on the splash board.
(*b*) Lip plates or plates on the mortar lips or mortar aprons.
(*c*) Apron plates or the wide plates that are disconnected with the mortar.
(*d*) Sluice plates which are narrow plates usually following the apron plates.
(*e*) Shaking plates including plates on the vanner distributors.

Splash plates were found in only five out of 27 mills. The catching of gold, especially if fine, on them, is favored by the fact that the pulp impinges upon them. Their width is such as to extend across the mortar. Their length, however, is short, only from 8 to 14 inches. According to Adams[1], the importance of a splash plate as a gold catcher is underestimated. He recommends that it be supported upon the table and not on the mortar; that the slope be over 45°; that the bottom be at least an inch below the bottom of the screen and the space at the bottom between it and the screen frame be not over ¾ inch in order that it shall receive all the splash.

Lip plates were found in 12 out of 27 mills. It is on these that the greater part of the pulp falls from the screen, and consequently more gold is caught here than on an equal length of any of the following plates. Their length is necessarily short, 3 to 18 inches, while their width is the length of the mortar. In Mill 74 it will be noticed that the pulp from the screen, before it reaches the lip, first falls over a plate about 6 inches long bent in the form of a quadrant

of a cylinder with its convex side up. In Mill 67 the mortar lip is so low that the plate is 2 inches below the lower edge of the screen frame being fastened to the chuck block by two bands of iron (see Fig. 429).

Apron Plates.—The term apron plates, as used by the author, will include those plates which come next to the mortar and are of a width about equal to the length of the mortar; also all subsequent plates which are no narrower than the first apron plate. Apron plates occur in all the mills except 73 and 74. Their length varies from 10 inches in Mill 56 to 16 feet in Mills 60 and 61, and their width from 46 inches in Mill 71 to 56½ inches in Mill 64. In some mills they are narrowed at their lower end to the width of the sluice plates.

Sluice Plates.—There is a looseness in the use of the terms apron plate and sluice plate, but, as used by the author in conformity with the custom in a majority of the mills, sluice plates are those that are narrower than the length of the mortar, or than the plates preceding. Sluice plates were found in 11 out of 27 mills. Their length varies from 3 feet 8 inches in Mill 64 to 22 feet in Mill 73. The width varies from 12 inches in Mill 73 to 48 inches in Mill 57. In Mills 64, 65, 71, 73 and 74, there are two sluice plates side by side, which are equivalent to one wide plate. They enable the attendant to run the whole pulp over one while the other undergoes the daily dressing and cleaning.

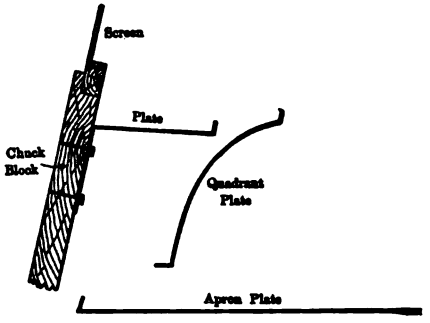

FIG. 429.—FIRST PLATES OF MILL 67.

As sluice plates narrow the stream of pulp, they are now generally condemned by the authorities. The mills using them are in the minority and the tendency is to do away with them. Mill 60 is a new mill, and has no sluice plates. Mill 57 has put in a new arrangement on two batteries, namely a very wide sluice plate after the apron plate; the old arrangement, still used on six batteries, is two sluice plates in series, the first of which is narrow while the second is wide. The first arrangement does better work, even though its total plate area is slightly less than that of the second.

According to Rickard, it is best to have all the plates, from beginning to end, of the same width, which width should be slightly greater than the length of the screen discharge. If much wider, it is difficult to get good distribution. If narrower, the current becomes deeper and swifter, more eddies are formed, and the wave effect is somewhat broken; all of which have the ultimate effect that the catching of gold is hindered. The arrangement used in Mill 76 (Table 330) appears to the author to be very satisfactory.

Shaking Plates.—The old scheme of using plates mounted on a shaking table was found only at the Mayflower mill in Colorado which used shaking amalgamated copper riffle plates supplied with an electric current. Shaking plates 10 feet long and 48 inches wide were formerly used at Mill 57, where they were said to save $50.00 per day, after the sluice plates, but were given up, the idea being that probably what they saved would be caught by the vanner. What are in effect shaking plates are made by putting plates on the distributors of the vanners. This was observed in 5 out of 27 mills of Table 330. Experience shows that shaking plates will save some gold and amalgam which has passed the stationary plates, the amount depending upon the ore and the manner in which it is treated. This is due not only to the settling of the gold directly

by the shaking motion, but also to the diminished slope which is used. They are mounted on suspended or movable frames, and may have either a side or an end shake. For the former, McDermott & Duffield[11] recommend 180 to 200 throws per minute of 1 inch each; for the latter, Preston[39] gives 200 throws per minute of $\frac{3}{8}$ inch. Snyder[44] recommends gyrating plates as giving better contact than either side or end shaking plates. Such plates were formerly used by the Ottawa Gold Mining and Milling Co., at Keewatin, Ontario, but were given up on account of frequent breaks and unsatisfactory results.

Mill 77 uses a thin amalgamated copper plate on the surface of No. 1 bumping table. This is cleaned every two months and yields 1 ounce of amalgam with a much higher proportion of silver to gold than the average of the mill. This copper plate lasts only one or two years, but will more than pay for its renewal when worn out, by its gold and silver value.

Miscellaneous Plates.— There are a few plates in the mills which are not included in the five preceding classes. Plates are used in several mills after the clean up barrel, among which are 65, 72, 73 and 74; in Mill 66 as lining for the No. 1 mercury trap; in Mills 66 and 68 as lining for launders; in Mill 67 as a curved quadrant plate (see Fig. 429), the first object of which is to distribute the pulp on the apron, but it is a saver of gold and mercury to a considerable extent; in Mills 62, 65, 73 and 74 on back deflectors. This use of back de-

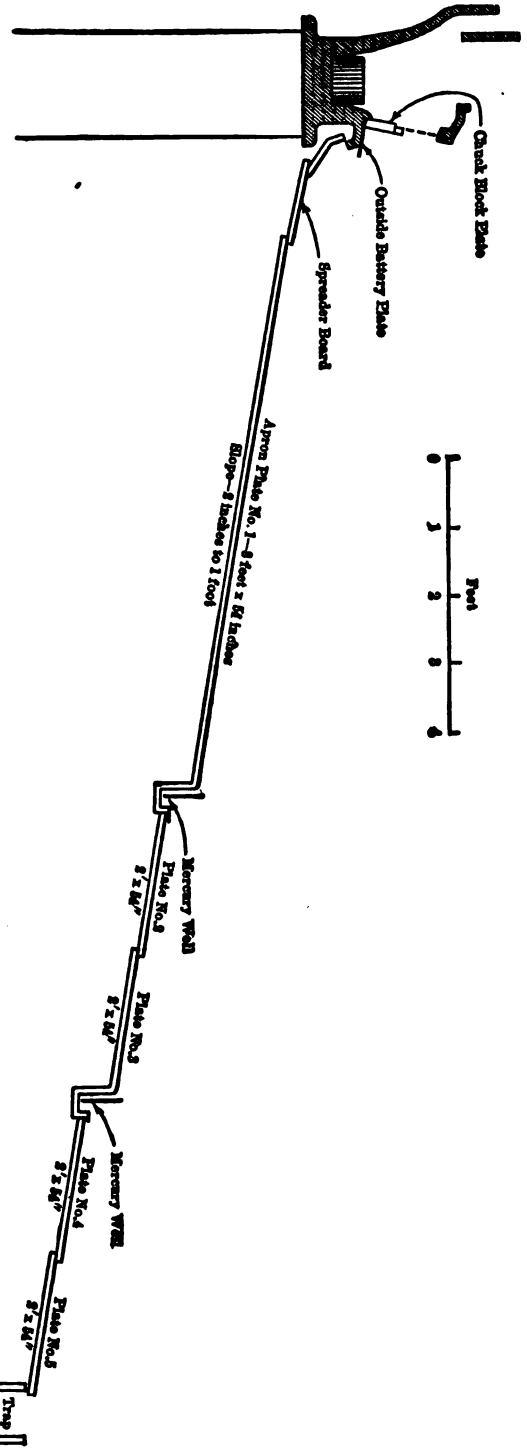

FIG. 430.—ARRANGEMENT OF PLATES AT THE CROSS MILL, GUNNISON COUNTY, COLORADO.

flectors, with plates on them, shown also in Fig. 431*a*, shortens up the length of the table and makes the plates compact, but it lacks simplicity.

Swinging plates in sluices have been used to catch float gold. They are curved pieces of amalgamated plate extending the full width of the sluice and suspended from above so as to be partially submerged, with the concave side toward the coming stream.

§ 520. ARRANGEMENT OF PLATES.—The arrangement of the plates with the distributors and traps varies greatly in the mills, from a simple arrangement consisting of a large apron plate followed by a mercury trap, in Mills 60, 70, 84, 85, 87 and 88, to the more complicated arrangements, such as Mill 62, which has five separate plates with mercury traps and back deflectors interspersed. The arrangement in Mill 67 has already been shown in Fig. 429, that of Mill 64 in Figs. 425*a* and 425*b*, and that of Mill 57 for the new scheme, in Fig. 427. An arrange-

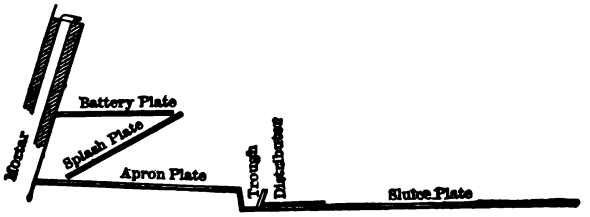

FIG. 431*a*.—ELEVATION OF PLATES IN THE GOVER MILL.

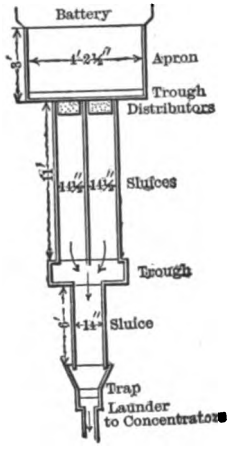

FIG. 431*b*.—PLAN.

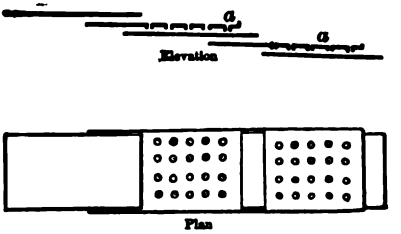

FIG. 432.—CLAYTON'S SCHEME OF DROPS.

ment used in the Cross mill, Colorado, with a Tremain steam stamp, is shown in Fig. 430, and another of the Gover mill, California, in Figs. 431*a* and 431*b*. Australian mills, as a rule, have their plates considerably broken up by mercury wells and traps.

One large plate, like that in the six mills cited above, has the advantage that it is easily cared for, but it lacks a very important aid to the catching of amalgam, viz.: the use of steps or drops along the line of plates so that the pulp falls upon the head of a plate from a height of not over 2½ inches. These cause many of the particles of float gold to come into contact with the surface of the plate and be saved. They also serve an additional purpose to that of simply catching amalgam, inasmuch as they act as very efficient distributors for the pulp, so that the motion of the pulp is that of regularly recurring waves which help and assist amalgamation by rolling over the sands. This breaking up of apron plates and

sluice plates into overlappping sections also allows them, in many cases, to be easily removed and interchanged, which makes it easier to keep the whole line of plates in good condition.

The amount of the drop is very important; if too much, the falling sand very soon scours away the amalgam on the plate, exposing the red copper and completely undoing the work which the drop was intended to perform. When the drop is right, however, the amalgam will build up under the stream more than at any other place. As shown in Table 330, the height of fall exceeds 2½ inches only in a few instances, and the average is not far from 2 inches. In Mill 72, on seven batteries where the pulp fell 8 inches upon the lip plate it had cut holes entirely through the copper, while on one battery, where the drop was only 5 inches, the cutting did not occur. Mill 76 has studied this question and advocates that pulp be never run over 3 feet, or, better, 2 feet, without allowing it to drop. In this mill, where the pulp drops ½ inch from the lip to the apron plate, the amalgam builds up ten times as much as anywhere else.

A scheme of drops favored by Mr. J. E. Clayton[20], is to drop the pulp upon the plates through sheet iron distributors *a* punched with ¼-inch holes with the buhr left on (see Fig. 432). He found that if the fall was too great, the streams cut holes, and if too small it built stalagmites. He preferred 1½ inches drop. He recommends short plates, as the main catch takes place under the distributor. Under ordinary conditions, three short plates were sufficient, but where the gold is fine and difficult to amalgamate the number may be increased.

Louis Janin, Jr.,* holds that the use of drops is unnecessary, and that it is better to employ a straight run of plates of large area which will effect as high a saving as with the use of drops.

§ 521. DISTRIBUTORS AND COLLECTORS.—The distributors and collectors used in the arrangement of plates merit a little attention. As their name implies, the distributors serve first to distribute the pulp evenly over the plates. They may also serve, second, as a means of cutting out one side of a plate in mills where double plates are used; and, third, as a mercury trap.

The distributing arrangement in Mill 71 is quite elaborate. The pulp from the apron plate passes through No. 1 mercury trap and then over two steps. These steps are 1¾ and 3¾ inches high respectively, and are covered with rubber. It then passes over No. 2 mercury trap and over an inclined surface one inch long to the sluice plates.

In Mill 72 a transverse collecting launder follows the lip plate. The pulp then passes through a 2½-inch pipe, on the end of which is a T, both branches of which deliver into No. 1 mercury trap. This pipe arrangement gives free access to the front of the mortar for cleaning up.

Mills 65, 73 and 74 have a transverse trough at the end of the lip plate. The trough has two holes about 3 inches diameter in it, each a quarter of the distance from either end. Each half of the trough drains toward its hole. When it is desired to clean one side of the No. 1 sluice plates, one hole is plugged and the pulp all passes out of the other. Each spout delivers over a back deflecting plate, about 5 inches long to the head of the No. 1 sluice plates. The trough is 11 inches wide in Mill 73, and 6 inches wide and 6 inches deep in Mill 65. Mill 84 has a distributor before its plates, which consists of a transverse trough 48 inches long 12 inches wide, with 24 holes ½ inch diameter in its front side 1 inch above the bottom.

Distributors, which also serve as mercury traps, are described under that head. See § 546 *et seq.*

The use of plate distributors is shown in Figs. 431*a* and 431*b*, where the pulp

* Private communication.

from the apron flows over a trough, and then over two distributors of copper plate punched with holes 1 inch apart to break up and distribute the pulp to the sluice plates. Another one, shown in Fig. 437 of the South Clunes United mill, consists of a perforated iron plate 1 foot wide, $\frac{3}{16}$ inch thick and extending along the face of two batteries. The holes in it are $\frac{3}{8}$ inch diameter and are 1 inch center to center, arranged in squares. It distributes over the apron leading to mercury wells.

§ 522. TOTAL DIMENSIONS, AREA, AND THICKNESS OF PLATES.—The width of plates has already been discussed under sluice plates, § 519.

The total length of plates may be obtained from Table 330. It is perhaps the most important single dimension to be considered in designing plates for a mill, but it would seem better to use area instead of length as the basis of computation.

The total plate area of a mill should be sufficient to catch practically all of the free gold. With an excess of area it is difficult to keep the last plates in good condition, owing to the very small amount of gold caught upon them. It is better to have an excess than an insufficiency, however. The areas of the individual plates given in Table 330 have been summed up and the total plate area of each mill is given in Table 331.

TABLE 331.—TOTAL AREAS OF OUTSIDE PLATES.

Mill No.	Area of Plates.	Mill No.	Area of Plates.	Mill No.	Area of Plates.	Mill No.	Area of Plates.
	Square Feet.		Square Feet.		Square Feet.		Square Feet.
56.....	9.75	61.....	92.27	68.....	42.35	76.....	56.84
57.....	66.16	62.....	37.91	70.....	34.67	77.....	48.00+
	97.16	63.....	65.00+	71.....	50.43+	82.....	38.66
58.....	74.25	64.....	67.38	72.....	40.00+	84.....	36.00
	57.25	65.....	87.67+	73.....	102.00+	85.....	34.67
59.....	59.84	66.....	58.25+	74.....	92.00+	86.....	48.00
60.....	64.00	67.....	51.85	75.....	99.83	88.....	36.00

The area to be used will vary with the conditions. Where the gold is coarse, the area may be less than where the gold is fine. Note the small plate area in Mill 56, which treats ore containing coarse gold. Where inside amalgamation is practiced, the area need not be so large as where all the gold is caught outside. Where narrow sluice plates are used, the area needs to be greater than with wide apron plates. Where there are numerous drops in the line of plates, the area of the plates may be lessened. The areas shown in Table 331 vary from 9.75 square feet in Mill 56 to 102 square feet in Mill 73. The average of the 26 mills is about 55 square feet. In this connection it is well to keep in mind the fact that there are certain standard sizes made in rolling copper plates, and it is less expensive to arrange to use plates of corresponding sizes in the mill rather than to use such sizes as will necessitate cutting and waste.

The thickness of plates as shown in Table 330 is generally $\frac{1}{8}$ inch. In Mill 66 it is as high as $\frac{1}{4}$ inch, and in Mills 65, 73 and 74 as low as $\frac{1}{16}$ inch. The thicker they are the less liability there is of serious denting from articles falling on them.

§ 523. SLOPE OF PLATES.—The slope of plates is a very important adjustment. If they are too steep, the pulp rushes over them too rapidly, and the gold and amalgam have less opportunity to settle and adhere. Furthermore, the amalgamated surface will be scoured off. If they are not steep enough, then sulphurets will deposit on the plate and reduce its working area. The plates should be perfectly level from side to side. The slope should be made adjustable, although this is seldom done in the mills; the idea being, perhaps, that some stability and simplicity are sacrificed by so doing. By using a table similar to that of Mill 67 previously described (see § 517), it seems that these difficulties are overcome.

As shown by Table 330, the slope varies from 1 inch per foot or 4° 46′ in Mills 56, 59 and 66, to 2½ inches per foot or 11° 46′ in Mill 68. There are a few plates that come outside of these limits, but they are short plates on mortar lips, or on deflectors. According to Preston[39], as low as ½ inch is sometimes used.

The slope to be used depends upon the following conditions, other things being equal in each case. More slope is required for an ore with a large amount of sulphurets than one with a small amount. More slope is required for a battery with a high crushing capacity than for one with a low capacity. An ore coarsely crushed requires more slope than an ore finely crushed. A wide plate requires more slope than a narrow one, as the water is spread out in a thinner layer on the former and its carrying power is consequently lessened. In changing from wide to narrow, unless the slope is reduced on the narrow plate, there will be a tendency for it to be scoured. Mill 58 may be an example of this, where for sluice plates 46 inches wide, a slope of 8° is required, while for sluice plates 29 inches wide, 7° 35′ is sufficient. This principle is not followed by all the mills in the table, as some have the same slope on both wide and narrow plates and one, Mill 71, has a greater slope on the narrow sluice plates. Shaking plates or plates on the distributors of vanners require less slope than fixed plates. Thus in Mill 57 a shaking plate which was formerly used had a slope of only $1\frac{1}{16}$ inches per foot, while the apron plate had 1½ inches. A short plate with the pulp falling upon its head requires less slope than longer plates, as the pulp acquires a certain acceleration by its fall which helps to carry it over the plate. The greater the quantity of water used, the less will be the slope required. It is generally considered better to use only as much water as is absolutely necessary to cover the whole width of the plate and make the pulp sufficiently dilute, and have a moderately high slope corresponding, than to use a flood of water and a low slope. Mill 69 found that with an ore containing 10% sulphurets, a slope of 2 inches per foot was better than 1¾ inches, as it required less water to keep the plates clear. With the slope of 1¾ inches more water was used than was necessary for the vanners, and even then there was a slight tendency to deposit sulphurets.

TABLE 332.—SLOPE OF PLATES IN AUSTRALIAN MILLS.

Name of Mill.	Location.	Slope of Plates. Inches per Foot.	Water per Battery per Minute Gallons.
New Star of the East	Ballarat	¾	37½
Old Star of the East	"	¾	37½
Brittania United	"	1	25
Harrietville	Ovens District	¾	25
Oriental	" "	¾	20
Old Fortuna	Bendigo	1½	
New Fortuna	"	1½	
Pearl	"	1¾	33⅓
New Chum Consolidated	"	1¾	

Table 332, obtained from Rickard[18], shows that out of 9 Australian mills, 5 have a slope of 1 inch or less per foot and use all the way from 20 to 37½ gallons of water per battery per minute. None of the American mills which have a slope of 2 inches or over per foot in Table 330, use more than 20 gallons of water per battery per minute.

Sperry[20] reports that in using a Tremain steam stamp on an ore containing a large proportion of oxides of iron and manganese, it was necessary to use as much as 3,000 gallons of water per ton of ore to keep the plates clear, when they sloped 1½ inches per foot. This was reduced to 1,000 or 1,200 gallons by increasing the slope of the plates to 2 inches per foot.

It may be noted in this connection that Mill 64 (Figs. 425*a* and 425*b*) and

the Gover mill have a water trough running crosswise over the head of the plates for supplying additional water if desired. This water, falling on the plate, retards the pulp at the point where it strikes and helps to catch the gold.

The rule which appears to be generally followed in adjusting to get the best slope, is to make it as small as possible without allowing sulphurets to deposit.

Adams[1] advocates a radical departure in regard to slope. He holds that the slope of plates should never be less than 2½ inches per foot (11° 46′), because in that case an excess of water will be required to keep all the pulp moving, and then the water will be so deep that fine gold will be held in suspension and may not touch the plates. A slope below 2½ inches also allows too much quicksilver to be used, making the amalgam so soft that there is more tendency for it to be carried off the plate and cause a loss of gold. The corollary of the above is that it would not be wise to increase the slope beyond that necessary to reduce the water to the minimum favorable for stamping.

§ 524. SPEED OF WAVES AND THICKNESS OF FILM.—When the slope is right, the pulp covers the whole plate and flows down in a series of waves which roll the grains in the pulp over and over, and give them an opportunity to come in contact with the surface of the plate. The speed of these waves is an indication of correct adjustment. A few figures, which the author obtained from the mills, are given in Table 333.

TABLE 333.—SPEED OF WAVES ON PLATES.

Mill Number.	Kind of Plate.	Length.		Time for Wave to Traverse It.	Velocity of Wave per Second.
		Feet.	Inches.	Seconds.	Inches.
61	Apron plate	16	0	6	32
61	Sluice plates	8	0	4	24
65	Sluice plates	21	0	At edge, 6 At middle, 11	42 22.9
67	Apron plate	10	0	5	24
68	Apron plate	8	0	2¾	42.7
73	No. 1 sluice plates	22	0	8	33
74	Sluice plates	21	6	(a) 8	32¼

(a) Some traveled in 6 seconds at the middle, making their velocity 43 inches per second, due to the concave form already noted in § 517.

This table brings out the fact that the total range of velocity of waves (not of the pulp) is only from about 23 to 42 inches per second. The most rapid is Mill 68, which, as previously shown, has also the steepest sloping plates found in the mills visited.

The thickness of the film was taken on each of a pair of sluice plates in Mill 65. The results are shown in Table 334.

TABLE 334.—THICKNESS OF FILM ON PLATES OF MILL 65.

	At Upper End of One Plate.		At Lower End of One Plate.		At Upper End of Other Plate.		At Lower End of Other Plate.	
	At edge.	At center.	At edge.	At center.	At edge.	At center.	At edge.	At center.
Thickness in inches at crest of wave	0.190	0.166	0.078	0.094	0.103	0.064	0.110	0.150
Thickness in inches at trough of wave	0.179	0.140	0.045	0.014	0.078	0.052	0.049	0.080

The shape of the wave on the plate first measured is shown in Fig. 433, and the points of measurement are shown by the two crosses. Similarly the shape of the wave at the lower end of the other plate is shown in Fig. 434. The table shows that as a rule the film on these plates is thicker at the edge than at the center of the plate. This agrees with the fact that the wave in this mill travels nearly twice as fast at the edges as at the center. The thinner the film, the greater is the retardation. In most mills, however, the wave is faster at the

center and the film thickness would consequently probably be greater at the center. The table also indicates that the film is thinner at the lower end of the plate than at the upper end, probably owing to the fact that the pulp increases in velocity as it flows over the plate.

§ 525. MATERIALS OF THE PLATES.—Amalgamated plates may be:

Copper coated with quicksilver.

Copper coated with silver amalgam or gold amalgam.

Copper plated with silver and coated with quicksilver.

Muntz metal (copper 60%, zinc 40%) coated with quicksilver.

Pure sheet silver coated with quicksilver.

Rough board covered with amalgam.

In addition to the above, surfaces of blanket or carpet are used to catch gold and amalgam, but these cannot strictly be called amalgamated plates.

Quality of the Copper for Plates.—Whether plain copper or silver plated copper plates are used, only the purest and softest annealed Lake Superior or electrolytic copper should be employed. Annealing is necessary to soften up the hard skin formed by rolling and to make the copper porous for receiving the mercury. If the mill man is unable to purchase a copper plate already annealed, the annealing may be done as follows: the plate with the face to be amalgamated uppermost, is supported a short distance from the ground, preferably upon a layer of sand on an iron plate. A fire of shavings and chips is built beneath and the plate is heated all over hot enough to char sawdust or a piece of paper on top. It is then allowed to cool slowly or it may be chilled at once in water; it matters not which method is used so far as the annealing is concerned, but the slow cooling will probably yield the truer surface. This heating softens up the surface, making it porous, and removes all the stresses due to rolling. If, after annealing, the plate is warped or buckled, it is laid upon its table and trued up by light blows with mallet and wooden block.

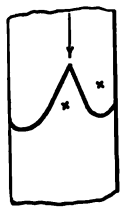

FIG. 433.

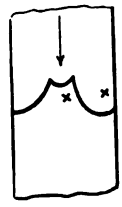

FIG. 434.

Plain Copper Plates coated with Quicksilver are used in Mill 66* and on the first 8 feet of plates in Mills 65, 73 and 74. A surface of copper amalgam is formed on such plates, which is a poorer catcher of gold than either gold or silver amalgam, and as a consequence it is necessary to run, say, 100 tons of ore over the plates before they have become sufficiently charged with gold amalgam to be good catchers of gold. The extra amount of gold lost with this 100 tons of ore is partly due to what escapes into the tailings and partly to what is absorbed into the plate. To this phenomenon has been given the name the *new plate error*. Mills 65, 73 and 74 rely upon the later silver plated plates and on the vanners to save any loss from the new plate error.

Plain Copper Plates coated with Amalgam are used in Mills 67 and 77. The author is in doubt whether Mill 72 belongs to this class or to the preceding. By the painting on of a thin coating of gold or silver amalgam, the plate becomes a good catcher of gold from the start and the new plate error, which occurs with plain copper coated with quicksilver, is avoided. Regarding the relative merits of gold and silver amalgam, the author's experience on test runs places the catching power of the latter very high. Authorities (Keith[100], Louis[10], Rickard[18]) however claim that a plate covered with gold amalgam catches gold better than one covered with silver amalgam.

Silver Plated Copper Plates coated with Mercury are used in 19 mills (see

* Since writing the above, silver plated plates have been introduced.

Table 330). The mercury unites with the silver and forms a coating of silver amalgam, thereby avoiding any new plate error. The amounts of silver used per square foot and the time intervals between replating are shown in Table 335.

TABLE 335.—SILVER PLATING.

Mill Number.	Amount of Silver Used per Square Foot.	Interval of Replating.	Mill Number.	Amount of Silver Used per Square Foot.	Interval of Replating.
	Ounces.	Months.		Ounces.	Months.
56	2	12	68	1	Never.
57	1	.....	71	1	12
58	.....	12	73	2⅛	.....
59	2⅛	.....	74	2½	.....
60	5	.....	82	1	Never.
61	1¾	24 to 36	84	1	.....
62	2	8 to 12	86	1	.....
65	2½	.....			

Five use one ounce per square foot, one uses 1¾ ounces, two use 2 ounces, four use 2½ ounces, and one uses 5 ounces per square foot. Mills 68 and 82 do not replate because hard amalgam accumulates and the plate is melted down after three or four years.

It is claimed that an ore rich in free gold will require less silver per square foot and require replating less often than a poor ore, because the gold amalgam forms fast enough to prevent the scouring off of the silver by the sand. Table 335, however, does not bear out this statement; the mills with two or more ounces silver are treating as rich or richer ore than those with 1 ounce. With ore containing $2.00 to $6.00 free gold per ton 1 ounce of silver per square foot is claimed to be too little.

The interval of replating depends not only upon the thickness of the plating and the richness of the ore, but also on the care used in scraping the plates.

Comparison of Plain Copper and Silver Plated Plates.—Hardman prefers plain copper plate, coated with gold amalgam, for a company mill, as, if properly managed, it catches gold just as well as a silver plated plate, and it costs less than the latter. For a custom mill he prefers silver plated plates, to overcome the overlapping error due to the absorption of amalgam by a plain copper plate. By using a silver plated plate, practically the full value of amalgam can be recovered from the plates after each run. The use of silver amalgam on plain copper will also prevent the gold in the ore from coming in contact with the copper to any considerable extent, and thus overcome the overlapping error, but its use in custom mills is not general as it brings in another item in settling accounts.

Silver plated copper is easier to keep clean than copper plate, but even on the former some stains, due to oxidation of copper, occur. It is claimed by some mill men that the pickling a plate undergoes before the plating, causes salts to be retained which later come out and cause stain. Louis Janin, Jr.,* holds that where the gold is fine, requiring the plate to be kept in first class condition, silver plated plates are preferable since they can be kept in prime condition with less attention than copper plates.

At the Harrietville mill in the Ovens district, Victoria, two batteries working side by side on the same ore, each had three plates in series. In No. 1 battery there was one silver plated plate followed by two of plain copper in series. In No. 2 there were two silver plated plates, in series, followed by one plain copper. After a year's run the last plate of No. 1 was well amalgamated, while the last plate of No. 2 was scarcely whitened. This was taken to indicate that silver plated plates were much better for catching amalgam than were plain copper.

At Sierra Buttes mills, one set of batteries gave up silver plated plates because

* Private communication.

the plating wore out too fast. The ore in this case contained sulphurets. Another set of batteries treating ore with no sulphurets, could not work satisfactorily without silver plated plates, presumably on account of the amount of stain. The presence of sulphurets cannot have been the whole trouble, as many mills are using silver plated plates successfully with ores containing sulphurets.

A comparison of plain copper with silver plated copper amalgamated plates at the Colombian mines, Remedios district, Antioquia, Colombia, has been given by E. Halse.* The ore is quartz, containing from 1 to 5% of sulphides, chiefly iron pyrites with some galena and blende. The sulphides carry most of the gold and silver values although some free gold occurs in the ore. From the stamps the pulp passes over an upper amalgamated plate 3 feet 2½ inches wide, and 6 feet 6 inches long, followed by a lower plate of the same width but only 1 foot long; thence over a mercury trap to blanket tables and finally to waste. The concentrates caught on the blanket tables are further concentrated in a narrow chest and on an inclined table; the heads from this treatment have the gold extracted by an arrastra, while the tailings are shipped to England. Mercury is added periodically in the stamp mortar.

The accompanying table shows the comparative results of work extending over considerable periods of time. The table shows that of the total gold recovered, the silvered plates yielded 15% more than the plain copper, and the percentage of gold caught above the blankets was 16.72% greater.

Gold Saving Appliance.	Plain Copper Plates.	Upper Plates Silvered; Lower, Plain Copper.	Silvered Plates only. (a)
Mortar	15.46%	14.99%	20.97%
Plates	53.975	66.7625	69.17
Mercury traps	5.74	2.645	1.755
Blankets	12.18	3.9075	1.305
Arrastra	12.645	11.695	6.80
Totals	100.000%	100.000%	100.000%
Gold caught above the blankets	75.175%	84.3975%	91.895%

(a) These consisted of a lip plate 3 inches long and an apron plate 7 feet, 3 inches long.

This is partly due to the fact that more mercury was used with plain copper plates. The plain copper plates tarnished badly owing to acid water, and had to be washed frequently with potassium cyanide solution. The use of a silver amalgam coating, of nitric acid, or of iron riffles to promote electrolytic action did little or no good. Unslaked lime and lumps of potassium cyanide in the mortars partially remedied the difficulty. Silver plated plates tarnished not at all, and the use of all nostrums was discarded except that of putting 20 to 50 pounds of lime in the mortar daily to counteract the acidity of the water. Silver plated plates when new required no dressing except the rubbing in of a little mercury, but after some months a daily wash with sal ammoniac solution was needed.

Halse considers that there is a greater loss of gold with plain copper plates due: (1) to amalgam passing by the tarnished surface; (2) to amalgam loosened from the plates by the washing with cyanide and lost mechanically; (3) to amalgam lost chemically by the same reagent. He estimates this loss to be at least 5%, and possibly 10%, of the total gold recovered. The fineness of the bullion was also found to be higher with silver plated plates. The ore yields 0.96 to 2.32 ounces of bullion per ton; this bullion averages about 600 fine in gold and 350 fine in silver.

James R. Cooper† writes in comment upon Halse's tests that the larger amount of mercury used with the plain copper plate will in part or in whole ac-

* *Inst. Min. and Met.*, Vol. IX., (1901), p. 155.

† *Engineering and Mining Journal*, Vol. LXXI. (1901), p. 230.

count for the carrying of more gold down to the blankets, and that the relative amount of stain on the copper plate is a measure of the impurity (oxygen) in the plate, a pure soft copper being free from trouble, an impure hard copper with high percent. of oxygen giving great trouble, and since Halse does not state the analysis for oxygen of his plain copper plate the results are not conclusive.

In reply* Halse states that no analysis of the copper plate is available, but that he considers it to have been of good quality, being that commercially known as "brazier's copper." The annealing was carefully done and the whole surface scoured to bright copper before amalgamating. He thinks that the staining was not due to impurities in the original copper, although he is unable to give positive proof.

Sharpless[71] gives an instance of a silver plated plate which, with warm water (about 80°F.) flowing over it, became covered with a very hard crystalline amalgam and caused much trouble. Spots where the silver was worn off, however, remained in good condition.

Muntz metal plates coated with mercury (copper 60%, zinc 40%) are used in the Thames district of New Zealand, originally as an expedient, but now they are preferred to copper. According to Rickard, they absorb comparatively little amalgam, making them efficient from the start, and they can be cleaned of amalgam without the use of steel scrapers, and are therefore advantageous for custom mills, except where the ores are comparatively rich. They are cheaper, the amalgam on them is not sickened so much by base minerals, that is, by many of the minerals containing lead, copper, iron, arsenic, antimony, etc., and stains from grease, etc., do not form to such an extent as on copper plates. This may be due to electrolytic action of the zinc and copper liberating hydrogen from the water, which has a reducing effect. On the other hand, acid water causes a scum in some cases, which does not occur with copper. After a time, Muntz metal plates become brittle when saturated with amalgam and break when cleaned. According to Louis Janin, Jr.,† several mill men in New Zealand claim that the absorption of gold by Muntz metal is greater than by copper.

Plates of Pure Silver coated with Amalgam answer quite as well or better than silver plated copper plates, because there is less tendency to stain. Their high first cost, however, and their liability to be stolen are points against them.

Rough, unplaned Pine Board Surfaces.—Mills 65, 73 and 74 use a rough pine board upon the mortar apron, 1 inch thick and 12 inches wide, flush with the lip. On this the pulp falls from the screen. When used a month it becomes coated with amalgam in patches, and can be cleaned up in one-eighth the time required for a copper plate. It will not stand the jar of the stamps like a copper plate, that is to say, the amalgam will not adhere and accumulate so thick as on copper.

Carpet or Blanket Surfaces.—In Mill 62 Brussels carpet is laid over the last section of the apron plate. Carpet tables, after plates, are also used in Mill 76. For further consideration of these the reader is referred to § 505 and § 506.

TREATMENT OF PLATES.—Under this general heading will be considered:

The Preparation of New Plates.

Maintaining Plates of the Right Consistency.

The Regular Dressing of Plates to Keep the Surface in a Bright Condition.

The Cleaning or Removal of Accumulated Amalgam from Plates.

§ 526. GENERAL CONSIDERATIONS.—Before taking up each of these subjects it will save repetition to make a few general remarks which apply to all.

Copper is easily acted on by air and water to form a coating. Similarly a coating or stain of varying colors will form on a plate covered with copper amalgam. This stain, commonly called "verdigris" by mill men, according to Louis is

* *Eng. and Min. Jour.*, Vol. LXXII., (1901), p. 464. † Private communication.

hydrated oxide of copper, with or without some carbonate. When water which contains sulphates is used, a basic sulphate may also form. Sulphide of copper probably also occurs in the coating. This coating may be removed mechanically by the use of some abrasive, as sand, or chemically by dilute hydrochloric, nitric or sulphuric acids, a solution of a handful of salt and ½ teacup of sulphuric acid in 2½ gallons of water, ammonia, sal ammoniac or potassium cyanide. It is now considered better to avoid the use of chemicals as far as possible except possibly potassium cyanide in the treatment of plates. It is claimed that the use of dilute acids, especially nitric, either in the preparation of new plates or in the dressing of plates, causes the formation of salts of copper, which will sooner or later work out to the surface of the amalgam and make a stain. Nitric acid also dissolves silver from silver plated plates. This stain may sometimes be formed externally, as, for example, where the ore or water contains acid sulphates of iron or copper formed by the oxidation or roasting of pyrites. In this case the action is probably aided by oxygen and carbonic acid from the air and water.

There is another great difficulty in amalgamation besides the staining of plates, that is, the "sickening" and "flouring" of mercury, not only on plates, but also in the stamp mortar. These two terms are used rather promiscuously to denote the separation of mercury into minute globules by agitation, as in the stamp mortar, which globules are prevented from reuniting by the presence of a film of oxide, grease or other foreign substance. Some authors define flouring as the separation into globules mechanically by agitation, and sickening as the coating over of these globules chemically, which prevents them from reuniting again. Among the substances are oxides, sulphates, sulphides or arsenides of base metals (lead, copper, iron, bismuth, arsenic, antimony, etc.) which have come from the ore or water. Any easily oxidizable metal present in the mercury itself oxidizes and may cause sickening. Ores carrying talc, serpentine, graphite or clay form a coating on mercury, and cause sickening. Any Babbitt metal, which may accidentally get into the stamp mortar, will cause sickening. Carbonate of lead is another cause.

Trouble from grease may be remedied by the use of an alkali, such as soda (soda ash), lye or burnt lime (CaO), which are added to the mortar at regular intervals. Any trouble from the grease of miner's candles may be largely avoided by the use of stearine candles instead of tallow. The advantage of stearine is that it does not drip over the rocks in the mine. A candle end of either material however should not be allowed in the mortar. Alkalies also remedy trouble from acidity. An easy remedy for acidity of the water is to run it over broken limestone. An instance of the failure of lye is given by Sperry, who found that lye (caustic potash) which was used in the mortar to counteract grease, reacted with the sal ammoniac used to dress the plates and produced ammonia, which precipitated iron from the water as the hydrate and formed a greenish scum. The lye was discontinued and the scum disappeared.

An extreme example of acid water is that of the Peak Hill mine, New South Wales, where the ore undergoes a rough roasting in heaps previous to stamping. A small amount of copper in the ore is changed to sulphate, and is dissolved by the water during stamping. As the water was used over and over, it soon became strongly charged with this copper sulphate, which deposited a film of copper on any fine particles of iron abraded by wear, and in this condition the iron, so coated, was readily amalgamated by mercury. Instead of the ordinary gold amalgam, a very impure slime amalgam was obtained. The remedy which effectually removed the difficulty was to cease using the water a second time.

A graphite coating on plates may be removed, according to Hardman, in less

than an hour by putting a shovelful of salt into the battery. As to whether this will act for the talc and serpentine coatings, the author is not informed.

Sodium amalgam has a powerful reducing action, which reduces the metal from any oxides, sulphates, sulphides, chlorides, etc., of base metals, and thereby removes these causes of flouring. This reducing action, however, causes base metals to go freely into the mercury, so that it may do as much harm as good, and, besides, sodium amalgam is troublesome to make and keep. Its use is therefore generally not favored. The rule usually given for its employment is to add it to the mercury fed to the battery in such amounts that the mercury will just adhere slightly to the edges of a nail that has been filed bright. If it coats the nail all over, more mercury should be added, while if it does not adhere at all, more sodium amalgam is needed. W. L. Libbey advocates that it be made much weaker than this, and reports that mercury containing 1 part sodium in 2,000, works very successfully with a Nova Scotia ore containing arseno-pyrite and talcose slate, so that the loss of mercury in milling is less that $\frac{1}{10}$ ounce per ton of ore.

An electric current also reduces base metals similarly to sodium amalgam, and was found by the author in the Mayflower mill, Colorado. The use of a galvanic couple of iron and copper, for the same purpose, was first recommended by Aaron. The author found it in use in Mill 67 where an iron strip is used at the tail of the plates, as shown in Fig. 428. This strip was intended primarily to serve as a fastener, but its action was found to be very favorable in preventing copper stains on the plates.

An exception to the common objection to sulphuric acid is made by Louis, who says that he has kept new plates beautifully clean by means of a narrow leaden trough fixed just above the top plate, which was kept filled with moderately dilute sulphuric acid, and fitted with a siphon formed from a strip of blanket, so as to allow a continuous supply of acid to drip on the plate. This acid acts not only by direct solvent action, but also by the action of electric couples produced between the copper and any bits of steel or iron which may have been abraded from the shoes and dies.

§ 527. AMALGAMATING NEW PLATES.—This is divided into two parts: first, the cleaning of the copper by any of the agents previously mentioned, to remove oxides and grease, and second, the coating of the plate with quicksilver or amalgam. The requisites of the process are that an even coating of amalgam be obtained, and all oxide of copper, grease and chemicals used in the process be removed. Owing to the rapid formation of oxide of copper when exposed to the air, it is necessary to continue the use of the cleaning agents throughout the process. The amalgamation is best done with mercury. Nitrate or chloride of mercury or sodium amalgam have sometimes been used but are not favored.

Authorities differ somewhat in detail as to the best method of preparing plates. Accordingly, several methods are here given.

Copper plates, coated with gold amalgam, are prepared by Hardman, at Mill 67, as follows: Place plate in horizontal position and wash with water. Paint the whole surface of the plate with a saturated solution of cyanide of potassium, using a 4-inch flat paint brush and moving the brush transversely across the plate. The solution dries rather rapidly and one coat is sufficient. Leave plate undisturbed for 24 hours, until its surface has turned a dark green. Scrub the whole plate bright, beginning at the top, by the use of some fine sand (usually screened from old dry tailings), and a scrubber made of several thicknesses of gunny sacking wrapped around a small block of wood. After the green scale has all been scoured off, wash the plate with water and sprinkle mercury upon it and rub it in with a clean chamois leather, moistening both plate and rubber from time to time with a solution prepared by mixing one part of the saturated

solution of potassium cyanide with five parts of water. The mercury "bites" immediately. This scouring and amalgamating can easily be done upon a plate 10 feet long and 54 inches wide, by one man, in 8 hours. The plate should be a perfect mirror when done. Give the plate its proper slope and run water over it all night. The next morning, if any green stains have appeared, scrub such spots to bright copper and re-amalgamate. Paint the upper two or three feet with very fine gold amalgam, or, if gold amalgam is not available, with silver amalgam. The fine gold amalgam is best obtained by taking a piece of old copper plate well coated with gold amalgam, and "sweating" it carefully over an ordinary kerosene lamp. The adhering amalgam is scraped off, put into a Wedgewood mortar with a little quicksilver and ground well together. Rapidly pouring off the mercury after skimming, leaves the coarser particles of amalgam behind, while the portion poured off, if allowed to stand 24 hours, may be carefully decanted from the fine amalgam which has settled to the bottom and which will be found to be of the consistency of cream. The plate thus painted is allowed to stand for at least 24 hours, and as much longer as possible before using. The plate is kept quite soft with mercury during the first two or three days of its use, the mercury and amalgam being brushed up toward the upper end of the plate with a flat paint brush.

The method of preparing plain copper plates, coated with gold amalgam, at Mill 77, is as follows: Scour off the surface scale with tailings and water until the surface is bright and smooth. Rub in mercury with tailings and very dilute potassium cyanide solution until the whole surface is bright and soft. Rub in gold amalgam in the same way with tailings and cyanide. This gold amalgam is the needle-like mass of crystals which settle at the bottom of the strainings of mill amalgam, heated with hot water before straining.

For preparing plain copper plates, coated with quicksilver, at Mill 66, the practice is as follows: Scour the plates with sandpaper, followed by emery cloth or with tailings and a wooden block 4 inches square or with a piece of grindstone, until the face is perfectly bright. If necessary, the sand is often moistened with a weak solution of potassium cyanide and spots are often removed with dilute nitric acid. Apply repeatedly a strong solution of potassium cyanide by means of a soft paint brush. After two days sprinkle mercury on this cyanide coat and rub it into the plate with a moist cloth, using tailings to help in the brightening. When the plate is thoroughly amalgamated, put it into place and it is ready for use. More than the usual amount of mercury is added to the mortar that the new plate may become normal. This takes from two to four weeks, during which time the plates are continually discolored by copper salts. To get these into solution, potassium cyanide or ammonia is added to the battery water.

§ 528. Louis[10] gives the following method of preparation of plain copper plates coated with quicksilver: Fine sand (sea sand if obtainable) is sprinkled on the plate, well moistened and rubbed in with a block of wood until every portion of oxide is removed and the plate has a uniform red surface, care being taken at the same time not to scratch it. The sand is then washed off, and the plate dried and polished with fine emery paper folded over a block of wood. A perfectly clean dry surface is thus produced. A mixture is then made of about 10 parts sand to 1 of coarsely pounded sal ammoniac; this mixture is damped with water and clean pure mercury is sprinkled into it by squeezing through canvas. The mixture is then rubbed over the plate with a piece of canvas or blanket when amalgamation will at once begin; more mercury must be sprinkled on the plate from time to time, and the rubbing continued until a uniformly bright silvery surface is obtained. Each square foot of copper will require about ½ ounce of mercury. The plate is next well washed with water and kept until the following

day. It will then probably be found that the plate is dulled and covered with a coating of a greenish gray substance. Usually the plate is brightened up with a dilute solution of cyanide together with a little mercury.

For preparing plates coated with silver amalgam, he proceeds in the same way except that he rubs in silver amalgam instead of mercury. The silver amalgam is prepared as follows: Dissolve a sufficient quantity of silver coin (about ¼ ounce per square foot of surface of the plates) in dilute nitric acid in a porcelain basin, with the aid of a gentle heat. Evaporate to dryness very gently, preferably over a water bath, and heat till the saline mass commences to fuse, and till all its bluish tinge is turned to grayish black, this change indicating that all the soluble cupric nitrate is decomposed, insoluble cupric oxide being left behind. Dissolve in a small quantity of water and filter into a jar or beaker. Add pure mercury to the weight of about three times that of the silver used and float a few pieces of bright iron on the mercury. The silver will at once commence to precipitate and be absorbed by the mercury, forming silver amalgam, the process taking a few days to complete thoroughly. The silver amalgam so produced should be of pasty consistency, and contains about 3 parts mercury to 1 part silver. This amalgam is then rubbed hard all over the surface of the amalgamated plate, which is kept moist with a dilute solution of potassium cyanide; a good rubber for this purpose is made from a strip of pure india rubber ⅜ inch thick, and about 6 inches long screwed to a strip of wood which forms its handle and projecting ¾ inch therefrom. The rubbing must be continued until the whole of the plate is completely coated with silver amalgam, which will then keep the plate from tarnishing.

The author's experience has been that the removal of any copper from the silver is unnecessary, and that nearly all of the silver is precipitated in from 30 to 60 minutes, and what little is left may be extracted for another occasion. The essential thing is to keep the solution acid to prevent the precipitation of basic salts of mercury; a large excess of acid, however, should be avoided. It has been found best to amalgamate the plates with mercury first, then to dry them carefully with cotton batting, as the least addition of water will bring out the yellow stain. The silver amalgam can be painted on with a long bristle flat brush just before the plates are to be used, or, preferably, over night. In the latter case, the amalgam forms a harder coating upon the surface, which is more permanent. The proportions which have been found by the author to work satisfactorily are to use for each square foot of plate: silver, 7 grams (about ¼ ounce); nitric acid (1.2 specific gravity), 28 cubic centimeters; water, 60 cubic centimeters; mercury, 112 grams. Precaution should be taken not to boil the acid in dissolving the silver, as the volume of the solution is thereby lessened.

For coating Muntz metal plates with quicksilver they are scoured with fine sand, washed with water, cleaned with sulphuric acid (1 strong acid to 6 of water) and then the quicksilver rubbed in.

§ 529. The method of electroplating a copper plate at Mills 65, 73 and 74 is as follows: If the plate is an old one, first heat it to a cherry red to drive off the quicksilver. Paint the back of the plate with a coat of asphalt varnish and leave 24 hours to dry. This serves to prevent the back from being affected during any of the subsequent operations.

The cleansing or "pickling," as it is called, has several steps. First leave the plate over night in a solution of 1 part sulphuric acid to 16 parts water. In the morning, take it out and scrub with pumice and a bristle brush. Pour a mixture of 1 part nitric acid to 2 to 3 parts sulphuric over the plate, until all parts are acted upon. Wash thoroughly with water and scrub. Wash with a solution made by dissolving a spoonful of mercury in an excess of nitric acid and diluting in a tub of water. This leaves a thin film of mercury on the plate

and prevents oxidation. Wash and scrub with a solution made by dissolving 4 pounds of potassium cyanide in 15 gallons of water. Repeat without scrubbing. The plate is then ready for plating.

The bath consists of a solution of silver chloride in potassium cyanide. To make it, dissolve fifty ounces of pure silver (a convenient amount) in nitric acid, evaporating solution to dryness, making thereby silver nitrate. Put this with 5 gallons of water into an earthen jar. Place in a darkened room and add common salt, which precipitates the silver as silver chloride. The theoretical amount of salt necessary to complete the reaction is 0.5421 parts by weight for each part by weight of silver used, but in practice it will be necessary to add a little excess. Too great an excess is to be avoided as silver chloride is somewhat soluble in strong brine. Vigorous stirring is necessary to effect the precipitation. Filter the precipitated silver chloride and wash thoroughly and dissolve it in potassium cyanide solution, using only just enough of the latter to dissolve it completely. Add one-fourth as much more of cyanide and dilute with water until it contains 3 ounces of silver per gallon; this bath is ready for use. The bath deteriorates while depositing and requires fresh addition of cyanide of silver from time to time. The chloride of silver dissolved in potassium cyanide is preferred at these mills to cyanide of silver dissolved in potassium cyanide because it is claimed that the silver deposited from the former solution is not so compact, and is a better catcher of gold than that from the latter solution, which is more commonly used for plating tableware, where the deposit is required to be finer grained and harder.

The vats (see Fig. 435) used for the bath are of wood, with the surface and corners made tight by melted asphalt. They are 6 feet 2 inches long, 30 inches deep and 20 inches wide. There are 13 anodes of silver suspended from a rod along the middle of the tank so that their surfaces are parallel to the sides of the tank. Each is 3 inches wide and 2 feet long, making the total anode surface 13 square feet. Two copper plates, each 6×2 feet, are put in at once, one at each side of the tank, and 10 inches distant from the anodes. The current is 25 amperes with 4 volts, and is obtained from a dynamo driven from an independent water wheel. The thickness of the plating amounts to 2½ ounces per square foot. This is determined by weighing a test plate A, which has an area of 8 square inches. Plating takes from 8 to 16 hours, depending chiefly on the condition of the bath. The greater the anode area the more spongy the deposit. When the plating is finished, the plates are taken out, washed with water and amalgamated by rubbing with mercury.

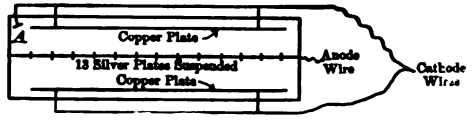

FIG. 435.—PLAN OF SILVER PLATING VAT.

John Hays Hammond[40] (1888) gives the cost of a plant for plating 6×4-feet copper plates at about $1,200, of which $1,100 is for the solution. A dynamo requiring 1½ horse power will be required to do the work and will cost about $225 more. The cost of plating is a little more than the actual cost of the silver used. Silver taken from the solution must be replaced by the addition of equivalent silver anodes.

At Mills 68 and 82 the cost of an apron plate, 8 feet long, 52 inches wide, ⅛ inch thick, and coated with 1 ounce silver per square foot, is $90.20.

Halse* considers the proper preparation of silver plated plates to be very essential to good work. His method is to scour the plate (previously plated with

* *Inst. Min. and Met.*, Vol. IX., (1901), p. 155.

1 ounce of silver per square foot) with a mixture of wood ashes and fine sand, wash with water, rub in mercury with a mixture of sal ammoniac and wood ashes, let stand twelve hours during which time patches of amalgam appear all over the plates, rub these in with a little mercury, which concludes the operation.

§ 530. MAINTAINING PLATES OF THE RIGHT CONSISTENCY.—Plates should not be run too hard or too soft. If too hard they will fail to catch the gold. If too soft, the mercury flows off the lower end of the plates, wasting gold and mercury. Their condition is judged by the feeling of the plate next to the battery. When just right the amalgam should yield to the pressure of the finger, as does putty, but drops of mercury should never exude and run down. The amalgam is generally softer on the later plates than on the earlier. The amalgam is kept in the right condition by regulating the amount of mercury fed to the mortar. If too hard, increase the mercury fed; if too soft, decrease it.

Where the gold is fine, the plates should be run dryer or harder than with coarse gold. Fine gold also requires a larger and more frequent addition of mercury. The amounts used by the mills have already been given in § 190. In many mills, mercury is added directly to the plates as well as inside the mortar in order to keep them in the right condition.

§ 531. DRESSING OF PLATES.—The act of brightening the surface of a plate to remove the stain and make it more active is called dressing the plate. The act of scraping off the amalgam to save it is called cleaning the plate. As shown in Table 336, the dressing of plates occurs at various intervals in different mills. Every 12 or 24 hours is perhaps the most common.

TABLE 336.—DRESSING AND CLEANING PLATES.

Mill No.	Interval of Dressing.	Material for Dressing.	Interval of Cleaning.	Mill No.	Interval of Dressing.	Material for Dressing.	Interval of Cleaning.
	Hours.		Days.		Hours.		Days.
56.....	12	.....	7	68 (*c*)..	2	Mercury and cyanide..	1
57.....	.....	.....	1	68 (*d*)..	6	" "	7
58.....	(*a*) 24	Mercury and cyanide..	1	72.....	24	Cyanide.....	1
59.....	12	Mercury.....	14	73 (*b*)..	24	Mercury and cyanide..	1
61.....	24	Mercury.....	1	74 (*b*)..	24	" "	1
62.....	4	See text.....	14	75.....	24	Mercury.....	30
63.....	12	.....	.....	77.....	12	Mercury and cyanide. e	1
64.....	6	Cyanide.....	1	82 (*c*)..	2	" "	1
65 (*b*)..	24	Mercury and cyanide..	1	83 (*d*)..	6	" "	7
66.....	24	" "	1	84.....	2	Mercury.....	1
67.....	½ 5 or 6	Brush or chamois.... Mercury	13	86.....	6	Mercury and cyanide..	1

(*a*) All except those on the vanner distributors, which are dressed once a week. (*b*) This applies only to the No. 1 sluice plates. The No. 2 sluice plates are dressed and cleaned once a fortnight and the plates on vanner distributors once a week. (*c*) Apron plates. (*d*) Vanner plates. (*e*) The cyanide solution is made by dissolving two ounces in three gallons of water.

Mill 67 rubs up the plates with a brush or chamois every half hour, while in some mills there are short plates on deflectors which are not dressed except at the time of the fortnightly cleaning. Plates near the head are often dressed more frequently than those farther away. The interval depends to a great extent upon the conditions. New plates must be dressed more frequently than old ones. A rich ore or an ore which contains substances which tend to cause a stain or scum on the plates, will make frequent dressing necessary. Dressing should never be delayed until the surfaces become too hard, and yet it should not occur any oftener than is necessary to keep the plates bright, as it causes a waste of time.

Any of the chemicals previously mentioned may be used with mercury for brightening the plates. The idea is gaining ground, however, that the use of chemicals is to be avoided as much as possible, and, as shown in Table 336, potassium cyanide is almost the only chemical used to-day. Even this is to be used very sparingly, not only because of its well-known property of acting as a solvent

for gold, but also because an excess of it is said to be harmful to the plates. W. J. Loring and others hold that too much cyanide causes the amalgam to become hard and glassy. The immediate effect of adding cyanide is to cause the mercury to drain away from the amalgam.

According to John Hays Hammond, 1 or 2 pounds of potassium cyanide is sufficient to last a 40-stamp mill a year, where the ore or water contains no harmful ingredients. At Mill 77, which has considerable iron pyrites and acid water, 260 pounds per year are necessary in treating 28,793 tons of ore with 75 stamps.

At Mill 62 the plates are dressed with a wash made by adding sodium amalgam, the size of a pea, to 1 pound of mercury, which has been well cleaned with dilute nitric acid. This mixture is covered with a strong solution of potassium cyanide and allowed to stand about three days, until all signs of working have ceased. A weak solution of sulphate of iron (Ferrous sulphate) is finally added and the wash kept in a tightly corked bottle, as it will spoil if exposed to the air. Whatever of value this receipt may have is probably due to the fact that the mercury is entirely free from oxygen.

The last plate in the line is often difficult to keep in good condition unless it is silver plated. This is due to the fact that the amount of amalgam which collects on it is very small, and often not sufficient to prevent the plate from being scoured down to copper, and consequently liable to stain. For this reason, it is an advantage to have plates made in sections, which can be moved around in rotation (see § 520).

The consideration of the individual methods of dressing plates will be reserved to be taken up jointly with methods for removing accumulated amalgam.

§ 532. Cleaning or the Removal of Accumulated Amalgam from Plates.—As shown in Table 336, this takes place at intervals varying all the way from 1 day (24 hours) to 30 days. The former is by far the more common, and in a few mills the cleaning occurs at the same time as the dressing. It is claimed that more amalgam is obtained by frequent cleaning, but it is a question which will be decided by the ledger whether the increase is sufficient to pay for the additional time lost in cleaning.

In a general way, the cleaning consists of the softening up of the amalgam by the use of quicksilver rubbed in with a cloth or brush, and the collection of the amalgam by a rubber scraper. A steel scraper for removing patches of hard amalgam is recommended in some mills and condemned in others. After the amalgam is removed, the plate is dressed and is then ready for use again. It is found in most mills that cleaning plates in the way just indicated does not remove all the amalgam, but that there is a tendency for a layer of hard amalgam to gradually build up which cannot be removed except by: (*a*), prolonged scraping; or (*b*), "sweating" with boiling water or hot sand; or, in some cases (*c*), by hammering and buckling the plate; or (*d*), by acid treatment. A thin coating of amalgam should always be left after cleaning in order to have the plate retain its efficiency as a catcher of gold. It is generally considered better not to allow this hard amalgam to collect to any great extent as it is liable to make the plates work unevenly. It also represents so much capital tied up, and, finally, it is a temptation to theft. In custom mills, its growth will cause an "overlapping" error with each succeeding run, which can hardly be tolerated.

§ 533. Details of Methods for Dressing and Cleaning Plates.—For purposes of illustration, the details of the methods of dressing and cleaning as practiced in several mills, will now be given. At Mill 73 the cleaning and the dressing are done at the same time. The description which is here given is largely taken from W. J. Loring.[81]

The first 22 feet of plates, or No. 1 sluice plates, are dressed and cleaned every morning, two men usually working adjoining batteries. As has previously been

noted, these plates are double in this mill, so that it is merely necessary to plug out one plate, turning the whole pulp on the other, which does double work during the time of cleaning and dressing. The plates are first hosed off with clean water to remove all sand, sprinkled with sufficient quicksilver to wet them all over and scrubbed with a whisk broom to loosen as much amalgam as possible. They are then rubbed down with a piece of 75% pure india-rubber gum ½ inch thick and 4×7 inches in size. The amalgam so collected is removed by an amalgam scoop. The plates are again rubbed with the whisk broom, mercury being sprinkled on at the head as required. The last section is always brushed upward from the extreme end, so that in case any amalgam should be hanging to the edge of the plate, it will be brushed up to where it can be readily seen and picked up. Every five or six days, a weak solution of potassium cyanide made by dissolving two or three lumps of cyanide in a pail of water, is used. The time required for two men to dress 24 plates, each 22 feet long and 2 feet wide, is from 1½ to 2 hours. Once a month, on the day before the batteries are to be cleaned up, these plates are scraped for removing the hard amalgam, as follows: After the soft amalgam has been removed with a rubber scraper, as previously described, then the surface is scraped with steel scrapers, made of old files bent at right angles about 2 inches from one end and ground to a sharp edge, as shown in Fig. 436. The edge should be perfectly straight across, except at the corners where it is slightly rounded. The amalgam is nowhere entirely removed, the purpose of the scraping being merely to reduce it to a thin film. Most of the scraping is needed upon the upper part of the plates, as with the exception of a few isolated spots, the amalgam does not accumulate to much thickness below the first 8 feet. Great care is taken in using scrapers on silvered plates, as it takes but little scraping to cut the silver, which not only spoils the plates, but makes a very low grade of bullion. The amalgam removed is transferred to an enamel-lined cast iron kettle by an amalgam scoop. The plates are next sprinkled with quicksilver and scrubbed thoroughly with a whisk broom, care being had to put quicksilver on all parts. Then the amalgam is collected again, using only a rubber and scoop to transfer it to the kettle. After going over the plate once more with a whisk broom, sprinkling a little quicksilver at the head as required, the pulp is turned on and operations are resumed. For this monthly cleaning and scraping of the twelve pairs of No. 1 sluice plates, the force required is six men for four and one-half hours, and then four men for one and one-half hours.

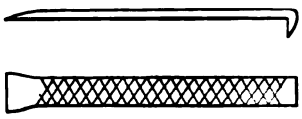

FIG. 436.—SCRAPER.

In this mill nothing is done to the 8 feet of No. 2 sluice plate except at the time of the fortnightly clean up of the mill. At that time, the water is turned off, the stamps hung up, the plates hosed off, scraped with a steel scraper and the amalgam removed. Next quicksilver is sprinkled on and the plates scrubbed with a whisk broom, and amalgam is collected by a rubber and removed. Finally they are dressed with quicksilver and a whisk broom. The plates on the vanner distributors are dressed and cleaned every week in the same way as the sluice plates just described, except that the stamps are not hung up, but the vanner is simply stopped, and the pulp coming to it is diverted to another vanner, which, temporarily, does double work.

The preceding description covers the regular treatment of all the plates in Mill 73. There is, however, an additional cleaning which takes place after a plate has been in use a long time, and the silver has scoured off in spots which makes it very troublesome to keep in good condition. In this case, the plate is taken out, the soft amalgam is first removed by the rubber and put by itself.

then the hard amalgam is scraped off until the copper appears, and this is put by itself. Finally a layer of the copper is scraped off, and the plate is sent to be silver plated, as described in § 529, or, if it is in very bad condition from dents and wear, it is cut up, melted into bars and sold for the gold and silver which it contains.

At Mill 57 the hard amalgam which gradually accumulates on the plates, is removed periodically by first softening it by pouring boiling water over the plates or by immersing them in boiling water. The softened amalgam is then easily scraped off. After a six months' interval, this process of "sweating," as it is called, yielded 1,703 ounces of amalgam, from which 600 ounces of gold were obtained, valued at $10,524.82. This was from the plates of forty stamps. At Mill 59, which also has 40 stamps, this process of sweating yielded $19,000 from the outside plates after an interval of 1½ years.

Mr. E. R. Woakes[72] tells of a mill in which the gold was of a high fineness, often of 940, and, at the same time, very finely divided, and the amalgam, which remained after cleaning every 8 hours, was very hard even though mercury was used in considerable excess. To remove this, after one month, by a steel scraper from a lip plate 48 inches by 10 inches, took a man half a day. This difficulty was overcome by the use of hot sand at the time of the monthly cleaning. For the lip plates, this is applied by placing them in a box with layers of the sand between them, which has been previously heated to near a dull red heat. After about half an hour, these are taken out by tongs and scraped, the amalgam coming off like butter. The upper 4 feet of the apron plates also have hot sand spread upon them. As it cools it is replaced by more hot sand, until a trial shows the plates to be soft. Ten minutes' application of the scraper then takes off the amalgam and leaves the plates in good condition for catching the gold.

§ 534. At Mill 67 the plates are rubbed up with a brush or chamois skin every half hour. Every 6 hours they are dressed with mercury. They are cleaned after each run, which usually lasts 13 days. The method is as follows: The stamps are hung up, the water shut off, and the sand washed off the plates with a hose. Mercury is sprinkled from the hand over the upper 3 feet of the plate, and then spread transversely by a flat paint brush 5 inches wide. The whole plate is gone over in this way. Then the whole plate is rubbed down with chamois skin from the top toward the middle, and from the bottom up toward the middle. All pimples are removed by a scraper made from an old saw blade. Amalgam is then removed by rubber and scraper to a bowl. The plate is again brushed transversely to spread the mercury, the water is turned on and the stamps started.

Every month or two, in order to remove the accumulations of hard amalgam not removed by the preceding treatment, without recourse to scraping with a chisel, a coarse blanket, so folded as to fit the plate snugly, is placed over the plate. Then, by means of a pipe and hose, a stream of hot water is run over this blanket, keeping it thoroughly saturated until the plate is well heated through to the wooden backing beneath it. Next, beginning at the top, a strip of blanket about 6 inches wide is turned down and with a scraper, made of a bit of old saw blade, the accumulated amalgam, which parts easily from the plate after this heating, is rapidly and thoroughly removed. During this scraping process the hot water is still running over the blanket below, so that when the first six inches is finished the blanket is rolled down another six inches, and the process repeated until the whole surface of the plate is cleaned. This treatment is found to keep the plates in good condition. It is not advisable to let the amalgam accumulate over three months, as the plates get too valuable to be left in the mill.

At Mill 66 the dressing and cleaning are done at the same time every morning. Two men work together. The water supply of the battery is first shut off, the stamps are hung up. The splash board is removed, washed at the head of the apron plate with water through a hose, and placed at the lower end of the plate. The hose is then turned on the screen and apron plates to remove all sands that have collected there and which would scratch the plate. The plate, if normal, is clear and bright except for occasional spots, so called blisters, resulting from iron and copper salts. These are removed by a scraper in the form of a blunt double ended straight chisel. Then the two men loosen the amalgam with heavy whisk brushes, beginning at the top and working downward. When this is done, the amalgam is swept in the opposite direction and collected at the head of the apron plate. There it is brushed into the amalgam scoop with a rubber scraper (a small, sharp-edged piece of belting) and emptied into a small iron receiver. After this, the plates are brightened by brushing them with a whisk broom, using tailings moistened with a dilute solution of potassium cyanide, the men working from the head of the plate downward. If necessary, a little quicksilver is sprinkled on the plate from a bottle, over the neck of which a piece of canvas is securely tied. After being brightened, the plates are smoothed with soft paint brushes passed transversely over them, beginning at the bottom. This finishes the operation, which requires ten minutes per battery.

§ 535. At Mill 82 the dressing of the lip and apron plates is done much more frequently than the cleaning, and consequently the processes are entirely distinct. The plates are dressed every two hours with a brush, a good whitewash brush being preferred. The stamps are hung up and the plate washed with clear water, which exposes the surface. The surface, if soft, needs very little, if any, mercury. It is generally harder at the top than at the bottom, in which case a little mercury is sprinkled on. Then the plate is brushed in waves, beginning at the bottom corner and working the amalgam toward the top and inward at the same time, not omitting the smallest portion of the plate. The brush is drawn across the full width of the plate, which forms the amalgam in miniature riffles. Very little mercury is needed as a rule at the lower end of the plate. A weak solution of potassium cyanide is used when necessary.

The cleaning of the plates takes place every 24 hours. The surface of the plates is first washed. Then the amalgam is slightly softened and loosened by sprinkling a small quantity of mercury over the plate and rubbing the surface with a cloth or whisk brush, after which the amalgam is removed with a stiff rubber scraper 4 inches wide, made out of rubber belting. The use of a steel scraper is not allowed except for the removal of blisters or any fixed impurities which may occasionally be found on the plate.

In this mill the hard amalgam is allowed to build up on the plate, it having been found impossible to remove it by a steel scraper without injury to the plate, owing to the extreme hardness of the scale, and experience has further shown that more gold and silver are saved by a plate covered with this hard amalgam than by one not so covered or one that has been scraped with a steel scraper. After three or four years the plates are taken out and the amalgam on them removed. To do this, "sweating" with hot water was tried, but the only result was the salivation of the workmen while the amalgam still remained on the plate. Immersing the plates in chemical solution succeeded no better. The most efficient method was to buckle the plate by striking the back and front of it with a light hammer, a small block of wood being used to deaden and distribute the blow. This causes the amalgam to scale off, leaving only a thin film, which is subsequently removed with a chisel or scraper. The following is an average example of the yield. An apron plate 8 feet long and 54 inches wide, after having been in continual use for 3 years and 10 months, had an accumula-

tion of amalgam on it no less than 0.16 inch thick at the head end and gradually decreasing to barely 0.0625 ($\frac{1}{16}$) inch at the lower end. When removed, this amounted to 160 pounds avoirdupois. Retorting reduced this to 60.5 pounds or 38% of crude bullion and melting produced a gold bar weighing 866.1 ounces Troy, which had a total fineness of 993.9, being 431.4 fine in gold and 562.5 fine in silver. Its total standard value was $8,340.54. During the time the plate was in use, the battery crushed 14,942 tons of ore, containing about $\frac{1}{3}$ ounce of gold and 7 to 12 ounces of silver per ton of 2,000 pounds, and there were recovered from the plate 6,426 ounces of bullion, which was 541.5 fine in gold and 443.9 fine in silver. Its total standard value was $75,184.20. The removal of the hard amalgam made the plate unfit for further service, so that after every visible portion of amalgam had been removed it was cut up and melted into a bar. This bar contained 8.96 ounces gold and 9.62 ounces silver and its value was more than double the cost of a new plate.

So great an accumulation as indicated by the preceding figures, has been the cause of considerable discussion and even criticism. Its occurrence is due to the extreme hardness of the amalgam, which makes the use of a steel scraper unwise. Why the amalgam is so hard in this mill is not satisfactorily explained. In another mill, where the same trouble occurred, it was ascribed to the fact that the plates are run too "wet," that is, with too much quicksilver on them, and to the too liberal use of potassium cyanide, both of which tend to make the amalgam hard. The proof that these were the causes was that there was no such trouble when the amount of mercury and cyanide used was reduced. The hardness does not appear to be due to the presence of a large amount of silver in the ore, as experience at this mill tends to show that silver amalgam is not so stiff and hard as gold amalgam. That the hardness of the amalgam is due to the lower percentage of quicksilver that it contains, is shown by the fact that the accumulated scale contains 38% bullion, whereas amalgam from the daily cleaning never contains more than 20, and frequently not more than 10%.

The author's theory of the cause of hard amalgam is entirely mechanical. If, for any cause, the amalgam is allowed to flow on plates, only the fluid or No. 1 amalgam (see § 514), flows away, leaving behind a hard, crystalline amalgam. Anything which will tend to cause this flowing will tend to cause hard amalgam. For example: (*a*) Excessive jarring of the plates. (*b*) An excess of mercury put on the plates will start the flow, and the flow once started will continue until amalgam left is drained almost dry and becomes hard. (*c*) Cyanide of potassium will soften up plates temporarily and start the flowing the same as an excess of mercury. In Mill 82 the plates are connected directly to the battery, a large amount of mercury is used on them since the amalgamating pans catch any that is lost from the plates, and a considerable amount of cyanide is used. With all three of these causes acting, it is possible that one or more of them may be the cause of the hard amalgam.

This statement that an excess of mercury causes hard amalgam appears at first sight to conflict with that given in § 530 that amalgam can be softened up by adding more mercury. The author is satisfied that there is something in the conditions, not yet explained, which makes both statements true. The analogy of a macadamized road, which is made muddy by a little rain, but which dries up quickly to a hard surface after a pouring rain, is another case where the same cause gives opposite results owing to changed conditions.

§ 536. At Mill 77 the plates are dressed every 12 hours with a mop, using a solution of 2 ounces of potassium cyanide in 3 gallons of water. They are cleaned every 24 hours. Usually a rubber belt scraper is all that is required to remove the amalgam, but if it cakes on the plate making a hard and rough surface, a steel scraper is necessary. A little quicksilver is sprinkled over the upper

part of the plate after removing the amalgam, and finally it is mopped with the solution of potassium cyanide. With the above treatment the accumulation of amalgam occurs only slightly, if at all, in this mill. Even after 10 years of service, an apron plate 12 feet long and 54 inches wide, when scoured for several hours with tailings, hot water and quicksilver, yielded amalgam only to the value of $100. Smelting the remainder of the plate yielded about $150, or about 8 ounces of fine gold. The bullion in this mill averages 740 fine in gold and 220 in silver.

Some of the ores treated in this custom mill have a strong tendency to form hard amalgam on the plates, but this has to be removed at the end of the run, which is easily done by a steel scraper and without injury to the plates. In fact, the plate is said to be in better shape for catching gold after the hard amalgam is removed. The scrapers used are made of steel $\frac{1}{8}$ inch thick, about 3 inches wide and ground square across so as to give two right angled edges. There are plates on the bumping tables of this mill upon which amalgam accumulates which cannot be entirely removed by a steel scraper and can only be fully recovered when the table is worn out. This is another instance of extreme jar and very hard amalgam associated together.

At the Fortuna mill, Bendigo, the hard amalgam is removed from the plates every six months by acid (the kind of acid is not given). According to Rickard, this acid treatment is injurious to the plate as it robs it of its surface of gold amalgam. One clean up of eighteen plates yielded 646 ounces of amalgam giving 235 ounces and 4 pennyweights of gold.

A neat tool used by Sperry for loosening amalgam, is made from a common putty knife by cutting off about one-half of its length and grinding so as to have a slight bevel.

It frequently happens on plates which have not been properly cared for, or which have been too closely scraped, that obstinate spots will occur, which increase in size as time goes on. Such spots formed in Mill 69 by the removal of a layer of hard amalgam which exposed the copper in places. They are covered with "verdigris" while running and are surrounded by an irregular ridge of hard amalgam. They will coat over with amalgam during the dressing of the plates, but when the pulp is started again they are soon scoured to bare copper. The treatment used for them in Mill 69 is to first dress the plates with mercury, followed by a wash with dilute cyanide solution. Then spread tailings over the spot and rub vigorously with a wooden block. A little nitrate of mercury may be used to good advantage. The rubbing is continued until a smooth and uniform surface is obtained. The fine tailings used should be saved and treated in the clean up barrel. By repeating this process every time the plates are dressed, it will be found that the spread of the spots is quickly arrested and then their size gradually diminishes until after a month or two they have disappeared entirely.

For the stains which remain after scrubbing with a gunny sack and sand and rubbing in mercury with a chamois skin, Hardman uses the following procedure: The plate is thoroughly cleaned and dried, scraped with a chisel until all oxide is removed and the copper is bright. Then mercury is thoroughly rubbed in with canvas or chamois moistened with potassium cyanide. When well coated, the spots are painted over with very fine gold amalgam, prepared as previously described in § 527. This treatment will permanently eradicate the spots.

§ 537. Relative Proportions of Gold and Silver in Daily Amalgam as Compared with Hard Amalgam.—Table 337 shows that in one mill the total fineness of hard amalgam is greater than that of daily amalgam and in the other it is the reverse. The proportion of gold to silver is greater in the daily than in the hard amalgam in both mills, but this is exactly the reverse of what is found in Mill 77 and in the Cross mill (see § 538). The author is inclined to

believe that there is no rule about this matter, but that the proportions will vary with the conditions.

C. M. Fenner found that if soft gold-silver amalgam is squeezed between glass plates so as to separate a softer part which oozed out in drops from a harder part that was left, the harder part had a larger ratio of silver to gold than the softer part, and he argues that the rubber scraper practically does the same thing as the glass plates.

TABLE 337.—PROPORTIONS OF GOLD AND SILVER IN DAILY AMALGAM AND HARD AMALGAM.

	Daily Amalgam.				Hard Amalgam.			
	Fineness.			Ratio Gold to Silver.	Fineness.			Ratio Gold to Silver.
	Gold.	Silver.	Total.		Gold.	Silver.	Total.	
Mill 82	541.5	443.9	985.4	1.22	431.4	569.5	998.9	0.767
El Silencio mill	600	350	950	1.714	450	300	750	1.50

§ 538. RELATIVE PROPORTIONS OF GOLD AND SILVER ON SUCCESSIVE PLATES.—The gold is caught earlier than the silver since silver has less tendency to amalgamate than gold. The ratio of gold to silver in amalgam is therefore less the farther the amalgam is from the battery. The most complete figures to illustrate this, are those shown in Table 338, obtained by Sperry with a Tremain steam stamp at the Cross mill, Colorado. This mill has no inside plates. The apron plates, shown in Fig. 430, are all 54 inches wide and 2 feet long, except the first one which is 8 feet long. The hard amalgam was all obtained from the No. 1 apron plate. This table shows that the ratio of silver to gold increases

TABLE 338.—AMOUNT AND VALUE OF AMALGAM AT THE CROSS MILL.

Amalgam, where Obtained.	Weight of Amalgam. Mg.	Weight of Bullion. Mg.	Percent Bullion is of Amalgam.	Gold. (1,000ths)	Silver. (1,000ths)
Hard amalgam from No. 1 apron plate	5,000	1,607	32.1	840.9	159.1
Lip plates	4,000	1,310	32.8	827.7	172.3
No. 1 apron plate	(a) 1,860	413	22.2	781.2	218.8
No. 2 apron plate	4,000	525	13.1	575.2	424.8
No. 3 apron plate	2,000	307	15.3	566.6	433.4
No. 4 apron plate	2,000	260	13.0	555.8	444.2
No. 5 apron plate	3,000	426	14.0	547.5	452.5

(a) Low since the hard amalgam has been removed.

from 189: 1,000 in the hard amalgam from the first apron plate, to 826: 1,000 on the No. 5 apron plate. Observations in Mills 77 and 82 corroborate the facts indicated by the table.

Under certain conditions this law of increase in the ratio of silver to gold is more or less modified, as will be seen from Table 339. In case (*a*), the last three plates were originally plated with one ounce of silver per square foot and they had been in use about a year. In case (*b*), the plates had been in use only about six months. A comparison of (*a*) and (*b*) shows that the proportion of silver in the amalgam is higher in the latter case and indicates that the silver used in plating is gradually scraped off with the amalgam. Note that the last plate in (*a*) yields amalgam of about the same fineness in gold and silver as all the plates of (*b*). It is only after the silver plating has been largely removed that the ratio of gold to silver decreases as the distance from the mortar increases. The fact that the silver of the plates goes into the amalgam is further shown for another mill in (*c*). This is presumably a custom mill treating different kinds of ore. The runs bracketed, however, were made at the same time in adjoining batteries on similar types of ore and in a few instances, as noted, on the same

identical ore. In almost every instance the fineness in silver is higher in the amalgam from the silver plated plates than from the copper; also the amalgam from a new silver plated plate has a higher silver fineness than that from an old one. The reason for this is that there is more silver on the newly plated plate, and hence more goes into the amalgam.

§ 539. DISTRIBUTION OF AMALGAM.—The greatest amount of amalgam is generally obtained at the battery and the amount decreases as the distance from the battery increases; also since coarse gold is caught sooner than fine, it follows that more amalgam is obtained at the battery and less at the foot of the plates where the gold is coarse than where it is fine. To illustrate these statements,

TABLE 339.—RATIO OF GOLD TO SILVER IN PLATE AMALGAM.

Amalgam from	Fineness in Gold.	Fineness in Silver.	Ratio of Gold to Silver.	Remarks.
(a) Homestake Mill, Black Hills, South Dakota. Tests made in 1897.				
Inside plate	818	168	4.87 to 1	.....
Copper plate, first row	812	175	4.65 to 1	.....
Silvered plate, second row	654	331	1.97 to 1	.....
Silvered plate, third row	618	376	1.64 to 1	.....
Silvered plate, fourth row	513	465	1.10 to 1	.....
(b) Homestake Mill. Tests made in 1899.				
Silvered plate, second row	564	421	1.34 to 1	.....
Silvered plate, third row	569	422	1.35 to 1	.....
Silvered plate, fourth row	558	433	1.29 to 1	.....
(c) Reynolds Mill, White County, Georgia.				
Silver plated plate	819	141	5.81 to 1	Dec., 1898.
Silver plated plate	769	181	4.25 to 1	
Copper plate	894	99	8.98 to 1	
Silver plated plate	775	108	7.18 to 1	Jan., 1899.
Copper plate	855	*117	7.31 to 1	
Silver plated plate	790	148	5.04 to 1	Feb., 1899.
Copper plate	822	67	12.27 to 1	
Silver plated plate	639	151	4.23 to 1	Feb., 1899.
Copper plate	619	82	7.55 to 1	(Same ore)
Silver plated plate	796	107	7.46 to 1	March, 1899.
Copper plate	732	72	10.17 to 1	(Same ore.)
Silver plated plate	801	180	4.45 to 1	March, 1899.
Copper plate	770	*207	3.72 to 1	(Same ore.)
Silver plated plate	821	163	5.07 to 1	April, 1899.
Copper plate	867	127	6.82 to 1	(Same ore.)
Silver plated plate	808	188	4.30 to 1	
Silver plated plate	852	144	5.92 to 1	April, 1899.
Copper plate	†754	91	8.29 to 1	
Silver plated plate	859	117	7.34 to 1	
Copper plate	898	90	9.91 to 1	April, 1899.
Old silver plated plate	901	81	11.12 to 1	
New silver plated plate	876	108	8.11 to 1	Same ore.
Old silver plated plate	905	87	10.40 to 1	
New silver plated plate	893	101	8.84 to 1	Same ore.
Mortar	900	91	9.89 to 1	
Old silver plated plate	794	160	4.96 to 1	Same ore in adjoining batteries.
Mortar	933.5	60	15.56 to 1	
New silver plated plate	805	185	4.35 to 1	

* The copper plate was in strips, which were taken up at these runs and the under surface cleaned.
† Result modified by the addition of a little impure bullion from a previous clean up.

Table 340 has been prepared, which shows the results of two tests made at the Massachusetts Institute of Technology, using no inside plates and five outside

TABLE 340.—DISTRIBUTION OF AMALGAM.

Test No.	I.	II.	Test No.	I.	II.
Battery amalgam	$4.573	$9.1394	Fourth plate	$0.099	$0.0168
First plate	2.694	0.1389	Fifth plate	0.050	0.0065
Second plate	0.215		Mercury trap	0.088	0.0124
Third plate	0.180	0.0083			

plates, each 5½ feet long. Lot No. I. was quartz with fine gold from New Hampshire. Lot No. II. was quartz and slate with coarse gold and a small

amount of sulphurets from Nova Scotia. Another example is shown in Table 338.

As reported by the mills the amounts are as follows:

Mill 57, 67% in battery, 23% from lip and apron plates, 8% from first sluice plate and 2% from the second.

Mill 59, $\frac{2}{3}$ from battery, $\frac{1}{3}$ from plates.

Mill 61, $\frac{1}{2}$ from battery, $\frac{1}{2}$ from plates.

Mill 62, $\frac{1}{6}\frac{5}{6}$ from battery, from plates.

Mill 67, $\frac{9}{10}$ from battery, $\frac{1}{10}$ from plates.

Mill 76, when gold is fine, $\frac{1}{2}$ from battery and $\frac{1}{2}$ from plates; when coarse, $\frac{3}{4}$ from battery and $\frac{1}{4}$ from plates; of that caught outside, 49 to 75% comes from the upper 18 inches of plates.

Mill 77, $\frac{1}{3}$ each from back inside, front inside and outside plates; none from mortar sands.

Oldham mill, 68.05% from mortar sands, 23.40% from inside plates and 8.55% from outside plates.

§ 540. ABSORPTION OF AMALGAM BY COPPER PLATES.—It is claimed that copper plates absorb gold amalgam by a gradual soaking process. The scraping of the under side and obtaining gold amalgam therefrom, has been brought forward as demonstrating the fact that the gold amalgam has passed through the plate (Keith and Hardman). Further evidence is from Mills 73, 77 and 82, all of which report plates scraped down to bare copper, melted down and sold for the gold they contain (see § 533, § 535 and § 536). The porous nature of metals in the solid state may allow in some cases a very gradual penetration of the particles of one into the other. There is nothing in any of the discussions to show that the creep of amalgam around the edge and completely covering the rear side of the plate has been taken into account. To prove that the gold had penetrated the plate, the rear side should have been scraped as well as the front side before they were cut up and melted.

Mr. W. L. Libbey of North Brookfield, Nova Scotia, holds that the amalgam from his coarse Nova Scotia gold penetrates the plate but little. The author sought to ascertain the facts by testing a piece of his plate. The plate chosen had been used three years continuously in various positions as a sluice plate and for about three years preceding as an inside battery plate. It was a plain copper plate and is supposed at the start to have been either 0.187 ($\frac{3}{16}$) inch or 0.156 ($\frac{5}{32}$) inch thick. As a battery plate it had pass over it about 3,000 tons, yielding about $16 per ton, and as a sluice plate it had carried about 7,500 tons of ore, yielding about $10 per ton bullion value. While used as an inside plate, it was cleaned with a metal scraper once or twice a month, the amalgam not being sufficiently removed to show much raw copper. While used as a sluice plate, it was cleaned up with the aid of a metal scraper and brightened once a month. It had been scraped many times until patches of bare copper appeared. The size of the piece taken was about 3 inches long, $\frac{3}{4}$ inch wide, with an average thickness of 0.0888 inch. Successive layers were removed from the plate by a steel scraper, five from the top and four from the bottom surface, each scraping being kept by itself, weighed and assayed for its gold and silver contents. The part of the plate remaining was dissolved in nitric acid and also analyzed for its gold and silver contents. The average thickness removed by each scraping was determined by measuring with a micrometer gauge before and after. The top and bottom surfaces were practically all bright copper after two scrapings each. The results of the work are given in Table 341. Silver was also determined, but as the three corrections needed, namely, the silver in the copper, that in the assay lead, and the per cent. of copper in the scrapings were not all known, the results are not given.

TABLE 341.—ABSORPTION OF AMALGAM BY COPPER PLATES.

		Average Thickness of Plate. Inches.	Thickness Removed. Inches.	Weight Removed. Grams.	Gold in Scrapings.		Percent Gold is of Total Gold.
					Weight. Grams.	Percent.	
	Before scraping.....	0.0889	.....	.....	.....	.....	.....
On top.....	After first scraping..	0.0857	0.0031	0.4332	0.05138	11.86	55.3
	" second " ..	0.0833	0.0024	0.5145	0.00916	1.780	9.9
	" third " ..	0.0817	0.0016	0.5623	0.00462	0.822	5.0
	" fourth " ..	0.0802	0.0015	0.6855	0.00053	0.0773	0.6
	" fifth " ..	0.0772	0.0030	0.7225	0.00010	0.0138	0.1
On bottom...	" first " ..	0.0757	0.0015	0.6801	0.01810	2.66	19.5
	" second " ..	0.0727	0.0030	0.7148	0.00845	1.18	9.1
	" third " ..	0.0712	0.0015	0.6677	0.00046	0.0689	0.5
	" fourth " ..	0.0700	0.0012	0.4933	0.00006	0.0121	0.1
	Residue.....	.....	.....	21.4824	0.00000	0.0000	0

Absolutely no gold was found after about 0.01 inch had been removed from each surface, and over 90% of the gold obtained was recovered by removing a layer of only about 0.005 inch from each surface. This 0.005 inch also represents the thickness removed when the red color of copper had appeared practically all over both sides of the plate. The gold accumulated on the under side, presumably by creeping, to an extent almost half that of the upper side. It is a fact which may or may not be of significance, that the total yield of this plate was 0.042 grams of gold per square inch and the plates in Mills 77 and 82 when smelted, as previously described in § 535 and § 536, yielded 0.054 and 0.032 grams of gold per square inch respectively.

The results obtained in this investigation seem to prove that, for the conditions existing in this mill, there is but little absorption of gold amalgam by the copper. It may be that other mills do not agree with this and that the rate of absorption varies with varying conditions, among which are the coarseness of the gold, the treatment of the plates and the time that they have been in use.

Experiments on the rate of absorption were tried in the Standard Consolidated mill at Bodie, California, where the gold is very finely divided. Three strips of silver plated copper 1×3 inches in size were left on the aprons for varying periods, and were subjected to the same routine as the apron plates themselves. They were finally cleaned as closely as possible, all surface amalgam being removed, and their values determined. It was found that the average rate of absorption of gold per square inch of surface per day was: 3.68 milligrams during the first two days; 1.15 milligrams during the first seven days; 0.70 milligrams during the first fourteen days. This indicates that the rate of absorption decreases rapidly.

The ratio of gold to silver absorbed does not appear to follow any law. In the experiments at the Standard Consolidated mill, the metals were absorbed in the ratio of 10 to 14 parts silver to 100 parts gold, while the amalgam from regular cleaning had 75 silver to 100 gold. In Mill 82 the absorbed metals were in the ratio of 93 parts gold to 100 parts silver, while that from daily cleaning had 82 parts silver to 100 parts gold. This variation may be due to neglect to take into account the silver put on as electroplating or the silver which Lake Superior copper usually contains (.02 to .12 per cent.).

§ 541. THE EFFECT OF TEMPERATURE ON AMALGAMATION.—The amalgam on plates appears to be affected by temperature along the following lines: (1) Attraction of mercury for gold. (2) The cohesive power of mercury as shown by coalescence of its globules. (3) The consistency of the amalgam on the plate (hard or soft). (4) Percentage of gold in amalgam after squeezing. (5) The solution of salts of metals in the mill water, causing the possible deposition of metals into the amalgam and the effect of the same upon the amalgam.

Within the comparatively small range which occurs in mills, probably seldom

above 100°F. and never below 32°F., the variation in the attraction of mercury for gold is so slight as to be of little consequence.

Regarding the cohesive power of mercury, W. F. Drake states that at a low temperature this is lost to a considerable extent. This may be shown by placing two portions of broken up mercury in a cold and warm dish respectively; that in the warm dish will be found to unite very much more easily than that in the cold.

The higher the temperature the more fluid will amalgam be and the more liable to run off the plates. At the mill of the Twelve Apostles Gold Mining Co. in Transylvania, Von Dessauer notes that it is not the actual temperature whether high or low, that is injurious to amalgamation, but rather the sudden changes in temperature. By cutting down the amount of mercury fed to the battery and gauging the amount entirely by the "feel" of the plates, it is possible to have the amalgam of the same consistency in the summer as in the winter, and prevent entirely any serious flowing of amalgam. In spring and autumn, however, when the mill water was much warmer in the day time than in the night, the amalgam would flow down during the day into the traps and even beyond, and it was impossible to so regulate the mercury as to keep up with the change. He further notes that the per cent. extraction of gold from the ore in winter is scarcely different from that in summer. Sharpless reports that at the Virginia mill near Merced, California, the amalgam on silver plated copper plates began to harden up as the water became warm and the amalgam became very hard, forming a crystalline or granular alloy that could be removed only by scraper. As the water became warmer the difficulty increased, so that starting with plates saturated with mercury, after an hour the upper four feet would be as hard and dry as if no mercury had been used and mercury would be running off the lower end into the traps. Finally, with the water at 83° F. he hung up the stamps, scraped the plates, put on a layer of wood ashes, covered with cool, damp sand. After two days the plates were in normal condition. Sharpless's experience is in direct conflict with that of Von Dessauer and may possibly have been due to the use of too much mercury, which is recognized by some mill men as a cause of hard amalgam. As long as the weather was cool the amalgam remained pasty, but the advent of warm weather caused fluid mercury to separate out and run off leaving hard amalgam behind. He was troubled about the same time with a lime crust ($CaCO_3$) upon his plates. On the other hand, W. F. Drake found (name of mill not given) that by heating the battery water to 80° or 90°F. the maximum saving of gold was obtained, as shown by assays of tailings and slimes.

The effect of increased temperature is to raise the percentage of gold in solid amalgam after squeezing. Von Dessauer found in the case previously cited that with a winter temperature of 34° to 36° F., the amalgam left after squeezing out the liquid contained only 7 to 10% gold, while with a summer temperature of 80° to 90°F. it contained 25 to 35% gold. There is required, therefore, three or four times as much mercury in winter as in summer.

Regarding the solution of salts, deposition in the amalgam and effect of the same upon its consistency, J. A. Sanborn advances the theory that since the heating of water increases the solubility of certain metallic salts it may cause harmful results upon imperfectly coated copper plates. Iron from the stamp shoes may deposit in the amalgam a metal that is electronegative to iron. For example, a salt of copper, lead or perhaps arsenic would deposit some of its metal in the amalgam in the presence of iron, and this may be the cause of some of the conflicting reports that have come from some of the authorities. In the laboratory of the Massachusetts Institute of Technology, working Nova Scotia ores containing arseno-pyrite, upon plates smeared with a thick layer of silver amalgam, the amalgam retorted and melted has, in a number of instances, yielded

a very brittle alloy which gave reactions for arsenic. This is not conclusive, however, since the arsenic may have come from particles of arsenopyrite left in the cleaned amalgam. Since chemical action and solution generally increase with the temperature, it may happen that some of the scums which form on plates may cause greater trouble at a higher than a lower temperature.

The practice of the mills in this matter is here given: Mill 55 heats the water fed to the battery in winter by an exhaust steam coil in the water tank. This is done simply to prevent freezing. Mills 57 and 61 heat the water on its way to stamps by coils in stoves. The latter mill brings it up from 42° to 55°F. thereby. Mill 87 uses mine water at 50°. Mill 66 formerly did, but does not now, heat the water, as a higher yield is obtained with water at 50° than at 60° or 70°F. Occasionally a black scum was noticed with warmer water after the plate had been rubbed by the hand. Mill 77 does not heat the water, as it was found that they could amalgamate better in winter with very cold water than with warm. The amalgam is stiffer without being too rich in gold. Mills 27, 56, 62, 64, 67, 82 and 84 do not heat the water in winter. At the Brittania United mill, Ballarat, Rickard reports that the battery water is heated from 75°F. until it gives off steam, with the idea of aiding amalgamation.

Mercury Wells and Riffles Containing Mercury.

§ 542. Definitions.—These differ from amalgamated plates in that, instead of a surface covered with amalgam, there is a pool of mercury with which the pulp comes in contact by passing over it or through it, as the case may be.

It is proper at this time to define three terms, as they will be used by the author, to avoid confusion from the use of them. A mercury well is a transverse trough or box with an adjustable gate or baffle plate, which may or may not dip in a pool of mercury with which the apparatus has been charged. A riffle containing mercury is sufficiently defined by its name (see § 510). A mercury trap is any form of apparatus, whether box or riffle, which serves to catch the mercury and amalgam that runs off the plates, but does not have mercury put into it at the start.

§ 543. Mercury Wells can best be described by reference to Fig. 437, which shows a section of two wells in the mill of the South Clunes United Company, at Clunes, Victoria.

In Fig. 438, the gate is represented as dipping into the mercury with no pulp passing. As soon, however, as pulp begins to flow, it depresses the mercury on the receiving side and causes it to rise on the delivering side (see Fig. 439). Care should always be had not to dip the gate too deeply into the mercury, as a column of mercury 1 inch high on the delivering side, will sustain a column of water 13.6 inches high on the receiving side. It is easy to calculate the maximum depth that it can be immersed for any given well, and is expressed by the formula

$$d = \frac{a\,m}{12.6\ (m+n)}$$

where d is the depth immersed, a is the difference in level between the feed and overflow, m is the width of the delivering column and n is the width of the receiving column, all being in inches. Theoretically, it would seem to be best to run with the baffle board at its maximum depth in order to get as good a contact with mercury as possible. Practically, it is not possible to go to the limit on account of the danger of throwing mercury into the overflow.

The well may be made of wood or of iron. The latter is better as it tends to keep the mercury bright and is safer against leaks. Louis states that he has used wells made of stout sheet copper, which enabled the mercury to moisten the walls and prevent the accumulation of sand in the corners.

Mercury wells are practically obsolete in this country. The only instance which the author is able to cite of their use is in the Cross mill, Gunnison County, Colorado, as shown in Fig. 430. They are, however, still used to a considerable extent in Australia almost invariably in connection with amalgamated plates. Even there the tendency is to do away with them. The position which they occupy with respect to the plates and other amalgam catchers, is shown for three mills by the following outlines. The dimensions of the wells and the amounts of mercury which they contain are also given in a few instances.

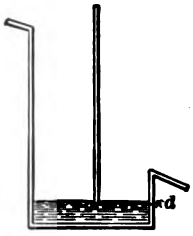

FIG. 438.

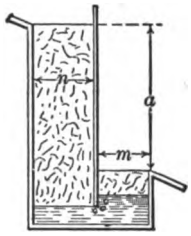

FIG. 439.

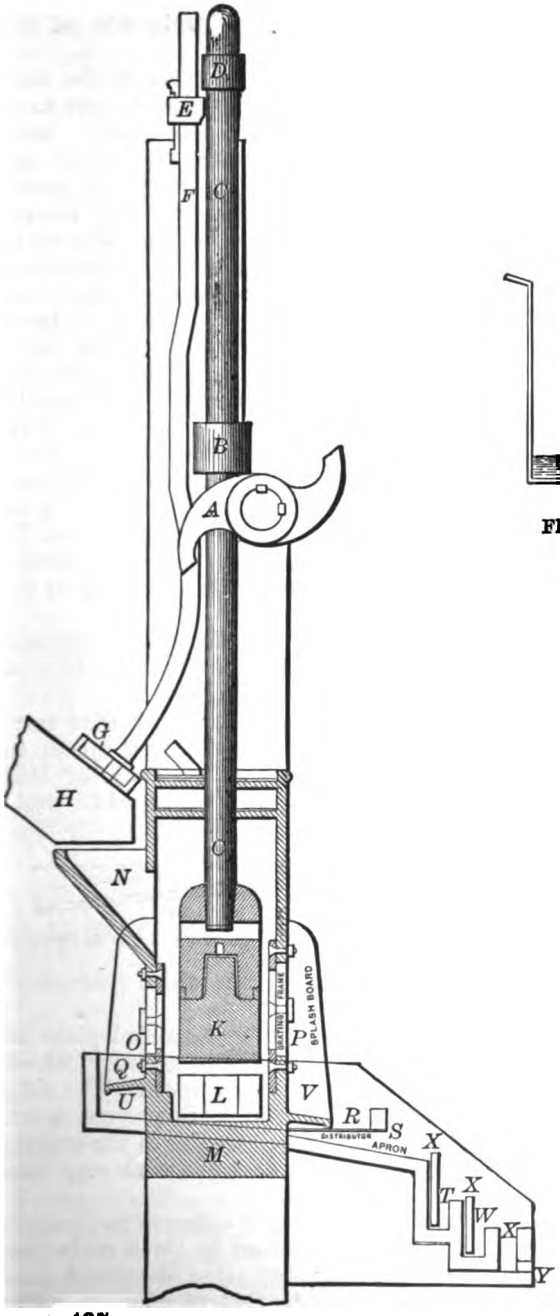

FIG. 437.—SECTION OF MORTAR AND MERCURY WELLS AT CLUNES.

So. Clunes United Co. mill, Victoria (see Fig. 437). (*a*) Mortar. (*b*) Mercury well 3 inches wide, 4 inches deep, 10 inches drop, containing 50 pounds of mercury. (*c*) Second well, like the first except it has but 8 inches drop. (*d*) Blankets. The two mercury wells yield 21.87% of the total amalgam obtained.

Old Star of the East mill, Ballarat, Australia. (*a*) Mortar. (*b*) Two mercury wells. (*c*) Plates. (*d*) Two mercury wells. (*e*) One riffle containing mercury. (*f*) Blankets. (*g*) Shaking tables.

Oriental mill, Ovens District, Victoria. (*a*) Mortar. (*b*) Plate, 3 feet long. (*c*) Mercury well, 6 inches deep. (*d*) Three plates,

each 4 feet long, the first two of which are followed by mercury wells, 4 inches deep. (*e*) Each of the four plates (*b*) and (*d*) is divided into halves by a riffle 3 inches wide and ⅜ inch deep, containing mercury. Only 2% of the total amalgam is caught by the wells and riffles. (*f*) Pans.

Where the ore contains sulphurets they accumulate on the surface of the mercury preventing contact of gold and have to be removed periodically. In the Saxon mill, which has an ore with a large amount of sulphurets, this is done by a cloth every four hours. According to Rickard, this is not often enough and every half hour would be better. The amalgam from clean free gold, which forms at the surface of the mercury, ordinarily sinks to the bottom and may be removed by the hand. Rusty gold or gold attached to pyrite often clings to the mercury at the surface and may be removed by a scraper and scoop. Generally about once a week, the contents of the well are drawn off through a plug in the bottom, which is usually made with a slight slope either toward one end or toward the middle to facilitate the draining. Sometimes there is no plug and they are cleaned out by a scoop. The amalgam is separated from the mercury by straining through chamois or cloth and the mercury put back together with what additional mercury is required to make up for that contained in the amalgam.

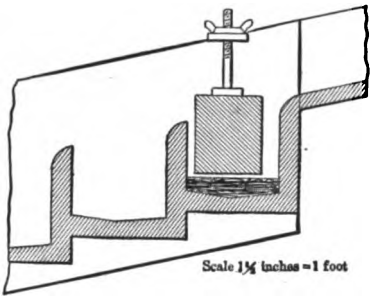

FIG. 440.—HUNGARIAN MERCURY WELLS.

A form of mercury well used in Hungary, in which the baffle plate is widened into a block, is shown in section in Fig. 440. This is done with the idea of obtaining longer contact of the pulp with the mercury.

§ 544. RIFFLES CONTAINING MERCURY.—These are simpler in form than mercury wells. They are not used to any great extent in this country, except in gravel mills and in hydraulic mining where the gold is coarse. Those of Mill 56, used in connection with plates, have already been described in § 511.

At the Mayflower drift mill amalgamated plates were discarded and were replaced by a wooden table with horizontal cross grooves 1½ inches wide, 1 inch deep and about 20 inches apart. These grooves or riffles contain mercury. They are followed by a Eureka rubber and other riffles which contain no mercury.

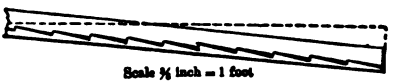

FIG. 441.—OLD GRASS VALLEY RIFFLES.

At the Magalia drift mill, the pulp first passes over an amalgamated plate 30 inches long. It then passes over five transverse riffles filled with mercury, which are two inches wide, ½ inch deep, 53 inches long and 10 inches apart. The riffle block between them is covered with sheet iron $\frac{1}{16}$ inch thick, to prevent wear. Next come Hungarian riffles and a long sluice with riffles. Owing to the coarseness of the stamping (through a ⅜-inch hole) the plate does not work very successfully, it being difficult to keep it from scouring.

In Australia the use of riffles containing mercury is very common in connection with plates and mercury wells. Their precise location in three mills has already been shown in § 543. Their form in every case is a depressed rectangular trough. Their care and cleaning is similar to that of mercury wells except that the amalgam is usually scooped out instead of being drained off.

It is possible to put mercury into almost any kind of riffles such as those previously described in § 511. In hydraulic mines the fine gravel sometimes flows

over an inclined table in which are a large number of small circular holes filled with mercury.

At Grass Valley, riffles containing mercury of the form shown in Fig. 441, were formerly used. These riffles were six inches apart and ⅛ to ¾ inch deep at the lower end. The mercury covers a width of 2 or 3 inches in each riffle.

§ 545. ADVANTAGES AND DISADVANTAGES OF MERCURY WELLS AND RIFFLES CONTAINING MERCURY.—These pieces of apparatus require less attention than plates, their first cost is less than one-half as great as plates and harmful minerals in many instances do less injury, owing to the absence of copper. For coarse free gold, containing a very small amount of sulphurets, such as occurred at Clunes in Australia, they are fully equal, if not superior, to plates. Thus with an ore containing only 3½% of sulphurets, the old Star of the East mill, previously given in § 543, is said to catch more gold than the new mill, which omits the two wells preceding the plates.

Their application is limited to a few ores, for when the sulphurets are present in any considerable amount, they quickly form a scum over the surface. At the Oriental mill, previously given in § 543, they yield only 2% of the total amalgam. If they are placed next to the mortar there is no way of telling whether the right amount of mercury is being fed to the battery. In this position they are more liable to be subject to theft, as amalgam can easily be removed without any evidence of its removal being left; the contrary is true with plates. For this reason, wells are covered over in some mills by a grating which is kept locked.

Wells and riffles require more water to keep them clear than do plates. The use of a larger amount of mercury is required than on plates and the high catching power of the rich amalgam which forms on plates is not available. There is more danger that contact of gold with mercury will not be brought about so effectually in the case of wells and riffles, as coatings of air or water on the pulp cause more trouble than on plates.

Some authorities claim that in practice the column of mercury is very soon thrown out and the amount of contact is not much over the width of the baffle board and not equal to a plate 6 inches long. It appears then that the total surface of exposure of gold to mercury is much less with wells than with plates.

MERCURY TRAPS.

§ 546. GENERAL.—These are pockets designed to catch amalgam and floured mercury that has drained off the plates. Incidentally, the traps always catch some heavy sulphurets. Although traps do not have mercury put in them, yet the mercury soon accumulates, making them partake somewhat of the nature of mercury wells.

The position which traps occupy with reference to the plates, may be seen by reference to Table 330 or Chapter XX. containing the outlines of mills. There are four positions in which they are found in various mills: (1) at the end of the amalgamated plates, (2) at the end of each section of plates, (3) on the vanner distributors, (4) in the final tail launder of the mill. Their importance is often underestimated. The original cost of them is not large and the expense of running is practically nothing, so that whatever they save, even though it be small, is practically net gain. Mill 67 by putting in the No. 3 trap in the tail launder of the mill, which cost about $3 to make, was able to recover $13 of gold every six months which would otherwise have been lost. There will always be some loss of floured mercury, however, and consequently of gold.

The best form of mercury trap is the one which will catch the maximum amount of mercury and the minimum amount of sand and sulphurets. The pack-

ing of sand and sulphurets in the bottom of a trap, however, is not as harmful as would seem at first sight, for mercury has the power of settling down and replacing the sand and sulphurets which are lighter than it, and in a like manner heavy sulphurets can replace lighter sulphurets and sand.

The mercury traps used in the mills may be divided into three classes:

(1) Plain transverse riffles.
(2) Transverse traps with a gate like a mercury well.
(3) Box traps of various types.

TABLE 342.—PLAIN TRANSVERSE TROUGHS OR RIFFLES.

Mill No.	Trap No.	Length.	Width.	Depth.	Holes in Overflow.			Mill No.	Trap No.	Length.	Width.	Depth.	Holes in Overflow.		
					Number.	Diameter	Height Above Bottom.						Number.	Diameter	Height Above Bottom.
		In.	In.	In.		Inches.	Inches.			In.	In.	In.		Inches.	Inches.
57	1	52	3	3	20	¾	.....	71	1	46	4	2	4	2½	.....
58	1	54	3	⅛	None.	.....	.....	71	2	46	⅝	⅝	None.	.....	.....
58	2	(a)	3	1	None.	.....	.....	72	1	48	4	4	24	¾	2
59	1	50	2	3	20	¾	2	b 73	2	52	1	1	None.	.....	.....
62	1	.....	.....	.....	6	.....	.....	75	1	....	1	1	None.	.....	.....
63	1	.....	.....	.....	.....	¾	.....	76	1	....	4	1	None.	.....	.....
64	1	48	4	6	8	.....	3	b 84	1	10	1	2	None.	.....	.....

(a) This trap narrows the stream from 54 inches to 46 inches in four batteries and to 29 inches in the other four batteries. (b) In these mills there are several riffles in series; in the other mills there is only one.

§ 547. PLAIN TRANSVERSE TROUGHS OR RIFFLES.—The dimensions of them as found in the mills are given in Table 342. In every case they are rectangular in section. In Mills 57, 59, 62, 63, 64, 71 and 72 the transverse troughs are also utilized as distributors and have several holes in the front side through which the pulp passes out and at a lower level than it entered. Mill 71 covers these holes with a 12-mesh screen at the time of clean up, to keep coarse stuff off the plates. At the Golden Star mill, South Dakota, shallow troughs or riffles were preferred to deep box traps, as the pulp flows more smoothly over them and there is less agitation, so there is more opportunity for settling and better work is done.

FIG. 442.—RIFFLES.

Riffles have already been discussed in § 510, § 511 and § 544. A form of riffle recommended by Adams to be put in the launder leading from the plates is shown in Fig. 442. The riffles are ½ inch deep and 6 feet apart.

These troughs and riffles should not be made too deep or too wide, as the sand then packs down in the bottom of them and reduces the acting size. This may be partly remedied by keeping them stirred up either by having the pulp make a drop into them or by making them of a form like Fig. 442 instead of rectangu-

TABLE 343.—TRANSVERSE TRAPS WITH GATES IN THEM.

Mill No.	Trap No.	Length.	Width.	Height of Descending Column.	Height of Ascending Column.	Height of Gate Above Bottom.
		Inches.	Inches.	Inches.	Inches.	Inches.
59	2	.....	9	9	.....	.....
64	2	36	4	11	9	1
64	3	15	4	9	7	1
65	1	48	8	6	2	.....
71	3	20⅛	.....	3⅛	2¼	1¼
72	2	48	5	4	.....	1½
72	3, 4, 5	23	6	.....	(a)	(a)
72	6, 7, 8	72	8	20	8	8
73	1	52	6	6	2	.....

a) In these traps the overflow is 1 inch below the inlet and the gate dips 2 inches below the level of the outlet.

lar. The riffle block should not be so narrow that the current does not have a chance to become quiet. When well constructed, riffles are claimed to be as effective as any other form of mercury trap.

§ 548. Transverse Traps with Gates.—The dimensions of these are given in Table 343 and those of Mill 64 are also shown in Figs. 425*a* and 425*b*. They are rectangular in section and are much like the plain transverse troughs except that they are generally both wider and deeper and the gate makes it necessary that the overflow be lower than the inlet, although not as low as in the case of mercury wells. In Mill 72 in the No. 3, 4 and 5 traps, the box is 23×6 inches, while the rising current is 23×1½ inches in horizontal section. In Mill 64 the traps are 36×4 inches and 15×4 inches respectively, and the rising currents are 36×2 inches and 15×2 inches respectively, while the descending currents are 36×1 inches and 15×1 inches respectively. In Mills 65 and 73 these traps also act as distributors, having a row of holes through which the pulp overflows. In the latter mill, the gate instead of being vertical is inclined upward and away from the feed at an angle of about 45°.

These forms of traps, like the riffles, have a tendency for the corners and even the whole bottom to pack with sand, especially if they are made too large or the gate is too high.

Mills 70 and 85 have traps which come in this class. They are 5 inches wide, 4 inches long and 2 feet deep at inlet, 16½ inches at outlet and have a deep gate and are much like a Rittinger *spitzlutte* for slimes (see § 319), except that they have no spigot below.

§ 549. Box Traps.—There are several designs of these, varying from a plain settling box to a hydraulic classifier. Mill 71 has a trap which is simply a box 8 inches square and 12 inches deep. In Mill 67 the No. 3 trap is a plain box, 20 inches long, 16 inches wide and 20 inches deep. In Mill 88 a spout 4 inches square leads from the plates to No. 1 mercury trap, which is a plain cast iron box 8 inches long, 7¾ inches wide and 2½ inches deep. Two batteries have also a No. 2 trap following No. 1, which is in the form of a transverse box 30 inches long, 9 inches wide and 6 inches deep. The inlet is over the middle of one long side; the outlets are 3 inches from either end on the opposite side and are 4 inches wide and 2½ inches deep.

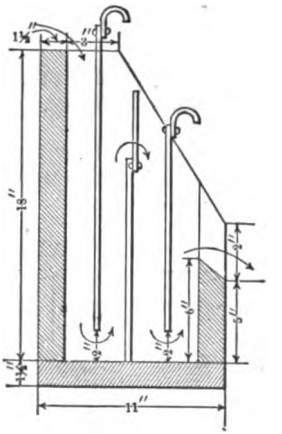

FIG. 443.—CROSS SECTION OF A BLACK HILLS TRAP.

The Black Hills trap, shown in Fig. 443, consists of two adjustable gates and one dam, all of wrought iron and sliding in grooves, in a rectangular wooden box. The pulp enters the box at the feed end, passes down under the first gate, up over the dam, down under the second gate and finally up over the overflow, which is considerably below the level of the feed. The dimensions of them are shown in Table 344. In Mill 66 the No. 2 trap has four gates and three dams.

TABLE 344.—DIMENSIONS OF BLACK HILLS TRAPS.

Authority or Mill Number.	Trap No.	Length.	Width.	Depth.	Distance Between Partitions.	Height Above Bottom.		Depth Below Top.	
						Of First Gate.	Of Second Gate.	Of Dam.	Of Overflow.
		Inches.	Inches.	Inches.	Inches.	Inches.	Inches.	Inches.	Inches.
66 (*a*)	1	17	14	24	2¼	3	3	.....	6
67	2	12	16	18	3	3	4	3	4
Adams	.....	10	8	18	2	2	2	6½	12

(*a*) This box is lined with copper.

The trap is 48 inches long, 14 inches wide and 48 inches deep. The gates are all 3 inches above the bottom. The dams are 1½, 3 and 4 inches respectively below the top and the overflow is 6 inches below the top. In cleaning Black Hills traps, the gates and dams are all taken out.

The Grass Valley trap is shown in Fig. 444. It consists of an iron hopper-shaped box with the upper part of its sides vertical. It has an inlet pipe extending nearly to the bottom, an overflow pipe near the top, and a plug in the bottom for draining off the sand and amalgam at the time of clean up. The figure also shows a block of wood fastened to the outgoing side of the trap. Five mills, 57, 58, 67, 77 and 86 used this form of trap. The dimensions obtained are shown in Table 345.

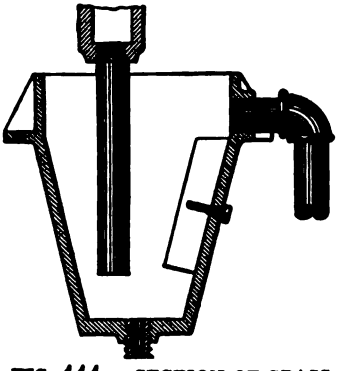

FIG. 444.—SECTION OF GRASS VALLEY TRAP.

At the Cross mill, Sperry found with an ore containing a large amount of heavy oxides (sometimes 60 or 70%) that ordinary forms of traps could not be used. A form of hydraulic classifier shown in Fig. 445 was adopted. The pulp comes in over the copper plate, and is forced to pass downward by the baffle plate *C* when it is subjected to the action of a rising current of water from the hydraulic *A*. The mercury, amalgam and heaviest sulphurets settle down through *D*, from whence they are removed periodically by the pipe *E*. Outside the mill the pulp passed through a continuous working clean up pan, which served as a mercury trap.

TABLE 345.—GRASS VALLEY MERCURY TRAPS.

Mill No.	Trap No.	Size at Top.	Size at Bottom.	Total Depth.	Depth of Vertical Sides.	Diameter of Inlet Pipe.	Dip of Inlet Pipe.	Number of Overflow Pipes.	Diameter of Overflow Pipes.	Depth to Center of Overflow Pipe.	Diameter of Plug
		Inches.	Inches.	Inches.	Inches.	Inches.			Inches.	Inches.	Inches.
57	2&3	14x14	5¾x5¾	18¼	3¼	2	(a)	2 or 1	2 or 2¼	.....	¾
58	3	14x14	.....	22	6	3	(b)	2	2	3	.....
67 *c*	1	14x14	6x6	12	.....	2	(d)	1	2	4	¾

(*a*) To 2 inches above bottom. (*b*) Just below surface. In this trap the sand packs in the bottom and forms a true conical hopper 9 inches in diameter. (*c*) This trap has a gate or baffle plate in it parallel to and 4 inches from the discharge side and reaching to within 3 inches of the bottom. (*d*) Half way to bottom.

Preston advocates the use of shaking traps to prevent sand from packing and to settle the mercury better.

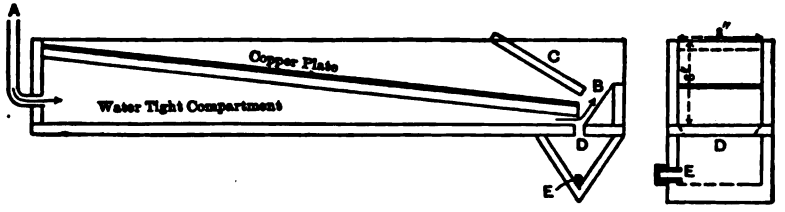

FIG. 445.—LONGITUDINAL AND CROSS SECTIONS OF SPERRY'S TRAP.

§ 550. CLEANING UP MERCURY TRAPS.—As a rule this comes at the time of the periodical clean up of the mills, which has been already described (see § 184) and the treatment of the contents of the traps is similar to that of the battery sands. The interval of cleaning may vary however. The Saxon Mill in Australia cleans out its riffles, which serve as traps, every hour. On the other hand, the No. 3 trap

of Mill 67 which is outside the mill, is cleaned but twice a year. The method at Mill 73 is as follows: Every two weeks when the No. 2 sluice plates of this mill are dressed and cleaned (see § 533), the top of No. 1 trap is taken off and the sulphurets and quicksilver scooped out to a bucket. The No. 2 traps or riffles are also cleaned out with a small scraper into the bucket. The contents of the bucket, along with the other products of the clean up, go to the clean up barrel. Mill 66 cleans out the traps every month, and sends the entire contents to a clean up pan. The No. 1 traps of the mill yield 80 ounces of amalgam and 144 ounces mercury per month, while the No. 2 traps yield 10 to 12 ounces of amalgam and 40 ounces of mercury.

AMALGAMATORS.

§ 551. This name is given to various machines, which do no crushing, but simply amalgamate by bringing gold into contact with mercury by some mechanical means, as pressure, agitation or scouring. They are but little used in this country, since the work of brightening and amalgamating the gold is well done by the stamp mill. A great many designs have been invented but, for the most part, they have been discarded, either from their complication, difficulty of cleaning, or some other defect. Brief mention will be made of a few of the leading types which have at some time met with success.

§ 552. THE ATWOOD AMALGAMATOR.—This formerly had an extensive use in California, and is occasionally used to-day. As shown in Figs. 446*a* and 446*b*, it

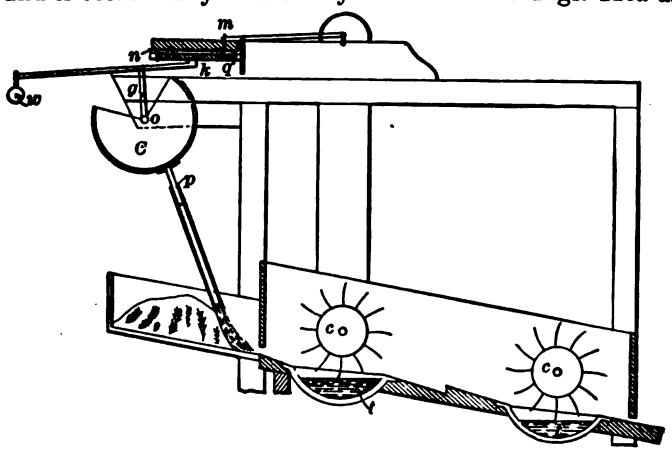

FIG. 446*a*.—ELEVATION OF THE ATWOOD AMALGAMATOR.

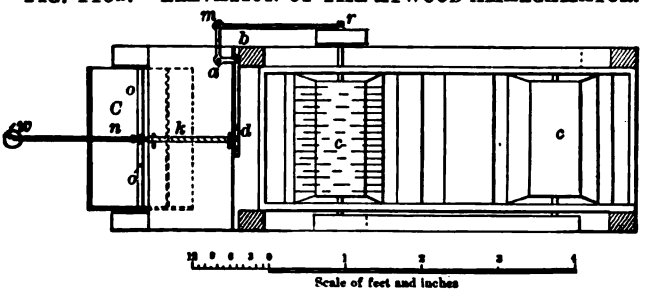

FIG. 446*b*.—PLAN.

consists of two transverse cylindrical troughs *tt*, 17 inches long and 4 or 5 inches deep. Two wooden cylinders *cc* have radial arms of ¼-inch round iron, the ends

of which are slightly curved. The arms are set along the cylinders in 12 longitudinal rows containing alternately 8 and 9 arms. These arms almost touch the quicksilver without dipping into it. In some of the machines these arms dip into the mercury and force all the sand below the surface. The cylinders are 2 feet 10 inches apart center to center, and their difference in level is 6 inches. Small belts revolve them at the rate of 60 revolutions per minute. An automatic feeder, with the help of a stream of warm water, causes the pulp to pass down across the troughs. Formerly at Grass Valley, the pulp from the stamps passed over blanket tables, and the gold and sulphurets caught there were treated by the Atwood amalgamator at the rate of 3 tons in 24 hours, using 1 cubic foot of water per minute. The agitation from the arms helps to bring the pulp in contact with the mercury. Particles of bright gold are easily caught and sink to the bottom, while

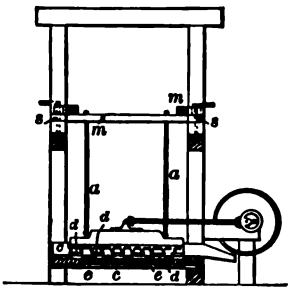

FIG. 447*a*. — ELEVATION OF EUREKA RUBBER.

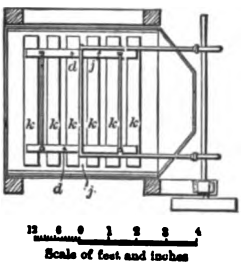

FIG. 447*b*.—PLAN.

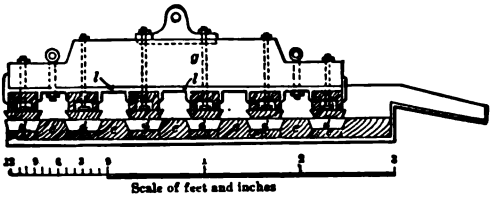

FIG. 447*c*.—ENLARGED SECTION OF RUBBING PARTS.

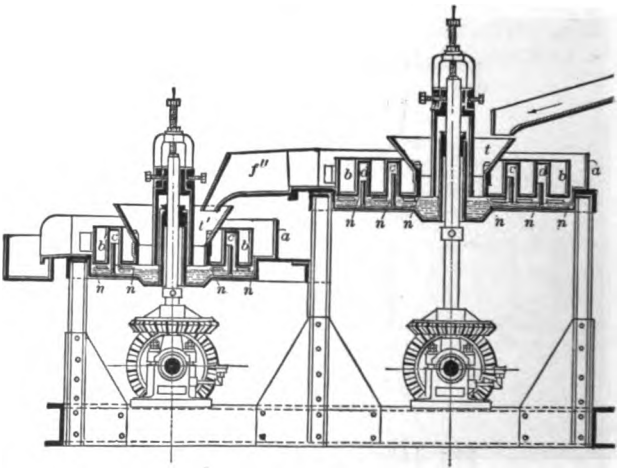

FIG. 448.—SECTION OF THE LASZLO AMALGAMATOR.

particles of rusty gold or gold attached to quartz, with only a portion of the surface brightened, are caught and held by the bright corner and float on the surface of the mercury. These floating grains were skimmed off at intervals and treated in Knox amalgamating pans. Once a week the amalgam was taken out and strained through cloth or chamois.

§ 553. THE EUREKA RUBBER.—This is another early California device which is still met with. It consists (see Figs. 447*a*, 447*b* and 447*c*) of a rectangular cast iron box, 7 inches deep, and 4 feet 8 inches square, in the bottom of which are cast iron dies or plates, over which cast iron shoes, attached to a frame, have a rectilinear motion. The cast iron dies *dd*, 1½ inches thick, are mounted on wooden boards *c c c*, the spaces between being filled with wooden blocks *e e*. The cast iron shoes are fastened to wooden backings, which are bolted to two timbers *g g*. The

wooden backings of the shoes have amalgamated plates attached to them. The shoe frame receives a backward and forward horizontal movement of 4 inches from an eccentric making 55 revolutions per minute. The shoe frame is suspended from a wooden frame *m m*, the height of which is adjustable. This machine was formerly used at Grass Valley to treat the tailings from the blanket tables and the Atwood amalgamator previously mentioned. It treated between 11 and 12 tons in 24 hours. Its action is to brighten any particles of gold and enable them to be caught on its amalgamated plates. A Eureka rubber was formerly used at the Father de Smet mill, South Dakota, between the upper and lower plates. It was given up, however, on account of the cost of running and the small amount which it saved. One battery gave too much pulp for it to treat.

THE GOLD KING AMALGAMATOR, used in 1895 at Mill 72, but since taken out, consisted of a slightly inclined revolving cylinder with radial fins inside covered by amalgamated plates. The pulp was fed at the upper end and discharged at the lower.

§ 554. THE LASZLO AMALGAMATOR, which is used to a considerable extent in Transylvania, where crushing and amalgamation are done separately, is shown in Fig. 448. It consists of a cast iron pan *a*, with mercury in the bottom, in which rotates a cast iron muller *b*. In the bottom of the pan are stationary rings *c* and *d*, which extend upward into corresponding recesses in the revolving muller. The pulp enters the hopper *t*, passes down and then up over the ring *c*, after which it again goes down and then up over the ring *d*, down again and out over the spout *f'* to a second pan, where its course is similar to that in the first pan. Teeth *n* attached to the lower portion of the muller serve to bring the pulp into contact with the mercury. Each pair of pans treats an average of 2 tons of stamped ore in 24 hours. The amalgam is cleaned out at intervals of from 10 to 30 days.

AMALGAMATING PANS which are by far the most important amalgamators, particularly for silver ores, have been already described (see § 206), since they are designed to do grinding if desired.

§ 555. SETTLERS.—These are used in silver mills to receive the charge from amalgamating pans and separate or settle the amalgam which it contains. Their construction and action is very similar to amalgamating pans except that they are made larger, usually 8 feet diameter instead of 5 feet, as is the case with the pan, and since they do no grinding there are no dies and the shoes do not touch the bottom. They also have a series of plugs, usually three, at various levels in the sides. The dimensions of the settlers in the mills are shown in Table 346. Fig. 449 shows Fraser & Chalmers' combination 8-foot settler.

TABLE 346.—SETTLERS.

Mill No.	Diameter.	Depth.		No. of Revolutions per Minute.	Time for Settling One Charge.
	Feet.	Feet.	Inches.		Hours.
82	8	3	2	16	2
83	8	4	0	13	4
84	8	3	6	15	3

The shoes are either of wood or of iron set at an angle to produce a current and are attached to the muller, which may be either a circular ring, as in pans, or simply four arms. The bottoms of settlers generally slope toward the periphery, and there is a groove in the bottom around the margin which deepens toward one point, where there is a connection with an amalgam well or bowl outside. The mercury runs out and accumulates in the bowl, whence it is removed by a plug or by dipping it out.

All three of the mills of Table 346 contain one-half as many settlers as there are amalgamating pans, and the time of treatment in settlers is consequently one-half

as long as in the pans. The routine in Mill 83 will serve as an illustration of the use of settlers. This mill has 24 pans and 12 settlers, as shown in Fig. 450. The odd pans are charged every 8 hours, and the even pans at equal intervals between. Every four hours either the 12 odd or the 12 even pans are discharged to the settlers. The muller of the settler is kept revolving continuously. The pan

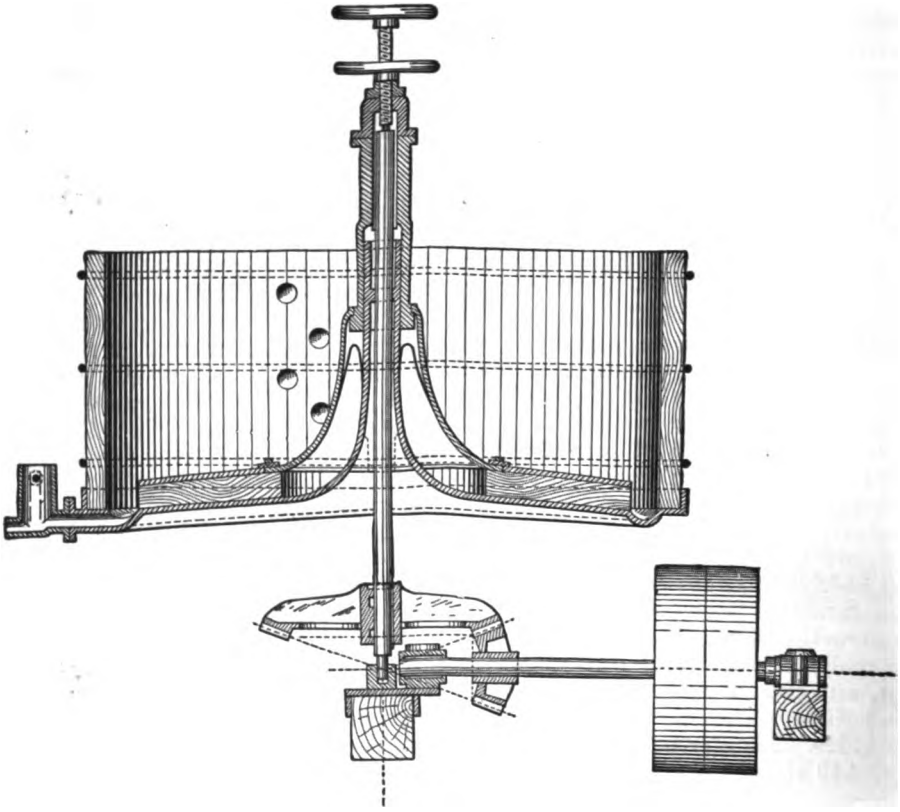

FIG. 449.—SECTION OF SETTLER.

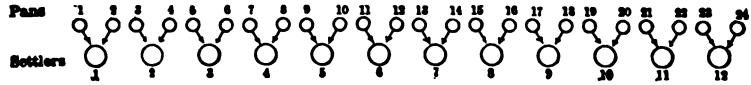

FIG. 450.—SKETCH OF PANS AND SETTLERS IN MILL 83.

charge is hosed out and run into the settler with sufficient cold water to fill the latter. This dilutes the pulp and allows the amalgam to settle. The consistency of the mass must be such that the sand is kept in suspension while the amalgam settles to the bottom. The speed of the muller may help or hinder this, as the higher the speed the harder it is for the mercury to collect together and settle. It should be noted that the speed of revolution is much lower than in pans, never

being over 20 per minute even for coarse sand. After the muller has been revolving 2½ hours the hose over the settlers is turned on, causing them to overflow from a little spout at one side. This water is best added as a spray, which not only avoids stirring up the pulp, but helps the settling. Thirty minutes later the top or No. 1 plug is opened; twenty minutes after this, No. 2, and twenty minutes later, No. 3 plug. After running from No. 3 plug for 20 minutes the hose is shut off and the charge from the alternate pan is run in. This makes the total time of treating a charge in settlers as 4 hours. Some coarse heavy sand, un-

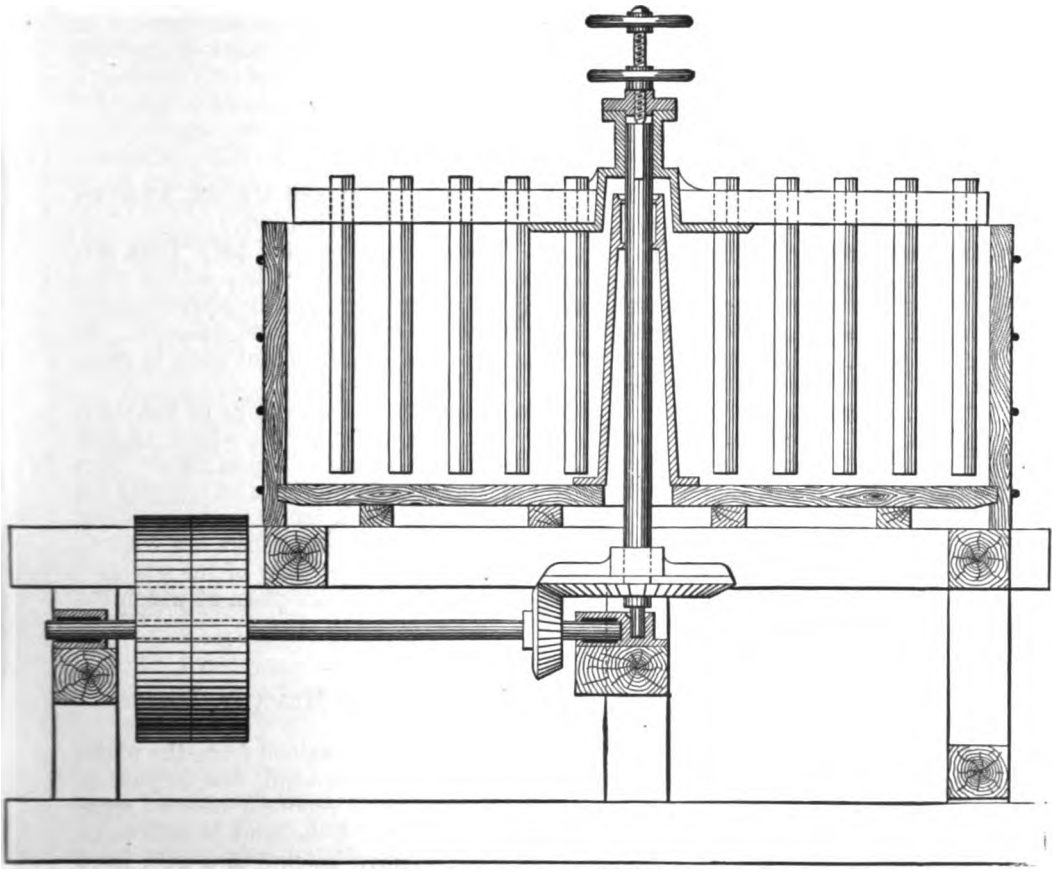

FIG. 451.—SECTION OF AGITATOR.

ground sulphurets, amalgam, mercury and iron accumulate in the bottom, so that settlers are cleaned out periodically and the products may be reworked in pans.

In designing mills Fraser & Chalmers rate settlers as requiring 5 horse power.

Settlers yield amalgam and tailings which overflow either to agitators or else go directly to waste.

In the Boss system of pan amalgamation, the pulp from the pans runs continuously through the settlers and it requires but little dilution. To cool the pulp

there is a spiral pipe around the inside of the settler through which cold water circulates.

§ 556. AGITATORS.—These are used in some mills to follow settlers and act as a guard for them. They also catch the drainings of the mill floors. They are in the form of broad shallow wooden pans, in which are vertical stirrers suspended from the horizontal arms of a revolving muller. The Fraser & Chalmers agitator is shown in Fig. 451. The dimensions of them in the mills are given in Table 347.

TABLE 347.—AGITATORS.

Mill No.	Diameter. Feet.	Depth. Feet.	No. of Revolutions per Minute.
82	12	2½	18
83	8	4	25
84	8	4	25

Mill 82 has 5 agitators for 12 settlers, Mill 83, 4 for 12, and Mill 84, 2 for 10. The speed of revolution is low and varies inversely as the diameter.

Agitators are furnished with a constant stream of water, the pulp from settlers being fed and discharged as overflow at the same time. They collect some coarse sand, a little mercury, amalgam, sulphurets and iron, but the amount saved is small. The accumulations are generally shoveled out about once a month. In Mill 82 they are cleaned out every 12 hours, and the cleanings sent back to pans. The tailings which overflow from agitators are generally waste.

§ 557. A WHEEL AGITATOR is used in Mill 82 to treat the tailings of the regular agitators. It consists of a tank in which a cylindrical paddle wheel, 12 feet in diameter, is driven by a belt at the rate of 13 revolutions per minute. This agitates the sand and allows mercury and amalgam to settle. It also elevates the water and sand in six buckets on each side of the wheel sufficiently to remove them from the tank and allow them to flow to the pond. These buckets are 6×6×3 inches in size and are placed at some distance inside the periphery of the wheel.

There are various other amalgamating devices, for the description of which the reader is referred to works on metallurgy.

CLEANING AMALGAM, RETORTING, MELTING, CARE OF MERCURY, LOSSES.

§ 558. CLEANING AMALGAM.—The amalgam which is obtained from the plates and the mortar, is more or less dirty from the presence of sand, fine sulphurets or iron and base metal amalgam. The plate amalgam is generally cleaned separately from the battery amalgam, but the procedure is much the same in both cases. The sand and iron may be removed by washing in small batches in a gold hand pan, and the removal of fine sulphurets and base metal amalgam may be done by repeated grinding in either a Wedgewood or a muller mortar, with an addition of quicksilver and warm water, which brings them to the surface, whence they are skimmed off. Pouring from one dish to another will cause impurities to rise. Instead of by gold pans and mortars, the amalgam is frequently cleaned mechanically in a clean up barrel or a clean up pan, as described in § 217 and § 228, and the skimmings may be re-ground and finally cleaned with a little cyanide of potassium, or where mostly base metal amalgam, they may be retorted separately and the residue melted repeatedly with nitre and borax to get a gold button.

At Mill 71 the sulphurets, which are separated from the plate amalgam, are roasted in a small furnace and then smelted with fluxes in a crucible.

The sulphurets which are separated from the daily amalgam in Mill 73 are often worth $10.00 per pound, and therefore allowed to accumulate, and at the end of the month are treated by themselves in the clean up barrel with quicksilver. The skimmings from all amalgam from the clean up barrel are comparatively clean and are retorted and melted into a separate bar which is of low grade.

§ 559. SQUEEZING AMALGAM.—The cleaned amalgam is next squeezed through buckskin, chamois skin, closely woven drilling or fine canvas (cotton duck), all of which may or may not have been thoroughly wetted with water. The cloth or leather is laid over a vessel and the amalgam put in the center. The squeezing is done by gathering up the free ends and twisting, generally under cold water, so as to compress the amalgam and at the same time squeezing it with the hand. Mechanical squeezers have been invented but are not generally used. The Alaska Treadwell Co., however, which has a very large stamp mill, has recently installed a hydraulic amalgam squeezer which seems applicable there, owing to the magnitude of the operation. To save the labor of squeezing a large amount of amalgam, Mill 66 first strains it through a regular strainer as used in silver mills, which is a conical canvas bag suspended from a ring. The amalgam that fails to pass through the strainer is squeezed in the regular way. The mercury squeezed out is No. 1 amalgam, as previously stated in § 514, and is used over again. The amount of gold and silver in it is independent of the pressure used. Louis has shown, however, that the amount is greater at the beginning and end than at the middle of the squeezing and greater at the end than at the beginning. He also shows that the amount is greater the higher the temperature of squeezing. In one case the liquid squeezed out at 17°C. contained 0.57 parts gold in a thousand, while that squeezed out at 51°C. contained 1.73 parts; another case gave 0.46 parts at 18°C. and 1.10 parts at 72°C.

The practice of hot straining at or near 212°F., formerly used to some extent for the separation of lead amalgam, has now been generally given up since it led to considerable loss of quicksilver and to the salivation of the men.[105] Louis Janin, Jr.,* reports that the method is most successful, but has been given up simply because ores containing so much lead (15 to 30%) are now shipped and smelted instead of being amalgamated. Some of the mills now use warm water at about 100°F., but this is simply to make the amalgam more liquid and enable more of the mercury to be squeezed out.

§ 560. RETORTING AMALGAM.—Retorts are of cast iron and are of two kinds: (1) the cylindrical retort which is mounted horizontally in a fixed position in a furnace and is shown in Fig. 452, and (2) the pot retorts of various sizes, which are usually smaller than the cylindrical form and have no fixed furnace but are temporarily set into a pot furnace or over a blacksmith's forge or simply have a fire built beneath them. A pot retort is shown in Fig. 453. Both forms have a delivery pipe which leads to a Liebig condenser. A cover or a door is provided which can be luted on tight. Retorts are smooth inside and in pot retorts before putting in amalgam, to prevent sticking, the inside walls should be coated with chalk or whitening or a thin paste of ground fire clay and graphite. Paper is sometimes used, which chars and makes a coating. Mill 73 has found a paste of good oak ashes, finer than 40 mesh and free from dirt, to be the best material for luting, as there is no shrinkage. Cylindrical retorts have semi-cylindrical trays in them in which the amalgam is placed, while in pot retorts the amalgam is placed directly into the retort and left loose or rammed down by a rod having a nut on the end, so that the retort is not over three-fourths full. It is well to make a vent hole for the mercury vapor down the center. Louis recommends that a disc of asbestos board be placed on the amalgam to prevent spirting. After the amal-

* Private communication.

gam is all in and the retort tightly sealed, the fire is started and the retort gradually heated. Care should be had to apply only a moderate heat at first, just enough to cause the mercury to distil over gently. Too high a heat at the start will cause more mercury to be retained in the end. The mercury vapor passes over, is condensed and discharged into a vessel of water. The discharge pipe should dip but slightly into the water in order that there may be no danger of an explosion from water being sucked back if the retort cools. To avoid dipping the pipe into the water a gunny sack extension to the pipe may dip in the water and will at the same time prevent both explosion and salivation of attendant. At the end, when the mercury has ceased to come over, the heat should be raised to redness for a few minutes to drive off as much mercury as possible, and then the retort left to cool before being opened. The residue usually separates easily from the retort or, if not, a chisel and hammer are necessary. A few of the details of retorting and of the retorts as found in the mills, are given in Table 348.

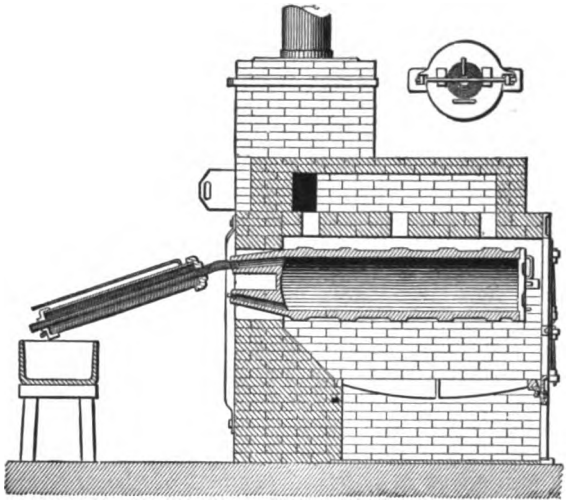

FIG. 452.—SECTION OF CYLINDRICAL RETORT AND FURNACE.

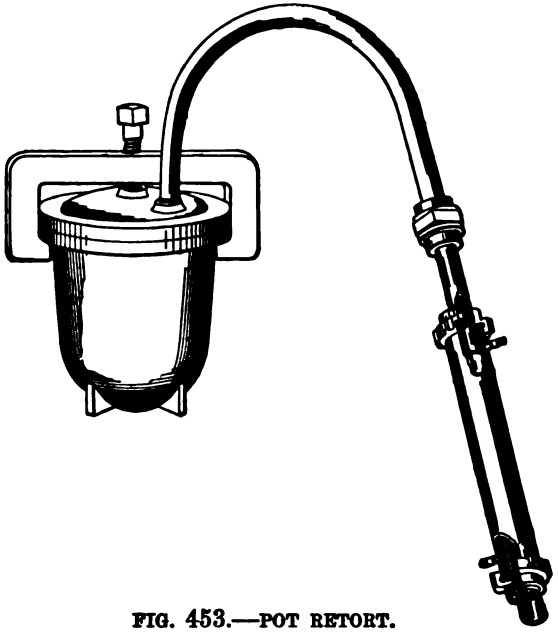

FIG. 453.—POT RETORT.

Wood is the best fuel. The amount required in Mill 66 is about ¼ cord per charge; at the Harshaw mill one cord of oak retorted 7 or 8 charges of 800 pounds each. Retorts are not long lived. If the last 1 or 1½% of mercury is to be driven off, a white heat is necessary, which melts part of the bullion and at the same time causes the iron to become bent and burnt out. Cylindrical retorts should be made so as to be turned from time to time to expose new surfaces to the fire, and should be well supported to prolong their life. Warping and burning of the iron also occur where a cherry red temperature is used so that in a silver mill, with con-

stant use, J. M. Adams was able to make a retort last only 1½ years, although the best of care was given to it.

TABLE 348.—RETORTS.

Abbreviations.—Ft.=Feet; In.=Inches; No.=Number.

Mill No.	Kind of Retort.	Length. Ft.	Length. In.	Diameter. Inches.	Weight of Charge. Pounds.	How Often Run. Days.	Time for Retorting Hours.
57	Cylindrical	3	0	10			
58	Pot					14	4 or 5
61	Cylindrical	2	4	10		30	3 to 5
62	Cylindrical	1	5	9		30	
66	Cylindrical	3	0	12	(a) 500		6
67	Pot				200	30	
68	Cylindrical				1,500	14	6
72	Cylindrical	6	0	16		30	6
83	Cylindrical				1,000	(b) 14	(c) 8
84	Cylindrical	5	0	14	1,500	14	6 to 8

(a) It can take 1,000 pounds. (b) There are several charges at this time from the clean up. It is also run at other times whenever 1,000 pounds of amalgam have accumulated. (c) The retort is charged and fired about 9 A. M. and firing continued until 5 P. M. It cools over night and is opened the next forenoon.

The retort residue contains, in addition to gold and silver, base metals (chiefly lead, copper, arsenic and antimony) which were not removed at the time of cleaning the amalgam and were not volatilized. It also contains, according to Rose, at least 0.1% mercury, which can be driven off only by melting. This seems a very low figure to the author. The amount of base metals in the residue will vary with the conditions, such as the kind of ore, the purity of the water, the care taken not to scrape plates to bare copper and the care in cleaning amalgam. Thus in Mill 56 where the conditions are very favorable, the retort residue is 935 to 956 fine in gold and is shipped direct, thereby saving the cost and labor of melting. On the other hand, the retort residue at the Peak Hill mine, New South Wales, was a black mass of copper oxide, iron and gold caused by the action of acid water containing copper sulphate upon fine particles of iron causing them to amalgamate.[73]

§ 561. Loss in Weight by Retorting or the Proportion of Bullion in Amalgam after Squeezing.—This varies within rather wide limits. Where the gold is coarse the percentage of bullion will be higher than where it is fine, owing to the presence of unpenetrated nuggets. The harder the amalgam is squeezed, the higher it will retort. Working it in warm water also tends to raise its per cent. The evidence indicates that where unpenetrated nuggets are absent, the contents of gold will always fall a few per cent. below the theoretical 40% of No. 2 amalgam, owing to a little remaining No. 1 amalgam in its interstices. Since coarse gold is caught nearer the battery than fine, it follows that amalgam from the head of the plates loses less than that from the foot. The figures which the author has obtained from the mills are given in Table 349, and show that squeezed amalgam contains from 17 to 60% bullion.

TABLE 349.—PERCENTAGE OF BULLION IN SQUEEZED AMALGAM.

Mill.	Percent.	Mill.	Percent.
56	About 50	Caledonia	33
65, 73 and 74	38	Deadwood Terra	25
66	38 to 40	Harshaw (Silver)	17
67	50 to 60	Twelve Apostles (summer)	25 to 35
69	About 33	Twelve Apostles (winter)	7 to 10

Mills 66, the Caledonia and the Deadwood Terra are all near together in the Black Hills, but they form a decreasing series. In the second the amalgam is

not so carefully cleaned as in the other two, while in the third the gold is finer than in the other two. The per cent. given for Mill 66 is the average of the mill. Samples taken from the head of the plates retorted 35 to 37%, while those from the tail retorted only 20 to 22%. Silver amalgam gives a much lower per cent. of bullion than gold. There are three things which would cause the per cent. of bullion in silver amalgam to be different from that in gold amalgam. First, the specific gravity of silver is only a little over one-half that of gold. Second, silver amalgam usually contains no unpenetrated nuggets. Third, silver may be combined with mercury in different proportion than gold. The first and second would tend to lower the per cent. of bullion in silver amalgam, while the third would either reduce or increase it as the case might be.

§ 562. MELTING.—The residue left in the retort is taken out, cut up, if necessary, and melted in a graphite crucible in a pot furnace. Before a graphite crucible is used for the first time it should be annealed by drying it thoroughly and then gradually heating it upside down until it is red hot. Louis recommends good clay, or, better, Salamander crucibles, especially where fluxes are to be used, as the latter cut the graphite crucibles badly. The diameter of the furnace should be at least 5 or 6 inches larger than the outer diameter of the crucible, and should allow of 5 inches space between the bottom of the crucible and the grate. Charcoal, or, better, coke should be used for fuel. The crucible usually rests on a brick on the grate, and is heated hot before the metal is put in. A cover is used so that the crucible is imbedded in fuel. The common fluxes used are borax, soda, nitre, and silica. The more soda used the more liquid the slag is, and the better for pouring; the more silica, the higher will be the fineness of the bullion, but the slag is more pasty and liable to contain shots. Nitre eats the crucible and is best not added until near the end of the process; its office is to oxidize copper, lead, iron, etc. Some mills add a little corrosive sublimate near the finish after the slag is skimmed off. The pouring should be delayed from two to ten minutes after its addition, until the white fumes, which are poisonous, are all off. Its action is to give off chlorine, which combines with and volatilizes any arsenic or antimony present.

The slag which is formed on top may be skimmed off by passing over the surface a flat coiled rod of cold iron, or the slag may remain on and be poured with the metal into the ingot moulds. Just before pouring, the contents of the crucible are well stirred with a graphite paddle. After pouring where the slag has not been removed, as soon as the gold has set, the mould is overturned into a bucket of water when the slag will easily separate from the metal. Cast iron ingot moulds of various sizes are used which are smoked evenly by inverting over a fire of cotton waste, coal oil and pitch or rosin and then heating. Washing with oil is often used instead of smoking. When the ingot is cold, it is sampled by taking two chips from diagonally opposite corners, and then shipped to the U. S. Mint or to any bullion dealer. The slag always contains more or less gold, and it is either remelted to settle out most of the shots and the partly cleaned slag sold to a smelter, or else it is run through the stamp battery along with old crucibles.

At Mill 66 it takes four hours to melt four bars, weighing 1,000 to 1,400 ounces each, and the graphite crucible lasts 8 to 12 charges. The cast ingot always weighs less than the retort residue. In Mill 66 the difference was 1½%, while in the Caledonia mill, where the amalgam is cleaned less carefully, the loss was 7%. There is also less gold in the cast ingot since some has gone into the slag and adhered to the walls of the crucible. The loss of gold in this way, however, can be reduced to practically nothing by sending the slags, old crucibles, flue dust, etc., back to the stamps or to the clean up barrel.

All the foregoing applies to gold mills. In silver mills the process of melting is very similar except that it is done on a much larger scale. Small reverberatory

furnaces are sometimes used; fine charcoal is sprinkled over the ingot directly after pouring, to prevent sprouting and the sampling of the ingot is done by taking borings from both the top and bottom.

Sampling a gold or silver ingot requires special care, since if there is even a small amount of other metal present liquation will occur, enriching either the top or the bottom of the ingot. In this case a dip sample taken after stirring and just gefore pouring is preferable to either boring or cutting diagonally opposite corners of the ingot.

§ 563. FINENESS OF BULLION.—The ingot after melting contains gold, silver and almost invariably a small amount of base metals, usually copper and iron. The amount of gold or silver in it is given by its fineness or number of parts in a thousand; thus to say that bullion is 800 gold fine means that out of 1,000 parts bullion, 800 parts or 80% are gold. The fineness of the bullion will vary in different mills according to the constituents of the ore and water, the condition of the plates and the care that is taken in cleaning amalgam. The composition of the bullion from a few of the mills is given in Table 350 to show the variation that may occur, and these do not include extremes. Perhaps the average fineness in gold is about 800. The increase in base metal contents in the Caledonia mill over Mill 66 is due to less care in cleaning amalgam.

TABLE 350.—FINENESS OF BULLION.

Mill Number.	Fineness in			Mill Number.	Fineness in		
	Gold.	Silver.	Base Metals.		Gold.	Silver.	Base Metals.
56	935 to 956			69	840 to 860	125 to 140	
59	805			82 (Plates)	500 to 600	400 to 500	
61	808			82 (Pans)	15	750	
66	820	165	15	84	50 to 500	400 to 850	
67	960 to 963			86	650	300	50
68	600	390		Caledonia	798	182	20

§ 564. CARE AND PURIFICATION OF MERCURY.—The mercury or No. 1 amalgam that is separated by straining is generally used over again in the mill, as the small amount of gold and silver which it contains makes it a better agent for catching gold than pure mercury. If, however, it contains besides these a considerable amount of impurities, such as base metals (lead, copper, iron, bismuth, arsenic and antimony) and their compounds, it is best to clean it before using it over. Impure mercury is easily recognized by the fact that globules are pear-shaped with tails in flowing down over a glass plate or a gold pan, and they do not unite readily. It will also leave a film on rough blotting paper, and when shaken in a bottle with dry air a black powder forms on the surface. On the other hand, pure mercury gives brighter hemispherical globules and exhibits none of the properties just mentioned. Mercury may be made somewhat brighter and livelier by the addition of sodium amalgam, the action of which in partially removing impurities has already been explained in § 526. At the Haile gold mine[27] sodium phosphate is used to make the mercury bright and lively. Louis Janin, Jr.,* reports that zinc amalgam made by amalgamating zinc with the aid of sulphuric acid has been very successfully used in the pan amalgamation of silver ores for restoring mercury in a foul condition to a state of purity. Retorting at a low temperature, having the retort only half full, and using a cover 1 or 2 inches thick of charcoal powder or quicklime will remove the most of the impurities. Charcoal powder prevents the formation of any volatile oxides, as of lead. The quicklime breaks up any sulphides or arsenides contained in commercial quicksilver, and which might distil over without being broken up.

Impurities held in suspension in mercury may be removed by allowing it to

* Private communication.

run through a cone made of two or three thicknesses of filter paper or blotting paper which has a pin hole at the apex of the cone. Small amounts of impurities may be removed by treatment with caustic potash, dilute acids, potassium cyanide, etc. This may be done by keeping the mercury covered by one of these agents and stirring occasionally, or it may fall in a thin stream or spray through a column of the agent four or five feet high. Mercury should be kept in a glass, earthenware, or porcelain lined vessel under a layer of weak potassium cyanide solution or dilute nitric acid (1 part acid to 4 of water). The mercury is drawn off from a stop cock in the bottom, as desired, and is washed with water before using. The use of two such vessels allows time for the impurities to be removed in one while mercury is being used from the other.

One instance is reported where bismuth is present in the ore and finds its way into the mercury. To remove it from mercury, the mercury is placed in a retort and partly distilled; then the retort is cooled and crystals of the compound of bismuth and mercury ($BiHg_x$) which collect on the surface of the mercury in the retort are removed and distilled separately. The bismuth residue contains about 25% gold, which is shipped to refinery.

§ 565. Loss of Mercury.—The amount of the loss of mercury per ton of ore has already been given in § 186. It seems proper to sum up here the various ways in which losses may occur. The remedies, as far as known, have been previously given in § 526. (1) Flouring is the source of the greatest loss. There will always be some floured mercury and amalgam which is in such a fine state of division that it will escape the mercury traps and go into the concentrates or the tailings. This loss is less the oftener the plates are cleaned. (2) Mercury may adhere to a bright spot on metallic particles, for example, included grains of gold, and pass beyond the traps. (3) Mercury may be lost by forming an amalgam with copper or lead, which is lighter than mercury and liable to be lost. (4) Mercury may be lost mechanically in many ways by careless handling. If spilled on the floor it divides into little globules which cannot all be recovered. The loss in this way may be reduced by handling mercury as far as possible under water, which acts as a blanket and prevents spattering. (5) In retorting, a small amount of mercury (0.1% or over) is always retained in the retort residue and is lost in melting; a small amount probably also escapes into the air. (6) The evaporation of mercury at ordinary temperatures is a hardly appreciable source of loss. (7) Under certain conditions there may be a small chemical loss. Thus sulphate of copper in the battery water may be decomposed by mercury, forming soluble sulphate of mercury and a copper amalgam. This chemical loss is a great source of loss in pan amalgamation.

§ 566. Losses of Gold in Amalgamation.—This may take place in any or all of the following ways: (1) Flotation of fine grains which do not come in contact with the mercury. Having numerous drops in the line of plates and using a small amount of water reduces this. (2) Included grains in which the gold is surrounded by gangue. Finer crushing helps to avoid this. These grains will be caught in many cases by the concentrates. (3) Rusty gold, including gold surrounded by a film of any foreign substance which prevents it from coming in contact with mercury. The remedies for this are the same as for (2). (4) Compounds of gold, such as telluride. These may be saved on the concentrating machines unless crushed too fine. (5) Sickened or floured mercury which is unable to properly attack the gold or is so fine as to be lost in the tailings and may carry gold in solution. The remedies for flouring previously given reduce the loss in this way.

BIBLIOGRAPHY FOR AMALGAMATION.

1. Adams, W. J., (1899), "Amalgamation." Description of plates and traps, care of plates, treatment of amalgam.
2. Davies, E. H., (1894), "Mach. Metal. Mines," pp. 364, 377, 407. Care of plates, settlers, best conditions for amalgamation, losses, agitators.
3. Egleston, T., (1887 and 1890), "Metallurgy," Vols. 1 and II. Plates, settlers, agitators, amalgamators, care of amalgam, retorting, melting.
4. Eissler, M., (1896), "Metallurgy Gold," pp. 45, 60, 81, 92, 95. Atwood amalgamator, hydrogen amalgamator, settlers, Eureka rubber, shaking plates, Bazin's amalgamator, amalgamated plates, treatment of amalgam.
5. *Ibid.*, (1891), "Metallurgy Silver," pp. 37, 77. Settlers, agitators, care of amalgam, retorting and melting.
6. Gaetzschmann, M. F., (1872), "Aufbereitung," Vol. II., p. 570. Amalgamators.
7. King, Clarence, (1870), "Geol. Exp. 40th Parallel," Vol. III., pp. 200, 228. Settlers, agitators, retorting and melting.
8. Kirschner, L., (1899), "Erzaufbereitung," Part II., p. 133. Plates, treatment of amalgam, Laszlo's amalgamator.
9. Lock, A. G., (1882), "Gold," pp. 865, 902, 1030, 1041, 1062, 1142. Plates, mercury wells, Hungarian mill, settlers, retorting.
10. Louis, H., (1894), "Gold Milling." Properties of gold and mercury, amalgams, plates, wells, traps, retorting and melting.
11. McDermott, W. and Duffield, P. W., (1890), "Gold Amalgamation," p. 15. Amalgamated shaking plates.
12. Phillips, J. A., (1887), "Metallurgy," pp. 712, 778, 781, 787. Settlers, agitators, plates, retorting, melting, Hungarian mill.
13. Rickard, T. A., (1897), "Stamp Milling." This book contains all the articles by this author that appeared in the *Eng. and Min. Jour.* (*q. v.*).
14. Rittinger, P. R. von., (1867), "Aufbereitungskunde," p. 467. Theory, Hungarian mill, mercury wells, treatment of amalgam, retorting.
15. *Ibid.*, (1873), "Zweiter Nachtrag," p. 71. Settlers.
16. Rose, T. K., (1894), "Gold." Properties of gold, amalgams, plates, retorting, losses in amalgamating, amalgamators.

---

17. *Ala. Ind. & Sci. Soc.*, Vol. VI., Part II., (1896), p. 67. J. Franklin. Description of shaking plates and blankets at the Idaho mine, Alabama, for saving gold from a clayey ore.
18. *Am. Assoc. Adv. Sci.*, Vol. XXXVIII., (1889), p. 145. W. L. Dudley. Discussion of the nature of amalgams.
19. *Am. Inst. Min. Eng.*, Vol. II., (1874), p. 168. J. M. Adams. Treatment of amalgam and losses of mercury at the Owyhee silver mill.
20. *Ibid.*, Vol. VIII., (1880), p. 362. R. H. Richards. Dressing of new plates and the use of silver amalgam thereon.
21. *Ibid.*, Vol. X., (1881), p. 97. A. J. Bowie. The use of the Eureka rubber and traps in the Father de Smet mill.
22. *Ibid.*, Vol. XI., (1882), p. 36. A. N. Rogers. A few causes of sickening and flouring of mercury.
23. *Ibid.*, p. 97. W. L. Austin. Description of settlers and retorts at the Harshaw mill.
24. *Ibid.*, Vol. XVII., (1889), p. 526 *et seq.* H. O. Hofman. Description of plates and traps in the Black Hills. Method of treating new plates, the daily dressing and care of amalgam.
25. *Ibid.*, Vol. XXIII., (1893), p. 143. T. A. Rickard. The slope of plates and the best surface for catching gold.
26. *Ibid.*, Vol. XXIV., (1894), p. 215. E. R. Abadie. Description of plates at the North Star mill. Results obtained by sweating plates.
27. *Ibid.*, Vol. XXV., (1895), p. 779. H. B. C. Nitze and H. A. J. Wilkens. Description of plates and their treatment at the Haile Gold mine.
28. *Ibid.*, pp. 916, 924, 928. T. A. Rickard. Description of plates and traps in the Black Hills and at Grass Valley. Discussion of the width and silver plating of plates.
29. *Ibid.*, Vol. XXVI., (1896), pp. 33, 1039; Vol. XXVII., (1897), p. 1003. R. T. Bayliss. Accumulation of amalgam on plates.
30. *Ibid.*, Vol. XXVI., (1896), p. 545. E. A. Sperry. Description of plates for a Tremain steam stamp. Notes on the care of plates and the accumulation of amalgam on them.

31. *Ibid.*, Vol. XXVIII., (1898), p. 553. W. J. Loring. Description of plates, method of dressing and care of amalgam at the Utica mills.
32. *Ibid.*, Vol. XXIX., (1899), p. 249. E. R. Woakes. Description of the plates and the method of sweating amalgam from them by hot sand at the Espiritu Santo mill, at Cana in the Darien.
33. *Ibid.*, p. 488. S. H. Loram. Description of amalgamating pans lined with amalgamated plates.
34. *Ibid.*, p. 459. A. J. Clark. Ratio of gold to silver in plate amalgam.
35. *Austr. Inst. Min. Eng.*, Vol. V., (1898), p. 128. W. H. Vale. Advantages of plates over mercury wells.
36. *Berg. u. Hütt. Zeit.*, Vol. XXIX., (1870), p. 233 *et seq.* A. Reichenecker. A general article with notes on plates and amalgam.
37. *Ibid.*, Vol. LVI., (1897), p. 346. B. Knochenhauer. A few notes on plates and amalgam.
38. *Bull. Soc. Ind. Min.*, Series III., Vol. XIII., (1899), p. 5. F. Coignet. General article on gold milling entering considerably into amalgamation.
39. *Cal. Bull.*, No. 6, (1895), pp. 28, 43, 65. E. B. Preston. A general article on plates, traps and treatment of amalgam.
40. *Cal. Rep.*, Vol. VIII., (1888), pp. 711, 714. J. Hays Hammond. General article on plates and traps.
41. *Can. Min. Inst.*, Vol. I., (1896), p. 21. F. Hille. Description of Krupp amalgamating table with steps on it, and the Laszlo amalgamator.
42. *Can. Min. Rev.*, Vol. XV., (1896), p. 60. Similar to *Can. Min. Inst.*, Vol. I., p. 21.
43. *Ibid.*, Vol. XVI., (1897), p. 160. J. E. Hardman. Notes on the care of plates and mercury.
44. *Ibid.*, Vol. XVII., (1898), p. 43. F. T. Snyder. Gyrating amalgamated plates.
45. *Coll. Eng.*, Vol. XVII., (1897), pp. 268, 300, 344. H. Van F. Furman. General article on plates, traps, properties of mercury and treatment of amalgam.
46. *Ibid.*, p. 357. Abstract of *A. I. M. E.*, Vol. XXV., p. 906.
47. *Engineering*, Vol. LXI., (1896), p. 646. No author. Description of Hewitt's patent amalgamator.
48. *Eng. & Min. Jour.*, Vol. XIV., (1872), pp. 84, 98. J. A. Church. Gravity theory of the amalgamation of gold.
49. *Ibid.*, Vol. XVII., (1874), p. 305. Same as *A. I. M. E.*, Vol. II., p. 168.
50. *Ibid.*, p. 369. No author. Description of a North Carolina amalgamator.
51. *Ibid.*, Vol. XXIX., (1880), p. 271. Same as *A. I. M. E.*, Vol. VIII., p. 362.
52. *Ibid.*, Vol. XXXIV., (1882), p. 296. Same as *A. I. M. E.*, Vol. XI., p. 36.
53. *Ibid.*, Vol. XLVIII., (1889), p. 118. C. H. Aaron. Discussion of the losses in gold amalgamation and the remedies.
54. *Ibid.*, Vol. LIV., (1892), pp. 198, 222. T. A. Rickard. Description and treatment of plates at the Hidden Treasure mill, Colorado.
55. *Ibid.*, pp. 534, 558. T. A. Rickard. Description of plates and wells in the Thames district, New Zealand, with discussion of the advantages and disadvantages of Muntz metal.
56. *Ibid.*, Vol. LV., (1893), pp. 79, 101. T. A. Rickard. Description of amalgamation by mercury wells in the mills at Clunes, Australia.
57. *Ibid.*, p. 247. T. A. Rickard. Description of plates preceded by blankets in the Premier mill, Otago, New Zealand.
58. *Ibid.*, p. 389. T. A. Rickard. Description of plates and traps in the mills at Ballarat, Australia, and discussion of the use of warm water.
59. *Ibid.*, pp. 534, 560. T. A. Rickard. Plates in the Ovens district, Victoria, and advantages of silver plated copper over plain copper.
60. *Ibid.*, Vol. LVI., (1893), p. 51. T. A. Rickard. Discussion of the size of plates.
61. *Ibid.*, pp. 646, 664. T. A. Rickard. Plates in Amador County mills, California.
62. *Ibid.*, Vol. LVII., (1894), p. 174. T. A. Rickard. Plates in the mills at Bendigo, Australia.
63. *Ibid.*, pp. 460, 486, 511. T. A. Rickard. Description of plates at Grass Valley, California.
64. *Ibid.*, Vol. LVIII., (1894), p. 489. F. M. Drake. Description of plates in Wentworth mill at Lucknow, Australia.
65. *Ibid.*, Vol. LX., (1895), p. 247. T. A. Rickard. Description of plates and traps in the mills of the Black Hills.
66. *Ibid.*, p. 371. T. A. Rickard. Condemnation of narrow sluice plates.
67. *Ibid.*, Vol. LXI., (1896), p. 615. R. G. Brown. Description of plates and traps at Bodie, California, and treatment of plates and amalgam.
68. *Ibid.*, Vol. LXV., (1898), p. 126. Editor. Temperature of water for amalgamation at the Homestake mills.

69. *Ibid.*, p. 397. J. A. Sanborn. Discussion of temperature of water for amalgamation.
70. *Ibid.*, p. 760. H. A. Von Dessauer. Discussion of temperature of water for amalgamation.
71. *Ibid.*, Vol. LXVI., (1898), p. 183. F. F. Sharpless. Effect of warm water to harden amalgam on plates.
72. *Ibid.*, p. 370. E. R. Woakes. Hardening of amalgam on plates.
73. *Ibid.*, p. 393. E. M. Mardin. Foul amalgam from copper sulphate.
74. *Ibid.*, p. 423. A. L. Collins. Discussion of hardness of amalgam on plates.
75. *Ibid.*, p. 578. F. L. Carter. Method of treating amalgam in the Transvaal.
76. *Ibid.*, Vol. LXVIII., (1899), pp. 334, 762. Abstract from *Am. Inst. Min. Eng.*, Vol. XXIX., p. 459.
77. *Inst. Min. & Met.*, Vol. I., (1892-3), pp. 205, 240. C. G. W. Lock. Discussion of the losses in battery and plate amalgamation and description with results obtained by a new pan amalgamator having an electric current setting hydrogen and sodium free in a mercury bath.
78. *Min. Ind.*, Vol. III., (1894), p. 309. L. Janin, Jr. A general article on plates, traps, and care of amalgam.
79. *Min. Soc. N. Scotia*, Vol. I., Part II., (1892-3), p. 38. J. E. Hardman. Description of plates and traps in the Oldham mill.
80. *Min. & Sci. Press*, Vol. LXVII., (1893), p. 83. No author. Use of mercury wells at Mayflower drift mine.
81. *Ibid.*, p. 177. No author. Description of an amalgam trap.
82. *Ibid.*, Vol. LXXI., (1895), p. 320 *et seq.* Same as *Cal. Bull.*, No. 6.
83. *Ibid.*, Vol. LXXIV., (1896), p. 152. Newell & Newell. Slope of plates in Penn and Iron City mills, Colorado.
84. *Ibid.*, Vol. LXXVII., (1898), p. 203. No author. Method of removing stains from plates.
85. *Ibid.*, p. 261. No author. Objections to the use of acids on plates.
86. *Ibid.*, p. 505. No author. Discussion of the temperature of amalgamation.
87. *Ibid.*, p. 555. No author. Condemnation of the use of acids and potassium cyanide on plates.
88. *Ibid.*, p. 556. W. F. Drake. Discussion of the temperature of amalgamation and the use of acid on plates.
89. *Ibid.*, Vol. LXXVIII., (1899), p. 5. L. Blanding. Effect of temperature of battery water on amalgamation.
90. *Ibid.*, p. 400. Abstract of *Am. Inst. Min. Eng.*, Vol. XXVIII., p. 553.
91. *Ibid.*, p. 206. H. S. C. Effect of the temperature of battery water on amalgamation.
92. *Ibid.*, p. 400. A. D. Gassaway. Description of plates, riffles and sluice plates at the Magalia drift mine.
93. *Ibid.*, Vol. LXXIX., (1899), p. 8. Same as *Raymond's Rep.*, (1871), p. 363.
94. *North Eng. Inst. Min. & Mech. Eng.*, Vol. XLII., (1892-3), pp. 108, 198. A. G. Charleton. Discussion of losses in amalgamation and the causes and remedies for sickened mercury.
95. *Oest. Zeit.*, Vol. XXXVII., (1889), pp. 553, 569, 578. Translation of *Cal. Rep.*, Vol. VIII., p. 711.
96. *Prod. Gold & Silver in U. S.*, (1881), p. 563. C. G. Yale. Description of several patent amalgamators.
97. *Ibid.*, (1882), p. 706. No author. Description of Gowan's amalgamator.
98. *Raymond's Rep.*, (1870), p. 669. W. P. Blake. Details of plates in a few mills.
99. *Ibid.*, (1871), p. 339. Same as *Berg. u. Hütt. Zeit.*, Vol. XXIX., p. 233.
100. *Ibid.*, p. 363. N. S. Keith. Very elaborate article on material and treatment of plates.
101. *Ibid.*, (1873), p. 319. G. F. Deetken. Description of the Atwood Amalgamator, the Eureka rubber, and notes on straining and retorting amalgam.
102. *Ibid.*, (1874), p. 408. Same as *A. I. M. E.*, Vol. II., p. 168.
103. *Sch. Mines Quart.*, Vol. V., (1883-4), p. 359. F. D. Browning. Description of plates in Providence mill.
104. *Ibid.*, Vol. XXI., (1899), p. 53. A. J. Clark. Full details of silver plating copper plates at the Homestake mill.
105. *Tenth U. S. Census.*, Vol. XIII., (1880), pp. 255, 257, 266, 267. S. F. Emmons and G. F. Becker. A few notes on plates. Per cent. of gold and silver in amalgam. Treatment of amalgam. Retorting. Melting.

CHAPTER XVIII.

MISCELLANEOUS PROCESSES OF SEPARATION.

This chapter includes operations of occasional application, such as Magnetic Concentration and Roasting for Magnetism, Pneumatic Concentration and the following minor processes:

Separation by Centrifugal Force,
Roasting for Porosity,
Heating for Decrepitation,
Disintegration Followed by Screening,
Disintegration Followed by Settling or Elutriation,
Weathering,
Adhesion.

Magnetic Concentration.

§ 567. When Applicable.—Magnetic separation has been confined in practice almost entirely to the separation of iron ores from gangue, or from other heavy minerals. Magnetite has been separated directly, as in Mills 89 and 91, but limonite, hematite and siderite have almost always been given a preliminary roasting to convert them into the magnetic oxide, as in Mill 93. The separation of blende from pyrite, or other iron ores, which can be only imperfectly done in the wet way, is readily effected magnetically after a preliminary roasting to convert the iron ore to magnetic sulphide or oxide. Recent advances in the design of magnetic separators have led to their use directly on ores containing iron or manganese, which are only weakly magnetic. Thus, in Mill 92, franklinite, garnet, tephroite and fowlerite are separated from zinc ores. Tests have also shown that hematite, limonite and siderite can be separated from their gangue in this way.

In regard to the separation of minerals other than iron ores, although the author knows of no plants in operation, yet small scale tests have made a separation on many minerals which lie so near one another in specific gravity as to preclude a separation in the wet way. Among these separations are (1) rutile from apatite, (2) rutile, garnet and monazite from one another, (3) garnet from garnetiferous rocks and schists, (4) garnet and other injurious iron minerals from corundum, (5) siderite from cryolite, (6) emery from gangue. Where the two minerals to be separated lie very close to one another in their magnetic properties, they must be very closely sized before treating. Sometimes they are so close that a separation is impossible, as was the case with a certain chromite ore which was to be separated from serpentine.

In addition to iron ores, magnetic separation has been applied to various waste products; for example, to the separation of iron in the form of scrap and shots from blast furnace refuse, and in the Bessemer process; also to the separation of iron from brass turnings in machine shops.

§ 568. Designing of Electromagnets.—Steel bars may be magnetized and retain more or less magnetism indefinitely. Bars of soft wrought or of cast iron may be magnetized by electric currents in surrounding coils of insulated

copper wire. These iron bars form electromagnets as long as the current flows, and on account of their greater strength and certainty, are preferred to the relatively weak and uncertain permanent steel magnets for practically all magnetic machines.

All magnets have north and south poles and would, if suspended, line themselves up with the compass or magnetic meridian of the earth. The poles of an electromagnet may be reversed by simply reversing the direction of flow of the electric current. The magnetism, or magnetic field can be obtained of different intensities ranging from indefinitely weak to a certain maximum of strength. For application to the purposes of separation of ores, it is necessary to be able to control the intensity of the field for any specific separation. Thus magnetite, a strongly attracted substance, may be separated from apatite by a comparatively weak magnet, while the separation of franklinite from willemite and calamine requires a magnetic field of high intensity, and a higher still to separate red garnet, a very weakly magnetic substance, from corundum. The intensity of the magnetic field depends on the size of the magnet, the form of it, the distance between the body to be attracted and the magnet, and the number of ampere-turns in the magnet coil, that is, the product of the amperes of current flowing in the coil times the number of turns around the core.

The unit of magnetic field used by electricians is represented by one magnetic line of force per square centimeter. We have one line of force or a unit field whenever over one square centimeter there is a pull of one dyne (1.019368 mg.) upon a magnetic pole placed in it. The conception of lines of force expresses also direction as well as quantity. A unit pole is defined as a pole which gives 1 dyne pull upon a similar pole of opposite polarity placed at 1 centimeter distance from it. To get a practical understanding of the lines of force we may

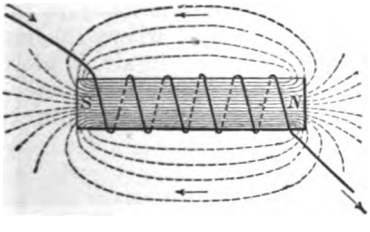

FIG. 454.

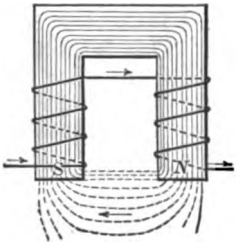

FIG. 455.

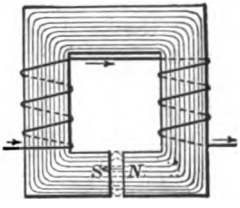

FIG. 456.

employ Maxwell's law that magnetic attraction varies as the square of the number of lines of force or P (dynes) $= \frac{B^2 A}{8\pi}$, where P represents the attraction or pull in dynes, B represents the intensity of field or number of lines per square centimeter and A represents the area of the field. Reversing this formula, we get $B = \sqrt{\frac{8\pi P}{A}}$. To illustrate the application of this let us suppose that the attraction between the poles N and S of Fig. 456 has been found to be 200 dynes and the area of each pole face is 2 square centimeters. Then the average number of lines of force per square centimeter is $\sqrt{\frac{8\pi 200}{2}}$, or 50.13.

The magnetic lines existing around magnets are well illustrated by Figs. 454, 455 and 456. These three figures show a varying amount of dispersion or scattering of the lines of force. Fig. 454 shows the most dispersion and Fig. 456 shows the greatest concentration.

§ 569. It is possible in this work to give only the prominent points on the theory and design of electromagnets. Magnetic lines of force are analogous to electric currents. They both form closed circuits. Corresponding to the strength of the electric current there is the number of magnetic lines of force produced; to the resistance of the electrical circuit corresponds the reluctance, as it is called, which opposes the magnetic lines of force; and finally, in place of the electromotive force, which tends to cause electrical currents, there is the magnetomotive force which tends to produce magnetic lines of force. Just as

$$\text{the strength of electrical current} = \frac{\text{electromotive force}}{\text{resistance of electrical circuit}} \text{ so also the}$$

$$\text{number of magnetic lines of force} = \frac{\text{magnetomotive force}}{\text{reluctance of the magnetic circuit}}.$$

The magnetomotive force in a magnetic circuit is directly proportional to the number of ampere-turns; the reluctance is directly proportional to the length of the circuit and inversely proportional to the sectional area, and likewise, to the permeability of the substances in the circuit.

By the term permeability, commonly denoted by μ, is meant a numerical coefficient which expresses how much greater the number of lines generated in a substance by a given magnetomotive force is than those which would be generated in air by the same force. For example, a magnetomotive force which will produce H magnetic lines per square centimeter in air, will produce B magnetic lines per square centimeter in a piece of soft annealed iron. The ratio $\frac{B}{H}$ is μ. The permeability of air and all the non-magnetic materials is practically 1; that of magnetic substances is greater than 1. The value H is generally used as a measure of the magnetomotive force. The permeability of iron is of special interest as it varies with the magnetomotive force and with the kind of iron. This is well shown by Fig. 457, where the magnetomotive force H, or a number of lines per square centimeter in air, is plotted as abscissæ and the corresponding number of lines B per square centimeter in iron is plotted as ordinates. For annealed wrought iron and cast iron this relation is also given in Table 351.

TABLE 351.—PERMEABILITY.

Annealed Wrought Iron.			Annealed Wrought Iron.			Gray Cast Iron.		
B.	*H.*	μ.	*B.*	*H.*	μ.	*B.*	*H.*	μ.
5,000	1.66	3,000	15,000	28.5	526	4,000	5	800
9,000	4	2,250	16,000	50	320	5,000	10	500
10,000	5	2,000	17,000	105	161	6,000	21.5	279
11,000	6.5	1,692	18,000	200	90	7,000	42	166
12,000	8.5	1,412	19,000	350	54	8,000	80	100
13,000	12	1,083	20,000	666	30	9,000	127	71
14,000	17	823				10,000	188	53
						11,000	293	37

It will be seen that iron does not give a proportional increase in B for an increase in H, and consequently, the permeability decreases. It is not possible to get a value of B in soft, annealed iron much above 20,000, without using an enormous magnetomotive force, and this point is, therefore, called the point of saturation of the iron. In designing electromagnets it is generally not good economy to let B go above 16,000 for wrought iron, or above 6,000 for cast iron.

§ 570. It is possible to express the number of lines of force in a magnetic circuit by a formula. Let S denote the number of turns in the coil; let i denote the strength of the current, that is, the number of amperes; let l be the length of the circuit in centimeters and A the area of its cross section in

square centimeters; let μ denote the permeability as before, and let N be the total number of magnetic lines flowing through the circuit, or as it is frequently called, the magnetic flux.

Then magnetomotive force $= \frac{4\pi Si}{10} = 1.257\ Si.$

Magnetic reluctance $= \Sigma \frac{l}{A\mu}.$

Magnetic flux, $N = \frac{\frac{4\pi Si}{10}}{\Sigma \frac{l}{A\mu}}$

The symbol Σ is to indicate a summation where different parts of the mag-

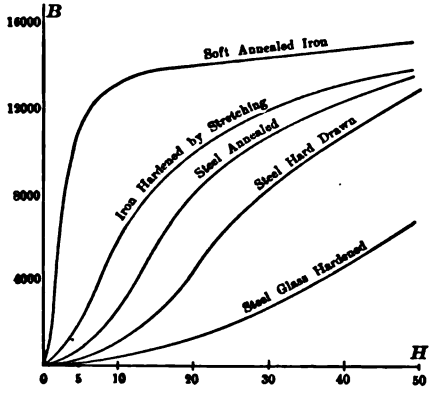

FIG. 457.—CURVES OF PERMEABILITY OF DIFFERENT KINDS OF IRON.

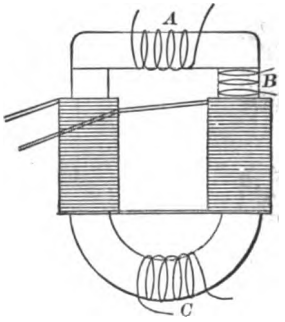

FIG. 458.—ELECTROMAGNET USED FOR LEAKAGE EXPERIMENTS.

netic circuit are not all of the same size and material. In that case the reluctance of each part must be calculated separately and all finally added together. The last formula shows how to calculate the strength of field of a magnet already constructed. What is more frequently desired is to construct a magnet which will give a certain strength of field. The various steps to accomplish this are as follows:

(1) Decide on the strength, length and area of cross section of the field or air gap between the poles. Since the best wrought iron cannot economically carry more than 16,000 magnetic lines per square centimeter, it follows that the number of lines per square centimeter in the air gap cannot go beyond this, and for economy it will be much below. Let it be assumed, for a specific example, that a field of 4,000 lines per square centimeter is desired over an area of 100 square centimeters, or 400,000 lines in all.

(2) Estimate the leakage or the number of extra lines which it will be necessary to produce in order to attain the desired strength of field. The number of these extra lines which depart from the circuit of the main body of lines, will depend upon the shape of the magnet and the length of the air gap. A magnet like that of Fig. 455, has more leakage than one like Fig. 456. The amount of leakage can be only roughly estimated. For a magnet like the last, with an air gap of $\frac{1}{4}$ inch, it may be about 0.3 of the useful lines, and for larger air gaps it will be greater. Probably in no case will it ever be over twice the number of useful lines even in a poorly designed magnet of the form

of Fig. 456. This leakage is always a very important quantity in all electromagnets. To give an idea of its variations, the following results of experiments made by Thompson on a magnet, as shown in Fig. 458, are given in Table 352. The cores of the magnet were 13-mm. diameter, and the coil consisted of 178 turns. The three coils *A*, *B*, and *C*, were connected with galvanometers and served to show the number of magnetic lines of force which passed through them under different conditions.

TABLE 352.—LEAKAGES IN THE MAGNETIC CIRCUIT OF FIG. 458.

Position of Armature.	Number of Lines per Square Centimeter.			Position of Armature.	Number of Lines per Square Centimeter.		
	At *A*.	At *B*.	At *C*.		At *A*.	At *B*.	At *C*.
With Current of 0.7 Ampere.				**With Current of 3.7 Amperes.**			
In contact	12,506	13,870	14,190	In contact	20,940	22,280	22,960
1 mm. from poles	1,552	2,163	3,786	1 mm. from poles	5,610	7,568	11,831
2 mm. from poles	1,149	1,487	2,839	2 mm. from poles	4,597	6,728	9,802
5 mm. from poles	1,014	1,061	2,028	5 mm. from poles	2,569	3,245	7,436
10 mm. from poles	676	1,014	1,690	10 mm. from poles	1,149	2,704	7,098
Removed	.....	675	1,352	Removed	.....	2,366	6,497
With Current of 1.7 Amperes.				**With Current of 5.7 Amperes.**			
In contact	18,240	19,590	20,288	In contact	21,980	23,660	24,040
1 mm. from poles	2,570	3,381	5,406	1 mm. from poles	8,110	10,810	17,220
2 mm. from poles	2,366	2,839	5,073	2 mm. from poles	5,611	8,464	15,886
5 mm. from poles	1,352	2,299	5,949	5 mm. from poles	4,056	5,273	12,637
10 mm. from poles	811	1,352	3,381	10 mm. from poles	2,029	4,057	10,142
Removed	.....	1,308	3,041	Removed	.....	3,581	9,795

Let it be assumed for the special magnet outlined in (1), that an air gap of $\frac{1}{4}$-inch length is desired. Then the number of magnetic lines of force to pass through the iron core will not be 400,000, but will be 1.3 times 400,000 or 520,000.

(3) Calculate the size of core. Since the iron cannot economically carry more than 16,000 lines per square centimeter, it follows that the cross section of the core must be $\frac{520,000}{16,000}$ or $32\frac{1}{2}$ square centimeters, which corresponds to a diameter of 6.4 centimeters.

(4) Determine the length of the core, yoke and pole pieces. The length of the core has to be assumed and the calculation carried through; if at the end it is found that a wrong length has been assumed, then another value is taken and the calculation repeated. A good figure of length of core to assume for the first calculation is to make the length equal to $4\frac{1}{2}$ times its diameter. The length of the yoke and also of the pole pieces (if any are used), must be determined at this point. These lengths should be as short as possible consistent with ample space for the winding of the cores. The yoke may economically be made of larger cross section than the cores. Let it be assumed for the calculation that each core be 28.8 cm. long, the yoke 21 cm. long and each pole piece 10.2 cm. long. This makes a total length of 99 cm.

(5) Calculate the ampere-turns required. This may be readily done by referring to the formula for magnetic flux: $N = \frac{\frac{4\pi Si}{10}}{\Sigma \frac{l}{A\mu}}$

which transposed is $Si = \frac{10}{4\pi} \times N \times \Sigma \frac{l}{A\mu}$.

In the magnet under consideration this formula has to be applied separately to the air gap and to the cores, yoke and pole pieces. For the air gap, $N =$

400,000, $l = 0.635$ cm. ($\frac{1}{4}$ inch), $A = 100$ sq. cm. and $\mu = 1$, and the number of ampere turns required will be $Si = \frac{10}{4\pi} \times 400{,}000 \times \frac{0.635}{100 \times 1} = 2{,}021.$ (I)

For the iron cores, yoke and pole pieces, $N = 520{,}000$; $l = 99$ cm., the total length of iron, that is, of cores, yoke and pole pieces; $A = 32\frac{1}{2}$ sq. cm., except at the ends of the pole pieces which may be neglected, and μ, as given in Table 351 for a value of $B = 16{,}000$, is 320. Hence the number of turns required for the iron will be $Si = \frac{10}{4\pi} \times 520{,}000 \times \frac{99}{32.5 \times 320} = 3{,}939.$ (II)

The sum of (I) and (II) or 6,060 is the total number of ampere-turns required.

(6) Calculating the winding. The number of turns required may be obtained by dividing the total number of ampere-turns by the strength of the current in amperes, which latter will vary with the source of power. Having obtained the number of turns necessary, it would seem that the desired result had been attained, but there is a certain amount of heat generated by the current in any coil of wire, which is retained in proportion as the depth of the coil increases, and, therefore, puts a limit upon the depth. The calculation of the heating involves the use of wire tables such as are given on page 178 of Thompson's Lectures on the Electromagnet.

(7) Re-calculation. It will very likely be found at the end that a wrong length has been assumed, either too short so that the coils are wound too deep, or too long so that the coils are stretched out unnecessarily, and the depth of the coils is much less than what it might be. In either case another length should be assumed and the calculation repeated. In fact, it is often necessary to repeat a half dozen times or more, and then by comparing the various results, to see which possesses the maximum advantage with regard to the weights of material used and the amount of current required.

§ 571. Where there is a large air gap its reluctance is so great, as compared to that of the iron part of the circuit, that for rough work the latter may be neglected, provided that the iron is kept well below the point of saturation. In this case the number of ampere-turns required to get a field of B lines per square centimeter through an air gap of a length of l centimeters is represented by the formula $Si = \frac{10}{4\pi} B.\, l.$

This formula is readily derived from the general formula $Si = \frac{10}{4\pi} N \Sigma \frac{l}{A\mu}$, which has been previously derived. Table 353 has been computed to show the number of ampere-turns required for various strengths of fields and lengths of air gaps.

TABLE 353.—NUMBER OF AMPERE-TURNS REQUIRED FOR VARIOUS STRENGTHS OF FIELD AND LENGTHS OF AIR-GAP.

Number of Magnetic Lines per Square cm.	Lengths of Air Gaps.						
	½ inch 1.27 cm.	¾ inch 1.91 cm.	1 inch 2.54 cm.	1½ inch 3.81 cm.	2 inches 5.08 cm.	2½ inches 6.35 cm.	3 inches 7.62 cm.
	Number of Ampere-Turns Required.						
500	505	708	1,011	1,516	2,021	2,527	3,032
1,000	1,011	1,516	2,021	3,032	4,043	5,053	6,064
2,000	2,021	3,032	4,043	6,064	8,085	10,106	12,128
3,000	3,032	4,548	6,064	9,096	12,128	15,159	18,191
4,000	4,042	6,064	8,085	12,128	16,170	20,213	24,255
5,000	5,053	7,580	10,106	15,160	20,213	25,266	30,319
6,000	6,064	9,096	12,127	18,192	24,255	30,319	36,383
7,000	7,074	10,611	14,149	21,224	28,298	35,372	42,446
8,000	8,085	12,127	16,170	24,256	32,340	40,425	48,510
9,000	9,095	13,643	18,191	27,286	36,383	45,478	54,574
10,000	10,106	15,160	20,212	30,320	40,425	50,532	60,638

In designing a magnet which is to be used for various purposes and requires a variable strength, it should be computed for the maximum strength desired, and then weaker fields may be obtained by adjustments, which allow the air gap to be lengthened or the strength of the electric current to be diminished. Where a very strong field is desired, the poles may be beveled off so that their area of cross section is less than that of the core. This, however, is done at a loss of some power, as halving the area does not by any means double the strength of the field. Consider a magnet like that of Fig. 456. The number of lines passing through the magnetic circuit is $N=\frac{\frac{4\pi Si}{10}}{\frac{l'}{A'}+\frac{l''}{A''\mu}}$ where Si is the ampere-turns, l', the length in cm. and A', the area of cross section in sq. cm. respectively of the air gap, l'', and A'', the length and area of cross section respectively of the iron, and μ the coefficient of permeability of the iron. If A' is decreased one half, then the first effect would be to cut down N nearly one half, since the expression $\frac{l''}{A''\mu}$ is relatively small compared to $\frac{l'}{A'}$. However, as soon as N is cut down, the number of lines per unit of area in the iron is reduced in the same ratio, since the area of the core has not been diminished. This diminution of the lines per unit of area, or B, will cause μ to increase, as shown in Table 351, and the larger value of μ substituted in the equation will tend to partly offset the smaller value of A and the net result of reducing A' one-half is that N is also reduced, but to a lesser degree, depending on the varying conditions of individual magnets. Since A is reduced to a greater degree than N, it follows that the strength of field per unit area is increased, although this effect is modified somewhat by the increased leakage.

§ 572. Action of Substances in a Magnetic Field.—All substances are either attracted or repelled by magnets. The former, which are comparatively few in number, are called paramagnetic and the latter, which are more numerous, diamagnetic. The paramagnetic substances are the metals iron, nickel, cobalt, manganese, chromium, cerium, titanium, palladium, platinum, osmium, and many of their salts and compounds. The degree of attraction of these substances varies widely. The metals iron, nickel and cobalt, and the minerals magnetite and pyrrhotite are quite strongly attracted, while the other paramagnetic substances are attracted only feebly, and there is a wide gap between them and the strongly attracted substances.

To illustrate the difference between strong and weak magnetic substances, Delesse says that if steel be taken at 100,000, then the attractability of magnetite is 65,000, of siderite 120, of hematite 93 to 43 and of limonite 72 to 43. The last three substances are so low that they have been considered non-magnetic, since no attraction was shown except in the very strong fields of recently constructed magnetic separators. However, by using a magnetic separator designed to give a very strong field and at the same time a field which is capable of fine adjustment, it is possible not only to separate these as well as many other weak paramagnetics from diamagnetics, but also to separate one from another even though the difference in attractability is slight.

§ 573. Classification of Magnetic Separators.—Magnetic separation may be divided into two parts: (1) the attraction of magnetic particles by the magnet, (2) the removal or conveying of the magnetic material away from the non-magnetic, or *vice versa*, after the former has been attracted. According to the

apparatus used for the second part, magnetic separators are, for the purpose of description, divided into three classes:

(I) Those with the ore on revolving cylindrical rolls or drums, within which are magnets.

(II) Those with the ore on conveying belts or pans which either traverse magnets or are traversed by magnets.

(III) Those in which the ore falls in front of magnets.

Other points of difference in machines are in the use of permanent magnets or electromagnets; in the treating of ore wet or dry; in the use of magnets acting continuously or intermittently; in the subjecting of the ore to alternate polarity, which causes the magnetic particles to reverse their position and thereby shake out the gangue, or to continuous polarity; and in the use of a direct or an alternating current.

Different machines are suited for different purposes. Separation of weakly magnetic substances requires a high power magnet. Separation of wet material without drying requires a machine adapted to use water. Separation of fine

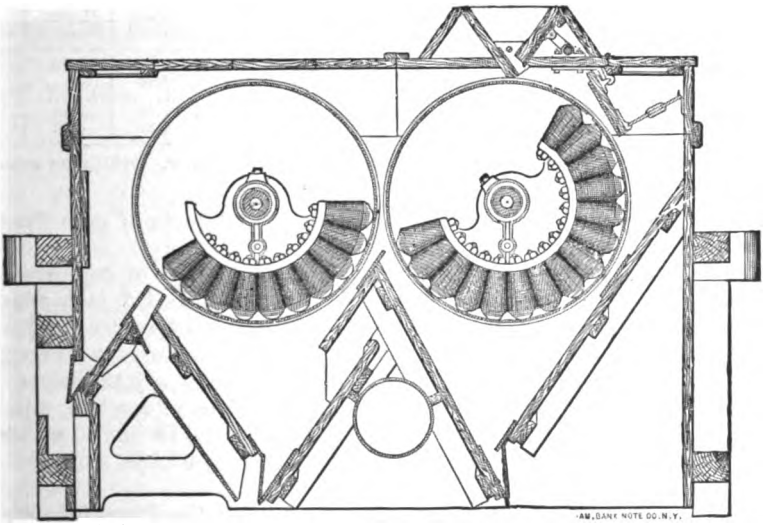

FIG. 459.—THE BALL-NORTON ELECTROMAGNETIC SEPARATOR.

stuff down to dust requires a machine which will spread the material out in a very thin layer, since otherwise the magnetic particles are buried under the non-magnetic, and are not taken out owing to the pressure of the non-magnetic particles surrounding them.

I. MAGNETIC SEPARATORS USING DRUMS.

§ 574. THE BALL-NORTON OR MONARCH MAGNETIC SEPARATOR.—As shown in Fig. 459, this consists of two revolving drums. Within each of these drums is a series of stationary electromagnets so wound that opposite poles are adjacent to one another. Each magnet extends the whole working length of the drum. The ore is fed upon the top of the first drum, and as the drum revolves, the magnetic particles adhere to it, while the non-magnetic particles fall into a hopper below. The magnetic particles, as soon as they pass beyond the field of the magnets of the first drum, are thrown off by centrifugal force against the second drum. This second drum either revolves at a faster rate than the first or else the strength of the current is less, so that some magnetic particles which

adhered to the first drum fail to adhere to the second drum, and drop down into a second hopper, thereby forming a middling product. Particles adhering to the second drum are thrown over a partition as soon as they pass beyond the magnets. The alternate polarity of adjacent magnets in each drum, causes the magnetic particles to roll over and over while they pass by them. This action aids in the elimination of the gangue. A blast of air, acting in an opposite direction to the travel of the ore, removes dust. The capacity of a machine with drums 2-feet diameter and 2-feet face, varies from 15 to 20 tons of crude ore per hour, which has passed through a 16 or 20-mesh sieve. For best work the feed should be not over 1 mm. in size and perfectly dry. A plant at the Benson mines, St. Lawrence County, New York, had a capacity of 1,000 tons of crude ore per 24 hours, yielding about 500 tons of concentrates. A few results of its work are given in Table 354.

TABLE 354.—PRODUCTS OF BALL-NORTON SEPARATOR.

Mine.	Crude Ore.		Concentrates.			Tailings.	
	Iron. Percent.	Phosphorus. Percent.	Iron. Percent.	Phosphorus. Percent.	Silica. Percent.	Iron. Percent.	Percent of Raw Ore.
Benson (a).....	32.95	0.15	64.09	0.032	.....	2.90	50.0
Port Henry (new bed)....	47.70	.....	70.9	0.0089	1.48	.....	38.0
Port Henry (old bed).....	58.70	2.25	71.1	0.037	.....	.....	20.0
Croton, N. Y. (b).....	42.99	0.153	69.86	0.021	1.71	7.95	47.0
Chateaugay Tailings.....	11.80	.....	68.365	0.008	4.31	4.33	89.0

(a) This ore contained 1.00% sulphur and its concentrates had 0.21% sulphur. (b) This ore contained 0.30% sulphur and its concentrates had 0.04% sulphur.

The power required is 1 to 1½ horse power for the magnets of each drum and ½ to ¾ horse power for revolving the drums.

This machine is used in Mill 89, where the drums are of compressed paper ¼ inch thick, 30 inches diameter, 36 inches face and placed 1 inch apart. The first drum makes 40 revolutions per minute and uses a current of 10½ amperes; the second drum makes 50 revolutions per minute and uses a current of 13 amperes. It is fed with stuff which has passed through a 2.12-mm. ($\frac{1}{12}$ inch) round hole and makes heads to smelter, middlings to be re-crushed, and tailings to waste. It treats 125 tons of raw ore (magnetite) in 10 hours, which carries 30% iron, and makes 45 tons of concentrates running 65.5% iron and 80 tons of tailings, running 2½ to 3% iron.

§ 575. THE SAUTTER MAGNETIC SEPARATOR, used at the Pierrefitte and Friedrichssegen mines for the separation of blende from magnetite, is much like the Ball-Norton in principle. It has but one drum, made of copper, and the electromagnets extend over only one of the lower 90° quadrants lying between a vertical and horizontal radius. The ore is fed against the drum at the upper limit of the magnets, and the non-magnetic particles immediately fall down between the drum and an inclined plane into their compartment. The magnetic particles are attracted and are carried down by the drum until they pass the last magnet at the vertical radius, when they fall into a separate compartment. At Pierrefitte, the most convenient velocity was found to be 64 revolutions per minute, and its capacity was 4 to 5 tons of ore per hour. It used 16 amperes with 110 volts, which is equivalent to 2.3 horse power.

§ 576. In the SIEMENS AND HALSKE MAGNETIC SEPARATOR, used at Maiern, Austria, the action is the same as in the Sautter. The drum is of brass, 60 cm. long, 60 cm. diameter and 2 mm. thick. There are longitudinal projections on it, consisting of half round brass rods, 6 mm. high and 9 cm. apart. The magnets are of alternate polarity in order to cause the magnetic particles to roll over and over. There are three magnet cores, each 25 mm. thick, 500 mm. wide and 110 mm. long. The cores are wound with double copper wire 4 mm.

in diameter, and each core has five layers of 21 turns, making the total length of wire for the three cores as 381 meters. The capacity on stuff ranging from 1 to 3 mm. in diameter, is 1½ tons per hour and for stuff below 0.5 mm., 1 ton per hour. The capacity depends on the velocity of the drum. The speed is limited, however, owing to the fact that beyond a certain point the centrifugal force becomes sufficient to throw off the magnetic particles. This limit for a 60-cm. drum is 45 revolutions per minute, corresponding to a surface velocity of 1.4 meters per second.

§ 577. THE HEBERLI MAGNETIC SEPARATOR is shown in Fig. 460. This differs from the Sautter in that the drum revolves in the opposite direction, and consequently the electromagnets are set higher up. As used at Friedrichssegen for separating roasted blende and siderite, a 1 horse power dynamo will run four separators each treating stuff below 4 mm. at the rate of 500 kilos per hour. It takes ¼ horse power to revolve the drum 45 times per minute. The current used is 17 amperes.

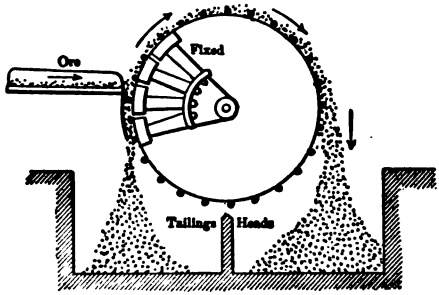

FIG. 460.—SECTION OF THE HEBERLI DRY MAGNETIC SEPARATOR.

§ 578. THE FERRARIS MAGNETIC SEPARATOR has been successfully applied to the separation of roasted blende and iron ore at Monteponi, Sardinia. It consists of a hub, with twenty-four cast iron magnet cores placed radially, on each of which is a coil of copper wire. Outside of them is a corrugated cylinder of non-magnetic material, and at the two ends are two disc flanges of zinc. The magnets are all wound in a series and from each wire, which connects two successive magnets, there is a branch wire leading to one or the other of two annular segment ring commutators placed one on each of the zinc discs. There are, therefore, twelve segments in each commutator. Alternate wires lead to different commutators. The brushes, one for each commutator, are set diametrically opposite to each other and thus the current enters by one commutator, splits in halves, and each half passes around through the magnets for 180° and out through the other commutator. The magnets, cylinder and commutators all revolve together. Each brush is wide enough to touch two adjacent sections of its commutator, and thus two diametrically opposite magnets are continually out of the circuit and form a neutral plane, which is usually set at an angle of 45° with the horizontal. Ore is fed on the top of the cylinder, and is held on the cylinder by gravity in passing the upper edge of the neutral plane. As the revolution continues, the non-magnetic particles fall off, and when it reaches the lower edge of the neutral plane, the magnetic particles also. By a suitable arrangement of partitions, three products may be made: heads, middlings and tailings. A current of 6 amperes with 30 volts is required, and the magnets revolve 12 to 20 times per minute. The original ore contains 26% zinc and 10% iron. It is first heated in a furnace sufficiently to render the iron magnetic. It is then cooled, screened into five sizes, and each size treated by itself on the magnetic separator. The concentration is three tons into one, and the zinc concentrates contain 45% zinc. This machine is somewhat complicated and has therefore been recently replaced by a cross-belt machine (see § 590).

§ 579. PAYNE MAGNETIC SEPARATOR.—This is a machine with a revolving drum *EI* and a fixed electromagnet, of which *R* is the coil and *PP* the pole pieces (see Figs. 461*a* and 461*b*). The special features of this machine are that the

field is of uniform strength across the width of the pole pieces, and the lines of force are approximately normal to the surface of the drum. The uniformity of strength is obtained by sub-dividing the pole pieces by means of little iron plates *a*. These plates are adjustable on the bolts *b*, and by spacing them farther apart near the inner edges of the pole pieces, the added reluctance of the air gaps thereby produced prevents a greater density of magnetic lines on the inner edges of the pole pieces, and at the same time causes the lines of force to pass out through the drum *E* approximately normal. The ore is fed as shown, upon the top of the drum, and the non-magnetic particles fall off as the drum revolves, while the magnetic particles adhere as long as the pole pieces remain concentric to the drum, and then, as the pole pieces curve inward from the drum, the strength of the field diminishes, and the magnetic particles are thrown off tangentially by centrifugal force. The ore being fed only along those portions of the drum surface which are opposite the pole pieces of the electromagnet where the lines of force are approximately normal, the formation of clots or bunches of ore, which increase the difficulty of securing a clean action, is in this way avoided, and the magnetic particles attach themselves in positions which favor the free discharge of the non-magnetic particles.

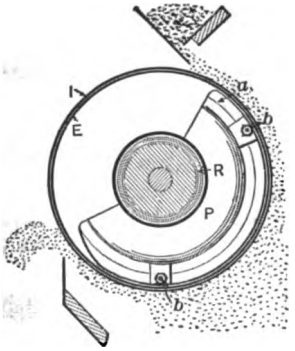

FIG. 461*a*.—CROSS SECTION OF THE PAYNE MAGNET AND DRUM.

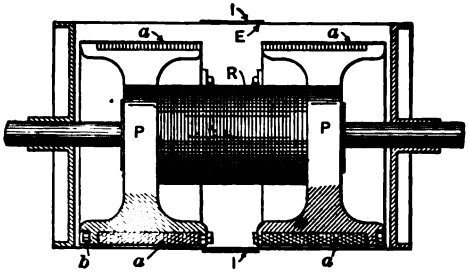

FIG. 461*b*.—LONGITUDINAL SECTION.

A separator of this form with two drums, one above the other, is used at Mill 93 for separating roasted limonite ore from zinc ore. The upper drum removes the tailings and the lower drum separates the residue into heads and middlings. The material treated ranges from 6 mm. to 0, and the capacity of the machine is 5 tons per hour. The two drum machine is run at a higher speed and makes a somewhat more efficient separation than the single drum machine which was formerly used.

Another form of this machine has a second electromagnet outside the drum, the pole pieces of which are concentric with the drum. Instead of the second magnet, simply an armature *A* may be used, as shown in Figs. 462*a* and 462*b*. This makes an almost continuous circuit of iron except for two short air gaps, and consequently gives a much stronger field suitable for the weakly magnetic minerals.

§ 580. THE WENSTROM MAGNETIC SEPARATOR.—In this machine, (see Figs. 463*a* and 463*b*) the revolving drum *E* is made up of alternate magnetic and non-magnetic bars, parallel to the axis. Within the drum and placed eccentrically to it is a fixed electromagnet *A*. This magnet is a cylinder a little more than one-half the diameter of the drum, with four circumferential grooves in it, in which the coils are so wound that the ridges of iron between them are of

alternate polarity, north and south. The magnetic bars in the drum *E* are cut away so that one bar has projections extending toward all the north pole ridges of the magnet, while the next bar has projections toward all the south pole ridges. The bars are, therefore, practically prolongations of the pole pieces. The ore is fed upon the top of the drum, and the non-magnetic particles fall off just as soon as the drum has revolved sufficiently for them to do so, while

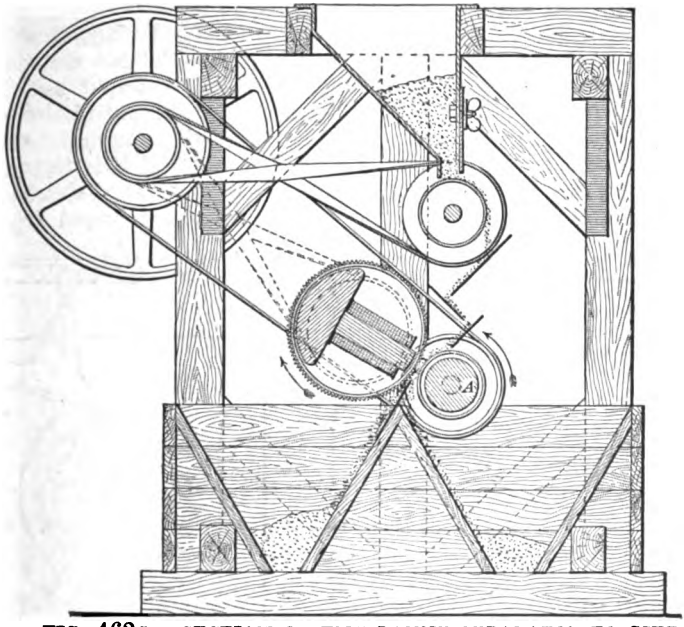

FIG. 462*a*.—SECTION OF THE PAYNE SEPARATOR TO GIVE A STRONG FIELD.

the magnetic particles are carried around underneath, until, owing to the eccentricity of the drum and the magnet, the attracting force becomes so weak that they also fall off into a separate compartment.

This is the leading machine in Sweden, and it has found quite an extensive use in this country. It is especially adapted to treating coarse stuff which is not

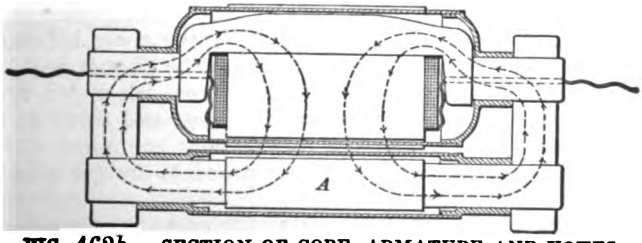

FIG. 462*b*.—SECTION OF CORE, ARMATURE AND YOKES.

necessarily dry. Two sizes of it are made, one with a drum 27 inches in diameter and 24 inches face, which will treat 5 tons per hour of stuff with 4 inches maximum size, using 15 amperes with 110 volts, and one with a drum 20 inches diameter and 15 inches face, which will treat 3 tons per hour of stuff with about 1½ inches maximum size. A machine of the larger size used at the Dannemora mines, Sweden, yields coarse concentrates running 59% iron and fine con-

centrates, running 45% iron. The cost of the magnetic treatment is 9.8 cents per ton, whereas hand picking of the same material cost 32.6 cents per ton, and 30% more concentrates are saved in the former case. For a machine to treat 5 tons of fine ore per hour, 1½ horse power is required to furnish the current, and ½ horse power to revolve the drum. For a small machine, 15 pounds of copper wire are required for each groove and a current of 10 amperes with 35 volts is used. The drum makes 30 revolutions per minute.

In using one of these smaller size machines at the Michigamme Iron Mines at Lake Superior, better results were obtained where the ore was sized previous to magnetic treatment. On stuff below ¼ inch in diameter, it was found better not to feed on top of the drum, but rather to carry the ore to the separator by a belt on an inclined plane near enough so that the magnetic particles were attracted. The reason for this is that with fine material it is impossible to put the stuff on the drum in a sufficiently thin sheet to allow of a good separation, as the mineral and the rock overlying one another are bound together. The

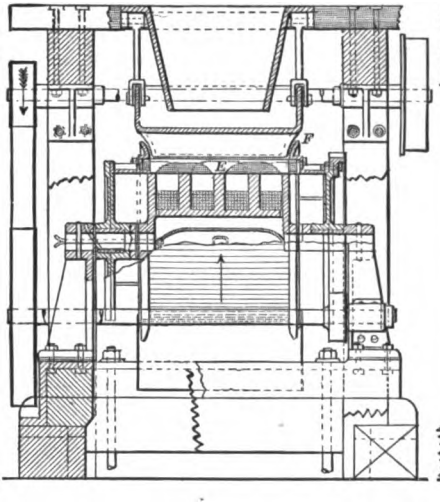

FIG. 463*a*.—LONGITUDINAL SECTION OF WENSTROM MAGNETIC SEPARATOR.

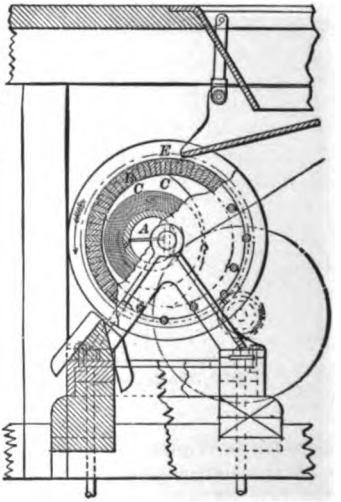

FIG. 463*b*.—CROSS SECTION.

greater the strength of current, and the greater the space between the ore and the drum, the richer will be the concentrates, and the cleaner will be the tailings. Ore containing 52% iron and 0.224% phosphorus, when fed upon the drum, gave concentrates which contained 58 to 60% iron and 0.215 to 0.180% phosphorus, but when fed from a belt the concentrates contained 67.07% iron and 0.060% phosphorus. A few analyses of the products are given in Table 355.

TABLE 355.—PRODUCTS OF WENSTROM SEPARATOR.

Mine.	Crude Ore.		Concentrates.		Tailings.	
	Iron. Percent.	Phosphorus. Percent.	Iron. Percent.	Phosphorus. Percent.	Iron. Percent.	Phosphorus. Percent.
Beach Glen, New Jersey	53.73	0.023	61.53	0.006	3.25	.....
Chateaugay Ore & Iron Co., N. Y.	40.99	.....	59.80	.....	1.62	.....
Port Henry, N. Y., Witherbee, Sherman & Co., New Bed	41.6	.....	64.0	.....	15.10	.....
Ditto, Old Bed	59.1	1.249	61.8	0.847	14.3	4.835

§ 581. THE BUCHANAN MAGNETIC SEPARATOR.—This consists of two rolls *AA* of iron which revolve on journals, carried on the ends of two horseshoe electro-magnets *B* (see Fig. 464). These are wound so that one roll is supported on two north poles, and the other roll on two south poles. The rolls are hollow and the space between them is adjustable. Ore is fed on top of each roll, and as the rolls revolve toward one another, the non-magnetic particles fall down through into the chute *D*, while the magnetic particles adhere to the rolls until they have passed out of the magnetic field, when they too fall off into the chutes *CC*. A brush or a scraper helps in this. A suitable arrangement of partitions allows a middlings product to be made if desired. The circumferential velocity of the rolls is 150 feet per minute, and material up to 3 inches in diameter may be treated.

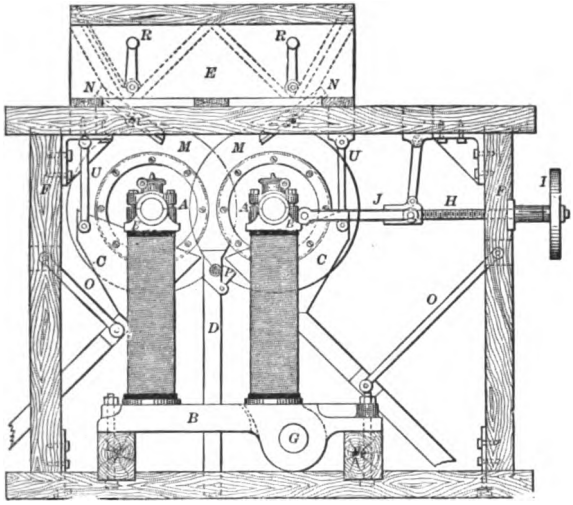

FIG. 464. — CROSS SECTION OF THE BUCHANAN MAGNETIC SEPARATOR.

A test on 773 pounds of Beach Glen ore, containing 45.71% iron, yielded 535 pounds of concentrates containing 62.04% iron, and the balance, tailings, carrying 7.94% iron. The time of treatment was 3¾ minutes, which is at the rate of 6⅛ tons per hour. Comparison with jigs at the Croton Iron Mines gave the results shown in Table 356.

TABLE 356.—CONCENTRATES OF CROTON IRON ORE.

	Buchanan Separator.			Buchanan Separator.		
	Raw Ore.	Concentrates.	Tailings.	Raw Ore.	Concentrates.	Tailings.
Iron, %	37.968	64.554	13.207	31.28	62.56	4.66
Silica, %	29.30	5.350	50.20	35.50	6.825	58.05
Phosphorus, %	0.383	0.050	0.492	0.271	0.058	0.527
Sulphur, %	0.522	1.253	0.224	0.784	1.320	0.945
	Coarse Jigs.			Fine Jigs.		
Iron, %	36.48	58.78	22.16	36.48	65.56	14.31
Phosphorus, %	.....	0.129	.....	.....	0.047	.....
Sulphur, %	.....	0.83	.....	.....	0.97	.....

A modified form used at the Hibernia concentrating plant had non-magnetic belts covering the rolls instead of feeding the ore directly on the iron. The capacity of a separator at this plant was from 100 tons to 150 tons of raw ore per day.

At Mill 90, a modified form treats ore which has passed through a trommel, varying from ¼ inch (6.35 mm.) to 20-mesh, and makes three products of which the middlings are re-crushed. The ore contains 25% iron and 1% phosphorus. The concentrates have 61% iron and 0.1 to 0.3% phosphorus. The tailings run from 11 to 17% iron.

§ 582. SIEMENS MAGNETIC SEPARATOR.—This is a hollow, revolving drum, made up of annular wrought iron discs, separated by brass annular discs of

slightly less outside diameter than the iron discs. The discs are held together by a set of longitudinal iron strips which cover the whole cylindrical surface of the drum, and are in contact with all the iron discs. Upon the periphery of the brass discs and beneath the iron binding strips, insulated copper wire is wound, the number of turns increasing from the head end toward the tail end. A pair of iron discs with the binders and the coil form a horseshoe magnet with its poles pointing inwards. By mounting this drum on an incline and passing ore through it, as in a trommel, the magnetic particles are attracted and carried to the top, where they are scraped off and removed by a conveyor, while the non-magnetic particles pass straight through. The drum is 1 meter long and 0.7 meter in diameter, and its axis is inclined 10° to the horizontal. It revolves 15 times per minute. Its capacity is about 1 ton per hour. In treating stuff containing 60% magnetic oxide and 22% zinc oxide, it made concentrates containing 8 to 12% magnetic oxide and 50% zinc oxide, and tailings with only 4 to 8% of zinc oxide.

§ 583. THE DELLVIK-GRÖNDAL SEPARATOR is shown in Fig. 465, in section. A revolving cylinder *AB* consists of rings of cast iron with the spaces between containing the wires for the electric current which magnetizes the rings so that the strength of each is a little greater than that of the one above. The cylinder *CC* is of wood studded with soft wrought iron pegs, a ring of pegs being opposite each ring of *AB*. This cylinder revolves three times as fast and in an opposite direction from *AB*.

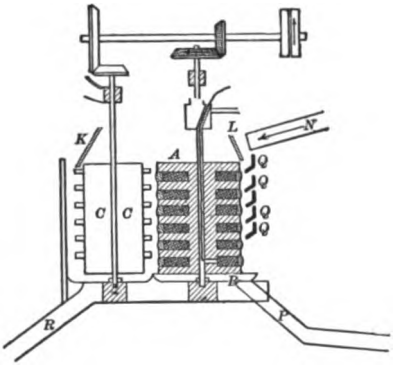

FIG. 465.—SECTION OF THE DELLVIK-GRÖNDAL MAGNETIC SEPARATOR.

The action of the machine is as follows: Pulp fed from the launder *N*, falls down in front of the magnetic rings, its distribution being aided by the launders *QQQQ*, and the clear water pipe *L*. The non-magnetic particles which escape the lowest ring pass off in the launder *P*. The magnetic particles stick to the cylinder and are carried around until they are adjacent to the wooden cylinder *CC*, when the induced magnetism on the pegs causes the magnetic particles to hop over to the pegs, whence they either fall off or are washed off as soon as the revolution of the cylinder carries them out of the magnetic field. The machine is especially adapted to the treatment of fine stuff below 12 mesh.

As used at Pitkäranta, Finland, a machine treats about 45 tons per day of low grade magnetic iron ore mixed with sulphides of copper and zinc, and finely disseminated. The feed is below 1 mm. and seldom contains over 25% iron, and often below 20%. The concentrates contain 65 to 71% iron, and the tailings run 1 to 1½% magnetite. One-half of a horse power is required to revolve the cylinders, and the magnets use 8 amperes with 35 volts.

II. MAGNETIC SEPARATORS WITH CONVEYING BELTS.

§ 584. WETHERILL'S MAGNETIC SEPARATORS.—The leading idea of these machines is to secure a very strong magnetic field by concentrating the lines of force as far as possible. This is done by placing the two poles of the magnet facing one another with a minimum air gap between them, and by beveling down the pole pieces at their ends. These machines were the first ones which,

to the best of the author's knowledge, commercially treated weakly magnetic materials. Other machines had previously treated only natural magnetite, or iron ore that has been changed to magnetic oxide by roasting. There are three forms of Wetherill separators used in Mill 92.

§ 585. *The Wetherill Parallel Separator.*—(See Figs. 466*a* and 466*b*.) This form is used for the No. 1 separators in Mill 92. It consists of a flat

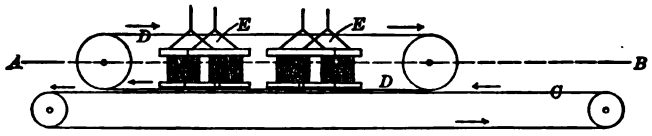

FIG. 466*a*.—ELEVATION OF THE WETHERILL PARALLEL SEPARATOR.

FIG. 466*b*.—PLAN ON *AB*.

Robins patent rubber conveyor belt *C*, 12 inches wide and 15 feet 4 inches long between the centers of the pulleys. This belt runs horizontally at a speed of 100 feet per minute, and the ore is fed upon it in an even layer about ¼ inch thick. At a distance of ⅜ inch above the top side of the belt is the underside of a second belt *D*, parallel to the former and running in the same direction. This second belt is 16 inches wide, making it extend about 2 inches further to each side than the first. It runs at a speed of 125 feet per minute. Between the upper and under parts of the second belt are two electromagnets *E* of horseshoe pattern, with the poles *F* facing one another. The cores *G* are of soft iron and are 8¾ inches long, 10¾ inches wide, and 2½ inches thick. They are wound with 950 turns of wire, carrying 6 to 8 amperes with 52 volts. The pole pieces F are of soft iron, 7⅝ inches long, 10¾ inches wide and 2½ inches thick, and are placed ⅜ inch apart. The longest dimension of the poles is placed at an angle of 40° with the direction of the belts, so that particles lifted by the magnets follow the oblique line of the poles to the edge of the upper belt, and then drop into a chute beyond the margin of the lower belt. This machine treats stuff that has passed through a trommel with holes 0.058 inch (1.5 mm.), and the heads which are attracted against the second belt are clean franklinite and go to concentrates bins, while the tailings are sized for further treatment. The capacity of a single machine is about 30 tons in 24 hours.

§ 586. *The Wetherill Horizontal Separator.*—These are used for the No. 2, 3, 4, 5 and 6 magnetic separators of Mill 92, treating five sizes of stuff ranging from 0.058 inch (1.5 mm.) down to 0.01 inch (0.25 mm.). A machine is built double, as shown in Figs. 467*a* and 467*b*. The ore is fed from hoppers *E* by feeders *F* over the chutes *G* upon the canvas belts *D*, which run around the polished ends of the pointed pole pieces *C*. As the ore rounds these, the tailings or non-magnetic portion, falls immediately into the receptacle *L*, while the heads or magnetic part adheres to the belt a little longer, and finally falls into *M*. Adjustable shutters *H* divide between the heads and tailings. The arrangement of the coils *A* and the yokes *B*, are shown in the plan. The adjustments are in the position of the shutters *H*, the speed of the canvas belts *D*, the distance between the pole pieces, and the strength of the current in the coils. The cores are of soft iron 8.6 inches long, 10¾ inches wide and 2½ inches thick. They are wound with 950 turns of wire. The pole pieces

are 15½ inches long, 10¾ inches wide and 2½ inches thick. This increased length of the pole pieces over the width of the cores makes a total lateral extension toward the other side of 4½ inches and making an air gap of 0.92 inch, which may be increased or diminished. This gives a field of intense magnetic action 10¾ inches long and 0.92 inch wide, and it is in this space that the

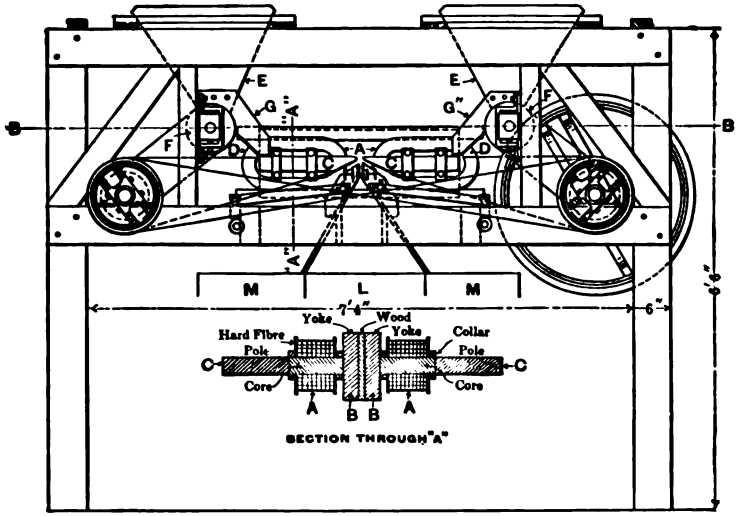

FIG. 467*a*.—SIDE ELEVATION OF THE WETHERILL HORIZONTAL SEPARATOR.

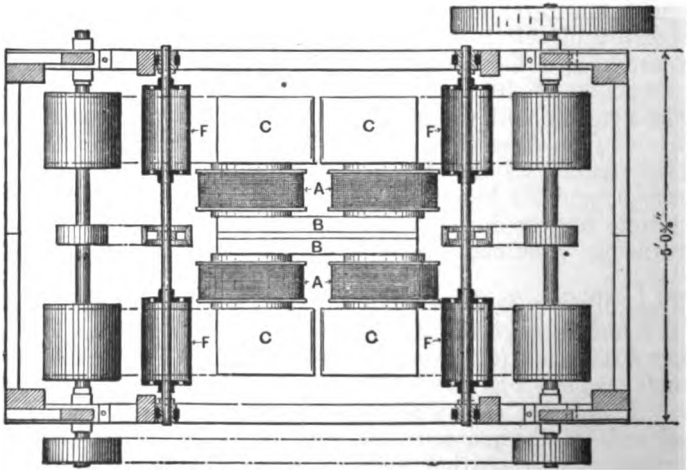

FIG. 467*b*.—SECTION THROUGH *BB*.

whole work of the machine is done. The ends of the poles are beveled almost to edges, thereby forming a wedge with an angle of 27°, the tips of which are rounded with a radius of ⅛ inch. This is done for two purposes. First, the beveling concentrates the lines of force somewhat, and thereby makes a stronger

field. Second, it allows the ore to be delivered directly into the strongest part of the field. When a broad pole piece which was not of pointed form, was tried, it was found that the particles of weakly magnetic material started to drop at the upper edge, where the magnetic lines were further apart, and acquired so great a velocity by the time they reached the strongest part of the field that they dropped through the field without being caught. The layer of ore fed on the canvas belt varies from $\frac{1}{8}$ to $\frac{5}{32}$ inch thick. Three separators are placed in series, the tailings of the first going to the second, and those of the second to the third, and they make clean heads of franklinite and final tailings rich in willemite, which are further treated by jigs. The capacity of the machine ranges from $1\frac{1}{2}$ to 3 tons per hour, and varies with the speed of the belts, and the material treated. The current used is 6 to 8 amperes with 52 volts for each of the first two magnets, and 22 amperes with 52 volts for the third. In some cases a single machine is used, corresponding to one-half the machine shown in Fig. 467*b*.

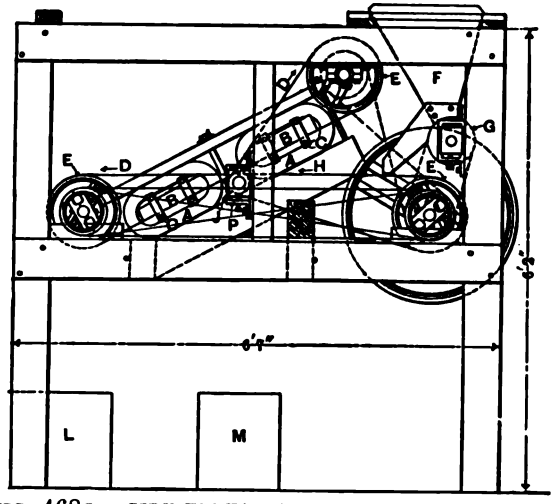

FIG. 468*a*.—SIDE ELEVATION OF THE WETHERILL INCLINED MAGNETIC SEPARATOR.

§ 587. *Wetherill's Inclined Magnetic Separator.**—A double machine used in Mill 92 for the No. 7 magnetic separators treating stuff below 0.01 inch (0.25 mm.), is shown in Figs. 468*a*, 468*b*, and 468*c*. The feeders *G* feed the ore from hoppers *F* to the horizontal canvas conveying belt *H* in a layer $\frac{1}{8}$ to $\frac{3}{16}$ inch deep. This belt, passing over a wooden roller *J*, the height of which is adjustable, delivers the ore as nearly as possible to the field of greatest strength. The non-magnetic particles pass over the pulley *J* into the receptacle *M*, while the magnetic particles are attracted by the magnets against either of the canvas belts *D*, which pass around the ends of the pole pieces and the pulleys *E*, in the directions indicated by the arrows. The magnetic particles thus pass through between the poles, and those on the left hand belt

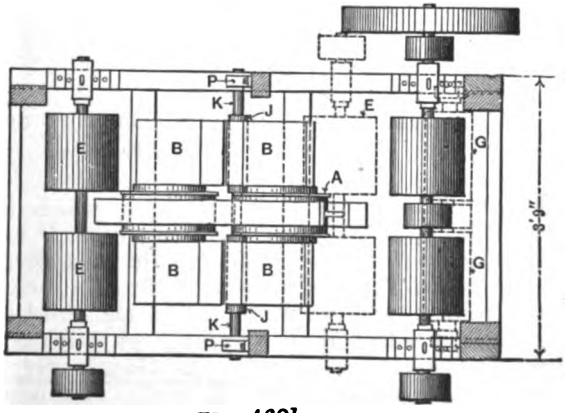

FIG. 468*b*.—PLAN.

* This and the two preceding machines just described as being used in Mill 92 have recently all been replaced by a cross-belt machine, called the Rowand magnetic separator, which is much like the Conkling (see Fig. 469) in principle, except that there are magnets both above and below the distributing belt and the poles are rounded, both of which changes give a stronger field.

are conveyed away directly by it in a horizontal direction to the receptacle *L*, while those on the right hand belt cling to it and go up the slope of 54° into the weaker part of the field, when they tumble back and their momentum carries them to join the other particles on the left hand belt. The plane of each of the magnets is inclined 27° from the horizontal, and the plane of the upper magnet is 1.2 inches above that of the lower. The magnets are practically two bar electromagnets, placed side by side, so wound as to bring opposite poles together. This makes a magnetic circuit with two air gaps in it, and each air gap is used for treatment. The cores are of soft iron 8.6 inches long, 10¾ inches wide and 2½ inches thick, and are wound with 950 turns of wire *A*, carrying a current of 6 to 8 amperes with 52 volts. The pole pieces *B*, are 15½ inches long, 10¾ inches wide and 2½ inches thick, the excess of width over that of the core being all on the inside, which cuts the length of the air gap down to about 0.92 inch. The pole pieces are made adjustable so that the length of the air gap may be varied. Other adjustments are: in the distance of the feeding belt beneath the poles and the strength of the current in amperes. These machines differ from the preceding in that the magnetic par-

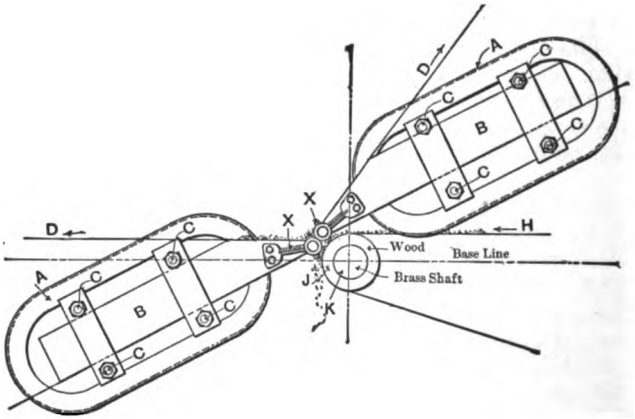

FIG. 468*c*.—ENLARGED ELEVATION OF POLE PIECES AND BELTS.

ticles are lifted from their associates, which is more advantageous for the finer sizes, since the two discharging belts *D* are never smeared with gangue dust, which would be carried into the concentrates, while the feeding belt *H* is so smeared. They are mounted three in series, the tailings of the first and second being re-treated on the sceond and third respectively. They make clean franklinite heads and final tailings of willemite and zincite, which are also clean zinc ore. Their capacity is 3½ tons per hour. Where a stronger field is required, a single machine is used. This is made by putting in a yoke instead of two of the pole pieces, which makes but one air gap in the circuit instead of two. This form, when used for hematite ore, requires 8 amperes with 22 volts to treat 1½ tons per hour. To make a clean separation, the ore has to be passed through three times, or over three successive machines.

§ 588. *Results of Tests of Wetherill Magnetic Separators.*—In addition to the work already mentioned in Mill 92, tests have been made on various other ores. Clinton fossil hematite ores from the Birmingham district, Alabama, when dried and divided into three sizes (through 8 on 15, through 15 on 40, and through 40 mesh), gave results shown in Table 357.

TABLE 357.—CLINTON FOSSIL ORE.

	Percentage by Weight.	Iron.	Silicious Mattes.
Original ore	100%	48.03%	25.20%
Heads	57%	57.10%	13.10%
Middlings	28%	46.20%	25.40%
Tailings	15%	10.00%	70.80%

These results compare very favorably with those obtained by roasting the same ore to magnetic oxide, and then separating it by magnets. Other tests are shown in Tables 358 to 361.

TABLE 358.—BROWN HEMATITE FROM IRON GATE, VA., ALLEGHANY IRON CO.

	Percentage by Weight.	Iron.	Silica.
Original Ore	100.0%	43.08%	31.29%
Concentrates	63.4%	51.04%	11.24%
Tailings	36.6%	31.74%	66.00%

TABLE 359.—BROWN HEMATITE (WASHER-TAILINGS), BARREN SPRINGS, VA.

	Percentage by Weight.	Iron.	Silica.
Original ore	100%	33.03%	29.23%
Concentrates	30%	53.14%	7.48%
Tailings	70%	23.98%	39.58%

TABLE 360.—JIGGED ZINC ORE (LIMONITE AND CALAMINE) WYTHE LEAD & ZINC CO., AUSTINVILLE, VA.

	Percentage by Weight.	Iron.	Zinc.
Original ore	100%	18.60%	29.57%
Concentrates	33%	49.45%	5.58%
Tailings	67%	3.41%	41.40%

TABLE 361.—MANGANESE ORE (CULLS FROM WASTE HEAP, CONSISTING OF PARTICLES OF CHERT IN A MATRIX OF SILICIOUS PYROLUSITE), CAVE SPRINGS, GA.

	Percentage by Weight.	Manganese.	Silica.
Original ore	100%	28.78%	43.00%
Concentrates	52%	40.91%	20.85%
Tailings	48%	15.54%	67.30%

§ 589. THE CONKLING DRY MAGNETIC SEPARATOR.—The principle of this is shown in Fig. 469. The ore is fed through the hopper upon the distributing

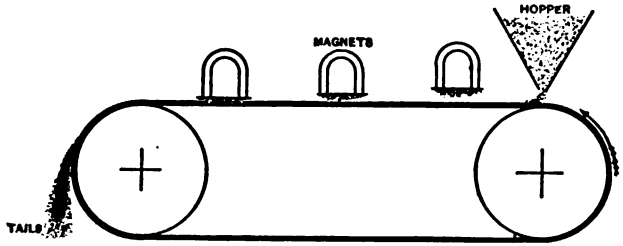

FIG. 469.—PRINCIPLE OF THE CONKLING DRY MAGNETIC SEPARATOR.

or conveying belt, which moves in the direction indicated by the arrow. As it passes under the magnet, the magnetic particles are lifted up against the

underside of belts running at right angles to the distributing belt and are thus drawn to one side while the non-magnetic particles continue on and are delivered over the end of the belt. The strength of the magnets and the distance between the cross belts and the distributing belt may be varied. Some results of tests by this machine on separating magnetite from gangue are given in Table 362.

TABLE 362.—CONCENTRATIONS BY THE CONKLING DRY MAGNETIC SEPARATOR.

Ore From	Crude Ore.		Concentrates.			Tailings.	
	Iron. Percent.	Phosphor's Percent.	Iron. Percent	Phosphor's Percent.	Silica. Percent	Iron. Percent.	Phosphorus. Percent.
Port Henry, N. Y., New Bed	53.80	0.010	70.80	0.006	.....	21.00	0.10
Platt Mine, N. J.....	62.04	1.146	70.29	0.158	.....	Not determined	Not determined
Mt. Hope Mine, N. J.....	58.00	0.100	79.47	0.022	1.27	"	"
Lehigh Mountain, Pa.....	39.00	0.038	66.24	0.005	.....	"	"

§ 590. A MAGNETIC SEPARATOR USED AT MONTEPONI, SARDINIA, is very similar to the Conkling Dry Separator. The poles of the magnet are bent around so as to come quite near together. The conveying belt is 20 to 50 mm. below the poles, and moves at a speed of 0.5 meter per second. The stuff treated varies from almost pure limonite (with 4% zinc), to stuff with almost no iron at all. The separator is applied to material up to 10 mm. in size after roasting. The current varies from 0.4 to 2 amperes with 10 to 50 volts. A single magnet treats 2 to 3 cubic meters of ore in 10 hours. This separator is now used in preference to the Ferraris separator (see § 578).

§ 591. THE CONKLING WET MAGNETIC SEPARATOR.—This differs from the dry separator in that the distributing belt is placed on an incline; there are no cross belts, and the magnets are placed beneath the belt, that is, between the ascending and descending side. Ore is fed upon the belt near the lower magnet. A stream of water running down the belt carries the non-magnetic particles off at the lower end, while the magnetic particles are held against the belt by the attraction of the magnets, and are carried up by the belt and over the upper end. There is more or less loss in the slimes carried off by the water.

An average of seven months' work at the Tilly Foster Mine, in 1890, showed that out of 3,009 tons treated per month, 1,039 tons of concentrates were obtained, or 1 ton of concentrates from 2.89 tons of ore. The average total cost of milling per ton of concentrates was $2.25, of which $1.26 was for labor. The average cost per ton of raw ore varied from $0.189 to $0.253. The percentage of iron in the raw ore varied from 24.96 to 28.57%; that in the concentrates from 47.40 to 51.04%, and that in the tailings from 10.21 to 11.53%.

§ 592. THE HEBERLI WET SEPARATOR in one of its forms is shown in Figs. 470*a*, 470*b*, and 470*c*. It consists of a box filled with water, in which is the belt *BB* moving over the pulleys *cc'*, and the electromagnets in a water tight case as shown. The ore, best below 30 mesh, is fed in with water at *A*; the non-magnetic particles fall down to the right of the deflector into the hopper *G* and pass out through *H*; the magnetic particles are attracted against the belt and are carried down by it until they are below the magnetic field when they fall into the hopper *E* and pass out through *F*. A machine with a belt two feet six inches wide is capable of treating 35 tons of crude ore per day.

EDISON MAGNETIC SEPARATOR FOR FINE MATERIALS is used as No. 4 magnet in Mill 91, to treat the fine dust taken out in the dusting chamber. As shown in Figs. 471*a* and 471*b*, there are three horseshoe magnets with poles at *B*, *C* and *D*. The fine dust is fed by the hopper *A* in front of the lowest magnet *B*, which attracts the magnetic particles against the belt *E* while the non-magnetic

particles fall down. As the belt *E* travels upward, the magnetic particles are worked in a zigzag course diagonally along the magnet *B*, thence along *C* and finally along *D*, which extends farther to one side than *B* or *C*, and delivers concentrates into the buckets *F* attached to the belt which carry them up over to the rear as shown. The zigzag course of the grains serves to eliminate particles which would otherwise be retained by the magnetic particles in stuff so fine as this. This separator yields magnetic concentrates which are a finished product, and tailings which are mainly apatite, and are sold for paint.

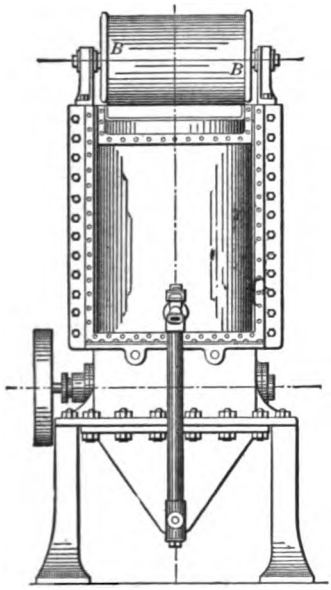

FIG. 470*a*.—SIDE ELEVATION OF THE HEBERLI WET SEPARATOR.

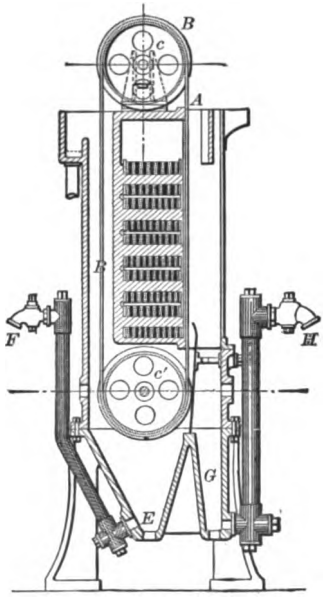

FIG. 470*b*.—VERTICAL CROSS SECTION.

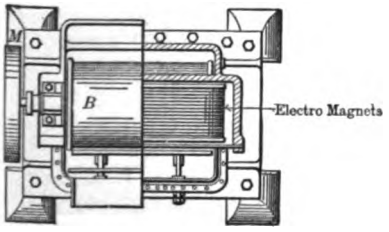

FIG. 470*c*.—HALF PLAN AND HALF SECTION.

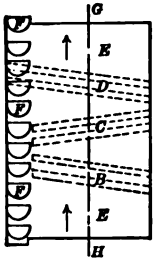

FIG. 471*a*.—FRONT ELEVATION.

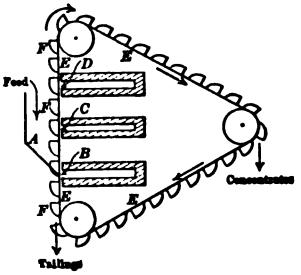

FIG. 471*b*.—VERTICAL SECTION ON *GH*.

EDISON'S SEPARATOR FOR FINE STUFF.

§ 593. THE KESSLER MAGNETIC SEPARATOR has been used to some extent abroad. It consists of a horizontal chain belt of iron, which at one end passes over a wooden pulley, and at the other end over one of solid iron. The latter is magnetized by an electromagnet. The chain is thereby made magnetic with strength diminishing toward the wooden pulley. Ore fed on at the iron pulley drops the non-magnetic particles immediately, the weakly magnetic particles next, while the strongly magnetic particles hold on until they almost reach the wooden pulley.

§ 594. A MAGNETIC SEPARATOR FORMERLY USED AT PRZIBRAM, had a horizontal belt which carried the ore along beneath two sets of electromagnets. These magnets were mounted on overhead wheels which ran on rails, and they had a reciprocating motion back and forth. When they were directly over the belt the current was on, and magnetic particles were attracted. When they were at one side the current was off and the load of magnetic particles was allowed to fall. Blende and siderite were roasted to zinc oxide and magnetic oxide and separated by this machine at the rate of 150 kilos per hour.

§ 595. THE HUGHES DAVIOT ELECTROMAGNET, used at Laurium, in Greece, is suspended by a universal joint and is moved by hand over a pan of ore. When a load of magnetic particles has become attached to it, it is swung to one side,

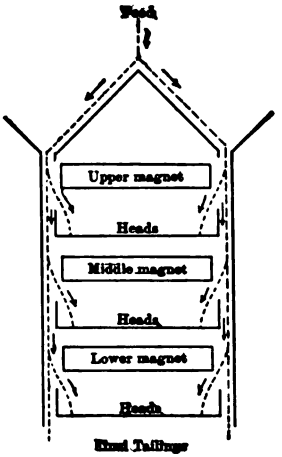

FIG. 472*a*.—SKETCH OF THE NO. 1 MAGNETS IN MILL 91.

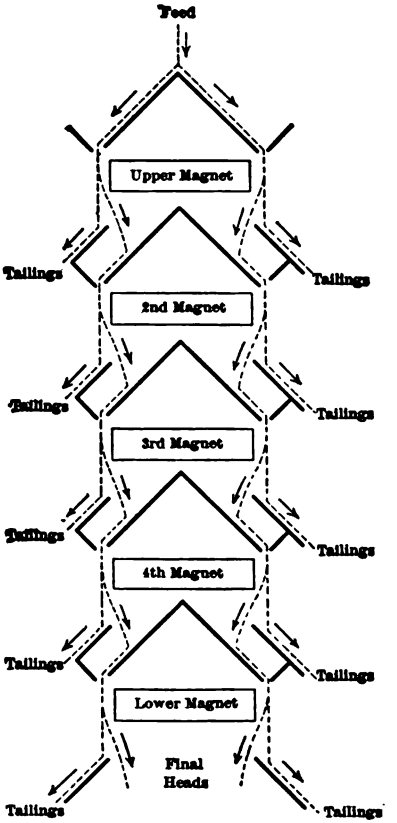

FIG. 472*b*.—SKETCH OF THE NO. 3 MAGNETS IN MILL 91.

the current cut off and the load dropped. This forms a species of hand sorting by the use of a powerful controllable electromagnet. It uses 2½ to 3 amperes current with 40 volts.

III. SEPARATORS WITH THE ORE FALLING IN FRONT OF MAGNETS.

§ 596. THE EDISON MAGNETIC SEPARATOR.—This is simply a plain bar electromagnet before the poles of which the ore falls in a thin sheet, and the magnetic particles are thereby deflected to one side, while the non-magnetic particles

fall vertically. These machines are used for the No. 1, 2, and 3 magnetic separators in Mill 91. The No. 1 magnets are grouped in sets of three, one above the other, as shown in Fig. 472*a*. Each magnet is 12 inches long between the poles, 4 feet 6 inches wide and 4 inches thick. Cast iron is used for the cores, and in this case is as good as wrought iron, since the cores are never saturated. The cores are wound with No. 4 copper wire, and the upper magnet of a set has the fewest turns and the lowest the most, thereby causing a proportional increase in magnetic force. The three magnets of a set are wired in series, but the different sets are wired in parallel. A set is supplied with 15 amperes and 80 volts. One set treats 16 tons per hour of stuff which has passed through a 0.060-inch (1.52-mm.) slot, and carries 20% iron and 0.70 to 0.80% phosphorus. This is nearly two tons per hour per foot of face of upper magnet. The tailings of the upper magnet contain 7% iron, and are treated by the middle magnet. The tailings of the middle magnet contain 2½% iron, and are treated by the lower. The tailings of the lower magnet, amounting to 55% of the original ore, contain only 0.8% iron and are waste. The heads of the three magnets contain 40% iron and go to the drier.

The No. 2 magnets are wound and arranged in sets of three, like the No. 1 magnets, except that the cores are 8 inches long between the poles, 4 feet 6 inches wide and 3 inches thick. They are wound with No. 6 copper wire and a set uses a current of 10 amperes with 120 volts. Their capacity is ½ ton per hour per foot face of upper magnet. They are fed with the concentrates of the No. 1 magnets, after drying and re-crushing through a slot 0.020 inch (0.51 mm.) wide. The heads of all three magnets in each set contain 60% iron and go to a dusting chamber. The tailings of the lower magnet are waste.

In the dusting chamber the fine dust is blown out, the percentage of iron in the residue being raised thereby to 64%. This residue goes to the No. 3 magnets, arranged with five in a set, as shown in Fig. 472*b*. It will be seen that this differs from that of the No. 1 and No. 2 magnets in that it is not the tailings of a magnet but rather the heads, that are treated by the next magnet below. In this case, the magnets are all of the same strength. The cast iron cores are 4 feet 6 inches wide, 4 inches long between the poles and 2 inches thick. They are wound with No. 6 copper wire, and a set uses a current of 17 amperes with 100 volts. Their capacity is 400 pounds per hour per foot face of upper magnet. The tailings of the upper magnet are waste, while those of the other four are sent back and put with the main stream of ore to be re-crushed. The heads of the lowest magnet contain 67 or 68% iron and are finished products.

ROASTING FOR MAGNETISM.

§ 597. This is used to some extent upon ores containing iron which in their natural state are only weakly magnetic. By submitting them to a preliminary roasting, they become strongly magnetic and readily separated from their gangue or from some other valuable mineral, as the case may be.

The only strongly magnetic oxides of iron which can be produced for magnetic separation are, according to Wedding[9], Fe_3O_4 and Fe_6O_7. Fe_2O_3 is only weakly magnetic and FeO cannot be produced in practice. There are three methods of changing weakly magnetic iron ores into the magnetic oxides: (1) Simple heating at a high temperature expels some of the oxygen from Fe_2O_3 leaving Fe_3O_4 or Fe_6O_7. This is applicable to hematite and limonite ores, the heat also driving off any combined water that may be present. It is expensive for fuel, however. (2) Reduction at a red heat by means of solid carbonaceous matter or by reducing gases, usually hydrogen and carbon monoxide.

This is the commonly used process on hematites and limonites. (3) The decomposition of $FeCO_3$ by heat, CO_2 being driven off. This is applicable to spathic iron ores. It is not possible to get FeO in this way, since some of the O of the CO_2 combines with the FeO and forms Fe_3O_4 or Fe_6O_7. In the last two of the above cases the air must be kept out, since the oxygen of the air readily reacts with Fe_3O_4 and Fe_6O_7 to form Fe_2O_3, thus undoing all the work.

Of sulphide ores, pyrite (FeS_2) is only weakly magnetic, while pyrrhotite (Fe_7S_8) is strongly magnetic. By roasting pyrite under oxidizing conditions it is possible to drive off some of the sulphur as SO_2 and leave the magnetic sulphide. There is a tendency for some iron to be oxidized at the same time, however, which makes the process hard to regulate, unless some carbonaceous matter is added near the end of the roast to act as a reducing agent.

In roasting it is best to have the ore of a uniform size, in order that it may all be treated uniformly. Too coarse ore takes too long to treat. Too fine ore is hard to treat, owing to difficulty of passing gases through it. The best furnace for coarse ore is a shaft furnace gradually enlarging downward to allow for expansion of the ore and thereby give room for upward passage of gases. For fine ore a hearth furnace is required.

This process of roasting was tried on Alabama hematite ores by William B. Phillips.[25] He used a modified Davis Colby shaft furnace. The magnetization had to be very carefully performed in order to successfully reduce a lump all the way through and still prevent incipient fusion on the surface. The best size for treatment was found to be about 2 inches in diameter and the average temperature used was 1,100° F. The average ore contained 45% iron and 30% silica, and the concentrates obtained after roasting, crushing and magnetic separation, contained 58.9% iron and 11.5% silica.

§ 598. At Allevard, France[49], there is a plant which roasts spathic iron ore on a commercial scale. Shaft furnaces are used, one of which yields 25 metric tons of roasted ore in 24 hours, using 30 kilos of coal in the gas producer for each ton of ore roasted. A temperature of 1,000°C. is used. The ore loses 28% in weight, 2% of carbon dioxide remaining in the roasted ore. This is a case where roasting and magnetism are employed merely to save the iron, but as a rule, the process is too costly for simple iron ores, and is used only where the ore contains some other valuable mineral besides iron. The following instances are given of this latter case:

Mill 93 roasts tailings of jigs, containing limonite and smithsonite ranging from 6 mm. to 0, in common reverberatory furnaces, with grates 20 by 84 inches and hearths 7 feet wide and 8 or 9 feet long. The ore is heated to redness and then the limonite is reduced to magnetic oxide by the addition of fine coal to it. The charge of ore is 12,000 pounds; and of fine coal 1,200 pounds. The coal burned on the grate is 4,480 pounds per charge. Sixty minutes is required to bring it to redness and sixty more to effect the reduction. The ore is then cooled and separated by Payne separators. In nine months 1,415 tons produced 675 tons of heads carrying 50 to 55% metallic iron, and tailings, which contained most of the zinc and only 4 to 6% iron.

Mill 92 formerly employed a similar process before using the Wetherill process.

Tests have been made on tailings of Leadville, Colorado, mills containing pyrite and blende which cannot be separated by jigging. Some of the Anchor mill ore, containing galena, pyrite, blende and gangue, was heated in an iron pan in a muffle at a low red heat until all the flame of burning sulphur had disappeared. After cooling, the magnetic material (sulphide of iron, FeS) was removed by a magnet. The non-magnetic material was panned to make lead concentrates and the residue panned again to make middlings (zinc ore) and tailings. Results of a test by James W. Neill are given in Table 363.

TABLE 363.—TEST OF ANCHOR MILL ORE.

Material.	Percent of Total Ore.	Silver.		Lead.		Gold.		Zinc.	
		Assay in Ounces per Ton.	Percent of Total.	Assay in Percent	Percent of Total.	Assay in Ounces per Ton.	Percent of Total.	Assay in Percent	Percent of Total.
Original ore	100	15.4	100	14.5	100	Trace.	100	15.0	100
Magnetic concentrates	12.5	18.0	14.5	.....	.....	0.06	.....	4.9	4.1
Lead concentrates	22.0	34.6	49.4	57.0	86.5	.....	.....	14.2	20.8
Middlings	26.0	11.8	20.0	8.5	15.3	.....	.....	34.1	55.1
Tailings	25.0	5.8	9.3	.....	.....	.....	.....	13.0	20.0
	85.5		93.2		101.8				100.0

In this work the non-magnetic particles still contain all their sulphur and are not desirable for smelting. Gouyard[57] has tested such ores by roasting them down to 5 or 7% sulphur, getting most of the iron into the form of sesquioxide and then reducing it to the magnetic oxide. This requires a higher heat, and more of the lead goes with the magnetic portion than in the former case.

Ellis Clark[11] reports the separation of spathic iron ore from zinc blende at Przibram by roasting the ore (not over 1 mm. in diameter) in a small oven for an hour, and then sending it to a magnetic separator.

At Monteponi, Sardinia,[116] a large amount of spathic iron ore with carbonate and silicate of zinc, which had accumulated in wet concentration, is being worked up by the roasting and magnetic process. The ore is first mixed with 2% fine coal and heated to such a degree that the iron oxides contained are reduced sufficiently to become magnetic. It is then sized and separated by a magnetic separator (see § 590) into iron ore, zinc ore, and middlings to be roasted again. The furnaces used are of the revolving cylinder type, 32 feet 9 inches long, and 3 feet 3 inches inside diameter. Each furnace treats 12 tons in 24 hours, burning 2 tons of coal. The raw ore contains 26% zinc and 10% iron. The zinc concentrates contain 45% zinc. The concentration is a little over 3 tons of ore into 1 ton of zinc concentrates.

At Friedrichssegen, Rhenish Prussia,[45] the ore from hand picking, containing spathic iron and zinc blende, ranging from 40 to 120 mm. in size, is roasted to magnetic oxide in shaft furnaces with fine coke. A furnace treats 8,000 kilos per day and uses only 50 kilos of fine coke, the remainder of the heat being furnished by the sulphur in the ore. The roasted product is crushed to 5 mm. and sent to a magnetic separator. Ore from the washing which is below 6 mm. is roasted in reverberatory furnaces for about 1½ hours. Two furnaces in series treat 18 to 20 tons in 24 hours. The roasted product is all crushed through 4 mm. and separated magnetically. The magnetic machines make iron ore, which is a finished product, zinc ore, which has some of its gangue removed by washing, and middlings, which are re-treated. The results of the magnetic treatment are to treat 24 tons of roasted ore containing 12 to 15% zinc and 20 to 22% iron, and make 7 to 8 tons of zinc ore containing 33% zinc and 16 to 18 tons of iron ore containing 36 to 38% iron and 10% manganese.

At Maiern, Austria,[117] the problem and the method of treatment are similar to Friedrichssegen.

At Svärto, Sweden,[98] magnetite ore containing a high percentage of phosphorus is crushed to 1 mm. and separated magnetically. The iron ore obtained goes to market. The non-magnetic part is washed to remove the apatite, which is mixed with sodium carbonate and made into phosphate. There is really no roasting for magnetism here. The furnaces are used only in working up the apatite.

Pneumatic Concentration.

§ 599. Air may be used much in the same way as water, as a medium for sort-

ing grains of ore into grades according to their settling power. The conditions which point to the use of air for concentration are: (1) the removal of dust from natural or pulverized stuff by a blast of air; (2) the treatment of placer gold or ores in general, in districts where there is a scarcity of water.

There are three chief classes of apparatus for separating ores, that depend upon air as a medium:

I. Those using a continuous blast of air which acts on the particles and yields graded products.

II. Those which project the ore particles through air by a force other than an air blast, the heaviest grains going farthest, the other grains being graded according to their momentum.

III. Air jigs, or those which subject the ore in a bed to a series of upward, intermittent pulsations of air, the lighter particles rising to the top layer, the heavier particles settling beneath in the same manner as in the hydraulic jig, when run without suction.

I. AIR CONCENTRATORS USING A CONTINUOUS BLAST OF AIR.

§ 600. EDISON DUSTING CHAMBERS.—In Mill 91, a horizontal blast of air, under a pressure equal to 6 inches of water, is used to remove the finer, lighter portion of the gangue from the magnetic concentrates of the No. 2 or 8-inch magnets. These concentrates have been through a slotted hole 0.5 mm. wide, and contain magnetite, with apatite and fine calcium sulphate as chief impurities to be removed. They run 60% iron. The blowing apparatus (see Fig. 473) consists of three wide nozzles, *D*, *F*, *G*, delivering air streams 72 inches wide and 1 inch thick. They are placed one above another and connected to the same fan *K*. The ore is fed in front of the upper nozzle by a hopper *A*, a wide flue *B*, and by three little shelves *C*, called chokers, which break the force of descent and deliver the stream directly in front of the jet *D*. A large portion of the dust is blown into the dust chamber *E*, while the heavy material passes downward. In like manner it passes the other two jets *F* and *G*, losing some dust in front of each. The apparatus makes two products, the heavy which runs 64% iron and is mostly magnetite, and the light which is apatite and calcium sulphate, with some fine magnetite. The heavy product goes to the No. 3 or the 4-inch magnets, while the light goes to No. 4 magnet. This blowing is for two purposes: (1) to make clean heads by blowing out the apatite, and (2) to enable the No. 3 or finishing magnets to work more freely. The calcium sulphate comes from the water, which contains 120 grains to the gallon. When dried, it forms an elastic coating on the grains, and sticks tiny grains of gangue dust to the ore. To remove this the drier preceding the No. 2 magnets is heated to 200°F., by which means the coating becomes brittle, is broken off in transit, and readily blown away.

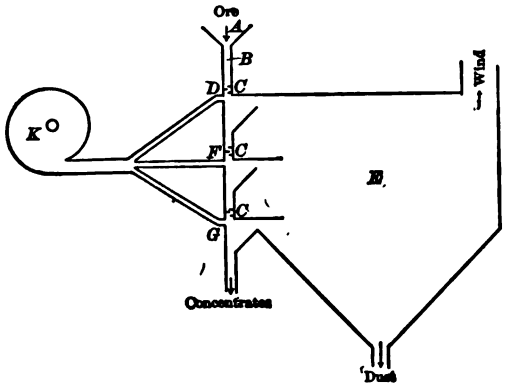

FIG. 473.—EDISON'S DUSTING CHAMBER.

§ 601. THE HOCHSTEDT APPARATUS, shown in Fig. 474, is of this class. It is used at the Rheinpreussen Colliery at Homberg on the Rhine, for blowing the

dust out of coal. The fine coal (7 mm. to 0 in diameter) is spread out and fed evenly by a roller feeder over a width of 2 m. A jet of air, *A*, 2 m. wide and 0.1 m. thick, from No. 1 fan blower, directed upward at an angle of about 32°, blows through the falling sheet of particles, removing the fine stuff. The air blast then passes up a branch discharge flue, *B*, inclined upward at an angle of 50°, and any particle that is heavy enough to fall out of the air current can do so and return to the heavy product. The rest goes over to dust chambers *E*. The falling sheet of particles passes by a second jet, A_1, 4 m. wide and 0.04 m. thick, furnished by No. 2 blower, and has the remaining fines taken out and sent through a second branch discharge flue, B_1, to the same dust chamber, *E*, from the outlet of which the air for the fans is drawn, thus making a continuous circuit. The fine coal is 30% of the whole and has a maximum diameter of 2 mm. The dust chamber costs $750 and the fans $600 each. The apparatus treats 500 tons of coal per day at a cost of 5½ cents per ton.

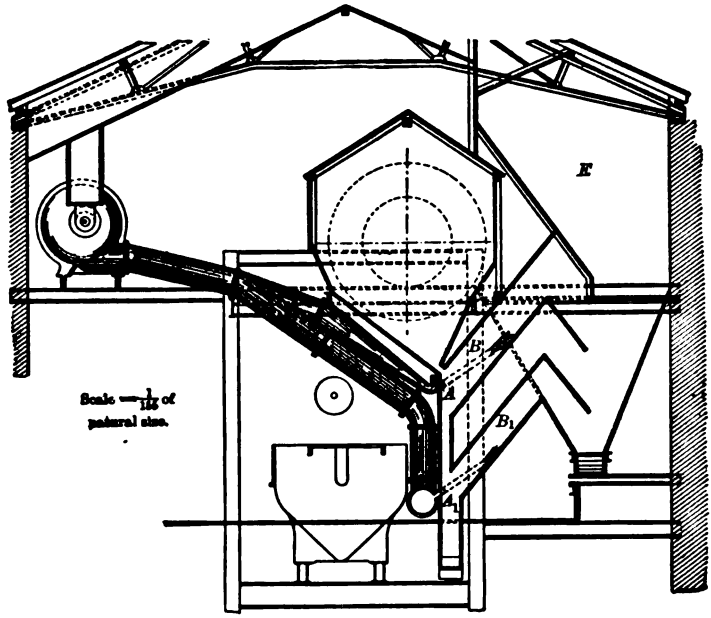

FIG. 474.—SECTION OF THE HOCHSTEDT APPARATUS.

At the St. Louis floor of the Anzin Company there is an apparatus very similar to the preceding.

Air has been used to some extent in this country for blowing dust out of coal. It is particularly advantageous to remove the dust before washing coal, as the dust hinders the washing of coarser sizes, increases the percentage of loss and adhering to the washed coal, prevents it from drying quickly.

Air is used in dressing asbestos at Thetford, Quebec,[169a] where rock that has been reduced in a Cyclone pulverizer, is passed over an 11-mesh shaking screen, and from the oversize of this screen, the fibrous portion is drawn away from the sand by an air current. There is a cover extending about two-thirds of the way from the upper to the lower end of the screen, and an inverted funnel, which connects with a suction fan, covers the lower end. The fan delivers the fibres into a settling chamber, the outlet of which is covered by a fine screen.

§ 602. CLASSIFIER AT ENGIS.—At Engis a horizontal covered box 8 m. long and 0.4 m. square, had a hopper on top at one end which dropped the ore in a regular

stream in front of a horizontal blast of air. The graded products were caught in a series of hoppers in the bottom of the box. The final dust was settled in a dust chamber. Its capacity was 25 to 27 tons in 12 hours. The apparatus was found to be very susceptible to slight changes in the pressure of the blast, which caused considerable change in the products and injured the classification. It was, therefore, given up at this place, although similar forms are used in certain places.

§ 603. A PNEUMATIC BELT CONCENTRATOR was tried at the mill of the Himmelsfürst mine in Saxony. It consisted of a horizontal endless belt, 1.91 m. long, 480 mm. wide, moving with a velocity of 110 mm. per second. Blasts of air were delivered across it from five flat tuyeres, each 250×65 mm. in section. They were placed 350 mm. from center to center. The five tuyeres blew off products which were caught separately. The sizes most satisfactorily treated on this machine were between 0.5 mm. and 1.5 mm. in diameter. On stamp stuff passing through 1.5 mm. and resting on 1 mm., results are reported as shown in Table 364.

TABLE 364.—ANALYSES OF PRODUCTS OF PNEUMATIC BELT CONCENTRATOR.

	Amount of Material. Percent.	Silver. Percent.	Lead. Percent.	Sulphur. Percent.	Zinc. Percent.
Feed	100.00	0.085	27.5	7.8	4
Product from first and second tuyeres	42.62	0.073	4.5	3.4	3
Marketable galena	24.59	0.162	71.5	15.1	3
Marketable galena	8.20	0.280	41.5	14.8	5
Middlings	24.59	0.115	9.5	7.3	5

The results, however, did not warrant its adoption.

§ 604. MUMFORD AND MOODIE'S SEPARATOR has a horizontal disc, *D*, revolving at high speed (see Fig. 475). Upon this in a steady stream from the hopper, *C*, is fed the dry ore to be separated. The particles are thrown out radially in a horizontal direction, but are stopped by an enclosing vertical, truncated cone, expanding slightly downward, which surrounds the disc. In the annular space between the disc and the cone is an upward current of air induced by fan blades, *A*, revolving with the disc. This current lifts the lighter portion and discharges it in an outer chamber, *E*, while the heavier particles fall in an inner chamber, *H*. After having dropped its charge, the air returns from the outer to the inner, as shown by the arrows, it being distributed to the pulp by the perforated plates, *G*, and acts over again. It is made in three sizes, 3½ to 6 feet in diameter, and they treat from 1 to 4 tons per hour. The advantage lies in its compactness for performing the duty of a screen, separating fine dust from coarser material. Two hundred are in use in England and America.

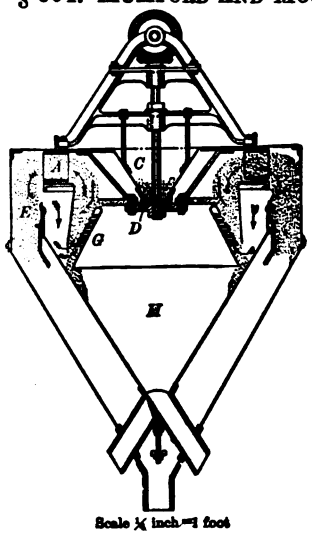

FIG. 475.—SECTION OF MUMFORD AND MOODIE'S SEPARATOR.

II. AIR CONCENTRATORS WHICH PROJECT THE PARTICLES BY A FORCE OTHER THAN AIR BLAST.

§ 605. THE PAPE-HENNEBERG SEPARATOR (see Figs. 476*a* and 476*b*) consists of a large pan 6 m. in diameter, with a series of concentric troughs, *c*. Suspended freely over the center of the pan is a disc 450 mm. in diameter, which revolves at

the high speed of 3,000 revolutions per minute. Over the revolving disc is a stationary disc or cover, *b*, 2 m. in diameter. Particles of ore from the two hoppers *a* and a_1, are fed near the center of the revolving disc and are thrown out radially by centrifugal force with high velocity against an inflowing current of air, which comes in all around under the edge of the stationary disc and is drawn

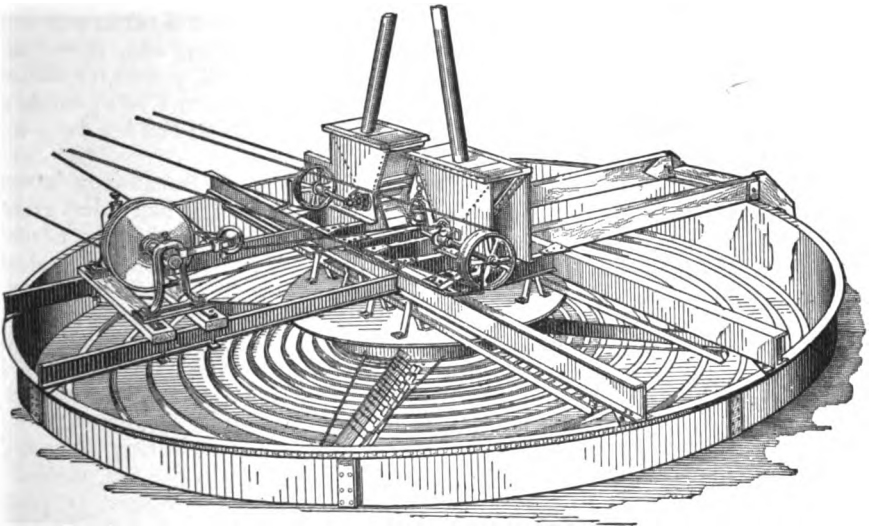

FIG. 476*a*.—PERSPECTIVE OF PAPE-HENNEBERG SEPARATOR.

out through a central orifice, l_1, under the revolving disc, by a suction fan, and discharged to a dust chamber. The air takes out the fine dust. The other particles which are able to resist the air current, fall into the concentric troughs. Those with the most momentum go to the farthest trough; the others are graded

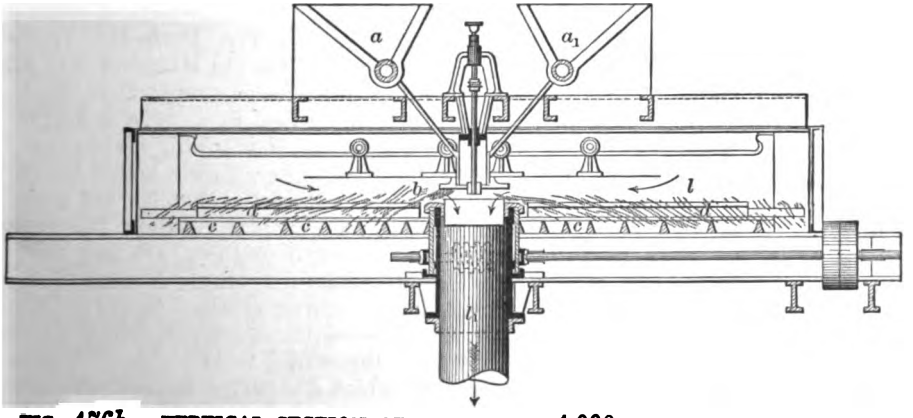

FIG. 476*b*.—VERTICAL SECTION OF SEPARATOR, 4,000 MM. INSIDE DIAMETER.

in the different troughs according to their momentum. These are sorted products analogous to those of a hydraulic classifier, the outer trough containing the coarsest product corresponding to the first spigot, and the exhaust containing the fine dust corresponding to the slime overflow. Each of the troughs has a cross slit at one place in the bottom. Revolving arms, *d*, with scrapers for each

trough serve to bring the ore to the slits. The outer trough yields pure concentrates; the products from the others are sifted, and yield fines, which are concentrates; coarse, which are waste; and middlings, which are re-treated dry or, better treated wet on tables. The fine dust is also best treated wet on tables. The various adjustments are: the speed of the disc, the velocity of the air current and the rate of feed. The disadvantages are that ore must be crushed fine, 1 mm. to 0.85 mm., which causes much dust. This fine stuff if taken out is not satisfactorily treated on any existing machine; if not taken out, it contaminates all the other products. The power required is 3 horse power for the machine and 2 horse power for the fan. The capacity is 1,800 to 2,700 pounds per hour. Plants have been erected in Sweden, in the Urals, and one has been built for China.

§ 606. THE CLARKSON-STANFIELD PATENT CENTRIFUGAL SEPARATOR is much like the last. It has four troughs for catching the products. It has radial grooves in the revolving disc and this disc is covered by another disc, so that the particles are forced to travel outward through the grooves. Its feed is sized very closely beforehand, using in one instance 30-, 35-, 42-, 50-, 70-, 90- and 120-mesh sieves. The fine dust is not sent to the machine; the other products are treated one at a time, with the proper speed, and yield: heads in the outer troughs, middlings in the next troughs and tailings in the inner troughs. It has been installed at the Carn Dochan mine in North Wales, where over 80% extraction is obtained by the process, also at the Prussian mine in Boulder County, Colorado. One man can tend three or four, or even five, machines, each treating 1½ tons per hour. Australian tailings, assaying 7 to 8 pennyweights gold per ton, yielded on a test at one operation: First-class concentrates, assaying 7 ounces, 16 pennyweights, 9 grains gold per ton; second-class concentrates, assaying 2 ounces, 12 pennyweights, 6 grains gold; and tailings, assaying 1 pennyweight, 7 grains gold.

A CENTRIFUGAL MACHINE SEPARATING COAL is used at the Queen Mary Colliery, Lannisdorf. It includes the revolving disc, the annular trough and the air suction.[194]

III. AIR JIGS.

§ 607. THE HOOPER PNEUMATIC CONCENTRATOR.—The Perfected Hooper Pneumatic Concentrator, which is the modern form of the old PADDOCK AIR JIG, substitutes air for water as a pulsating medium for effecting separation.

Following are the essential features of the machine (see Figs. 477*a* and 477*b*). Through the chamber *A* runs a rectangular diaphragm *a*. This diaphragm is composed of an outer rim of leather, the sides of which are firmly bolted between the upper and lower sections of the air chamber. Within the chamber the leather is firmly attached to a strong wooden frame, *b*, which is divided by transverse wooden braces *c*. Between these braces, and attached to them, are two rubber flaps resting upon a sheet of perforated metal. The diaphragm is connected to two eccentric boxes, *B*, in which revolve a fixed eccentric attached to the working shaft *C*, each eccentric being cased by a loose eccentric sleeve, *d*, which can be adjusted and held by a set screw, *e*, allowing a throw of ¼ to 1¼ inches. A movement is thus communicated to the diaphragm which discharges at each revolution an air blast to the chamber *A*, which blast then passes through the fixed diaphragm *G*, also arranged with rubber flaps, and is discharged through the grated sieve, *g*, upon a broadcloth bed, *f*, stretched over same. Resting upon the broadcloth bed is the concentrating top which consists of two sets of guide strips, running diagonally to each other and at angles of 30° to 45° with the side of the frame. The lower set of strips, *H*, are of brass, ⅛ inch thick, ¼ to ½ inch high and ⅝ to 1¼ inches apart, depending upon the material to be treated. The

upper set of strips, *I*, called skimmers, run upon and diagonally across the lower set. They are also of brass, $\frac{1}{16}$ inch thick, $3\frac{1}{2}$ inches high and $\frac{5}{8}$ to $\frac{3}{4}$ inch apart.

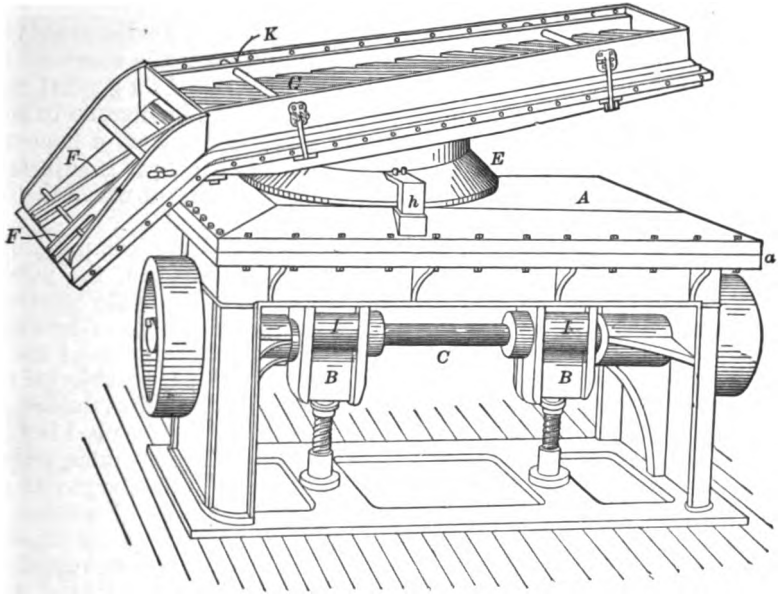

FIG. 477*a*.—PERSPECTIVE OF THE HOOPER PNEUMATIC CONCENTRATOR

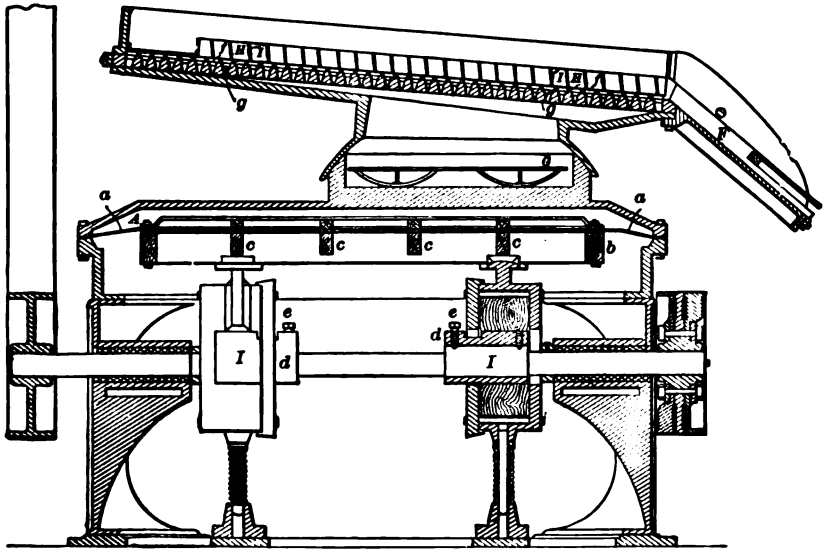

FIG. 477*b*.—LONGITUDINAL SECTION. SCALE—$\frac{3}{4}$ INCH = 1 FOOT.

These upper strips terminate 2 inches from the left or discharge side of the top for a distance of 23 inches from the discharge end, thus leaving a free discharge

channel, *K*, for the gangue or tailings. The concentrating top may be removed from the concentrating bed at will. Any desired vertical or lateral inclination of the concentrating bed is obtained by means of a universal joint, *E*, which is held in the desired position by means of two clamps situated at opposite sides of same, as shown at *h*. The maximum inclination toward the discharge side is 11° and that toward the concentrating side 5°, depending upon the character of the ore being treated and the mesh to which it has been sized. As a general rule the larger the mesh and the heavier the mineral, the greater the inclination in both directions. The crushed ore, after being closely sized, is fed from a hopper (not shown) placed at the head of the concentrating bed. This hopper is adjustable in position and it is provided with small sliding gates, by means of which the flow is adjusted.

It will be evident from the foregoing that when crushed ore, composed of particles of different gravities, is fed upon the concentrating bed, the pulsations through the broadcloth, due to the blasts before described, cause the heavier mineral particles to be thrown to the bottom, where they settle down between the lower metal strips and are thus guided toward the concentrates side of the table, the lighter or gangue material being thrown to the top where it is subjected to successive skimming actions by the upper set of metal strips and thus guided in the opposite direction toward the tailings side of the table. After the bed is filled to an even depth of ½ to ¾ inch and the resulting products of concentrates, middlings and tailings begin to flow regularly and smoothly over the discharge end of the table, they are guided to any point of disposition by means of wooden guide strips, *F*. It is found that the various minerals contained in an ore classify according to their specific gravities, the heavier mineral, being interrupted in its flow by the side of the concentrating top, is spread out in a well defined strip by the action of the upper skimmer, the next heaviest taking its place beside it, etc. There is therefore a distinct separation of all the minerals should there be sufficient variance in their specific gravity.

To obtain the best results the ores treated should be below 2 mm. and should be closely sized, say through a 20-mesh screen on a 30-mesh, through 30 on 40, 40 on 60, 60 on 80, 80 on 120 and 120 on 250. Of course, when there is considerable variance between the mineral and gangue, close sizing is not so important. The speed of the machine varies from 350 revolutions per minute in the case of coarse material to 450 for fine. This variation in speed is obtained by means of cone pulleys. The stroke or force of air is varied by the length of eccentric throw by adjusting the eccentric sleeves before described. The greater the throw of these eccentrics the stronger the air blasts. The heavier the material treated the heavier the air blast required. All machines are now supplied with an adjusting device by means of which the throw of the eccentrics may be altered at will without stopping the machine. The capacity of the machine varies from 9 to 16 tons per day of 24 hours, according to the character of ore treated, and the horse power required varies from 1¼ to 2.

When the ore is closely sized, it is claimed to separate minerals which differ only one point in specific gravity and even less. A test of a fluorspar ore carrying lead and 67% zinc yielded in three successive tests 94%, 97% and 91% extractions respectively.

The old Paddock jigs were run for five years at the Frisco mill, Utah, on ore containing limestone, quartz, dolomite, heavy spar, galena, silver, etc., from the Carbonate mine, treating thirty tons per day, concentrating four into one. The ore was closely sized and the coarser middlings re-treated. An average day's work on June 20, 1881, is given in Table 365 to show what the machines accomplished.

TABLE 365.—ASSAY OF PADDOCK JIG PRODUCTS.

Size of Feed.	Feed.		Heads.		Middlings.		Tailings.	
	Lead. Percent	Silver. Oz. per Ton	Lead. Percent	Silver. Oz. per Ton	Lead. Percent	Silver. Oz. per Ton	Lead. Percent	Silver. Oz. per Ton
10 to 20 mesh.....	14.8	32.66	22.0	60.60	.....	.....	Trace.	Trace.
20 to 35 "	7.3	21.28	41.9	108.39	4.5	8.60	"	"
35 to 50 "	8.0	25.08	33.3	83.41	4.7	15.30	"	0.58
50 to 80 "	11.4	38.34	55.5	136.20	.....	.....	"	2.18
80 to 110 "	9.9	28.72	48.4	146.30	.....	.....	.....	Trace.
110 to 140 "	15.8	42.14	49.7	160.70	.....	.....	.....	"
Re-treating Middlings.								
20 to 35 mesh.....	4.5	8.60	27.0	72.03	.....	.....	Trace.	Trace.
35 to 50 "	4.7	15.30	41.0	100.03	.....	.....	"	0.67

John Heard, Jr., found on antimony ore through 24 on 60 mesh that the following adjustment did the best work: strokes per minute, 540; length of stroke,

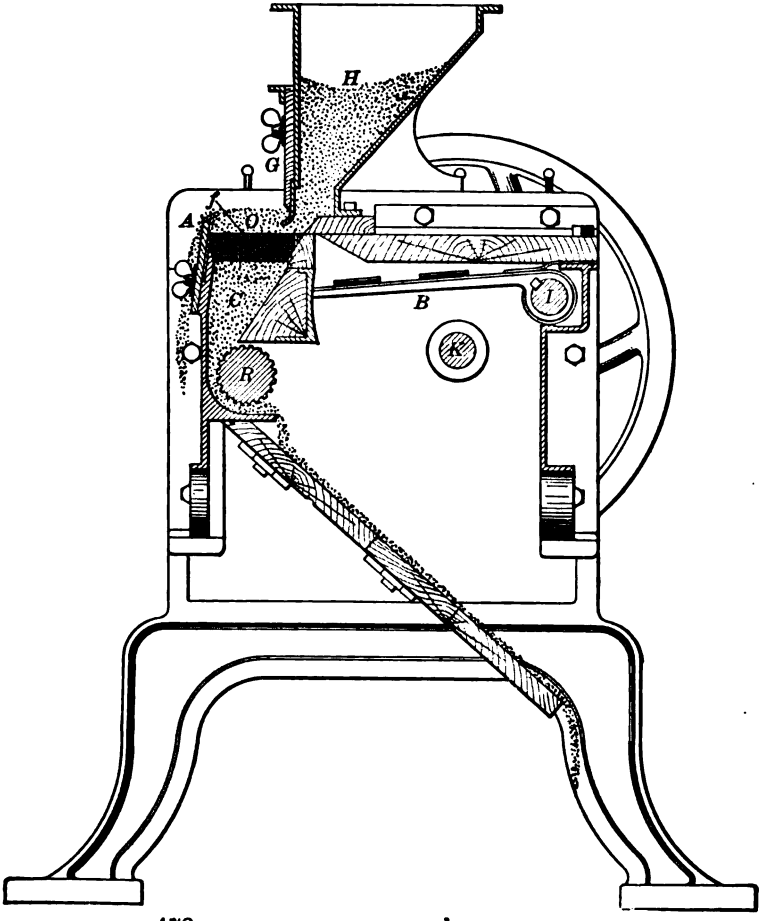

FIG. 478*a*.—SECTION OF KROM'S PNEUMATIC JIG.

½ inch; length of jig bed, 30 inches; amount fed per hour, 1,460 pounds; slope from feed end to discharge end, 7°; slopes from tailings side to concentrates side,

2°; by strict attention to adjustments, he was able to obtain a better concentration than had been made in the wet way on the same ore.

The machine requires not only that a constant rate of feed be maintained but that the per cent. of concentrates should be constant. Otherwise it will send concentrates into the tailings or tailings into the concentrates both of which can be averted only by constant watching and adjustment. One man can tend six machines.

The modern form of this jig is used successfully to-day for graphite and garnet and is advocated for other separations.

§ 608. KROM'S PNEUMATIC JIG.—(See Figs. 478*a*, 478*b* and 478*c*.)—This machine consists of a swinging door blower, *B*, with check valves to prevent the downward passage of air, conveying rapid pulsations of air into the tubes *f*, ½ inch wide, of sieve cloth, through the sides and tops of which it is discharged, passing up through the bed *O*, and effecting the separation between the heavy mineral and the gangue. These gauze tubes, *f*, are open at the end to the blower to receive the wind, and on the under side to prevent them from choking with fine ore. They are placed at $\frac{3}{16}$, ¼, ⅜, or ½ inch apart, according to the grade of ore treated.—the finer the nearer. The ore is fed in through a hopper, *H*, passing under the adjustable gate, *G*, forming a jigging bed, *O*, and discharging tailings over the adjustable tail toward *A*. The concentrates, which completely fill the hutch, *C*, settle slowly and are discharged by the regulated roller, *R*. The swinging-door

FIG. 478*b*.—SECTION OF ORE BED AND SIEVE.

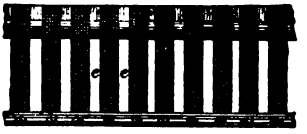

FIG. 478*c*.—PLAN OF SIEVE.

blower is actuated by a cam on the shaft, *K*, with six projections which give the downward motion through an arm on the shaft, *I*, a spring which gives it the quick upward pulsion, and an adjustable strap which limits the amount of pulsion. Upon the cam is an adjustable crank pin which serves as a pivot for a pawl acting upon a ratchet wheel to drive the discharge roller, *R*. The roller, therefore, acts in concert with the blower. The distance the ore travels from the gate, *G*, to the tail, *A*, is only five inches; the width of the bed is 4 feet. The machine is run with 420 to 500 pulsions per minute. It treats ½ ton per hour, using ⅛ horse power.

It appears to be necessary, according to theory, to size the feed more closely than for a hydraulic jig. The inventor claims, however, that tests show that this is not true. The coarsest size claimed as capable of being treated by this machine is 6 mesh, and the finest size is 140 mesh. The machines are run in practice with two successive treatments, the roughers and the finishers; the roughers make for clean tailings and the finishers for clean headings.

At Star Cañon, Nevada, 66,800 pounds of ore from the DeSoto mine, assaying $72.24 per ton in silver, making a total value of $2,412.81, yielded results shown in Table 366.

TABLE 366.—PRODUCTS FROM KROM JIG ON DESOTO ORE.

	Amount. Pounds.	Value per Ton.	Total Value.
No. 1 mineral	1,013	$722.71	$366.04
No. 2 mineral	1,092	1,187.57	648.40
No. 3 mineral	515	1,204.54	(a) 305.35
Dust	11,998	138.17	828.88
Total with dust	14,618	298.98	2,146.67
Total without dust	2,620	1,007.47	1 319.79

(a) There is a slight inconsistency in the values on this line, but no data is available to correct it, and it does not affect the result appreciably.

Where the dust was put with the concentrates the extraction was 89.05%. If, however, it is not, the extraction is only 54.70%. It is clear that the dust could not be put with the concentrates except when it was rich.

In the same mill, 3,260 pounds of silver ore from the Seminole mine, assaying $4.84 per ton, making a total value of $7.88, yielded products as shown in Table 367.

TABLE 367.—KROM JIG RESULTS ON SEMINOLE ORE.

	Amount of Product.	Assay per Ton.	Total Value.
	Pounds.		
No. 1 mineral	55	$32.32	$0.88
No. 2 mineral	49	86.87	2.12
No. 3 mineral	48	135.10	3.24
Total without dust	152	82.11	6.24

The extraction was 79%. In this case the dust was probably of little value, and where that is true the objection stated below does not hold.

According to John Heard, Jr., the capacity of a single jig is about 300 pounds per hour, not including dust, which amounted to 17%.

The disadvantages under which this machine appears to labor are that it has no power of self-regulation, and it provides no means of treating dust. The lack of self-regulation causes the machine, if fed more rapidly than normal, to lose concentrates in the tailings and if fed less rapidly, to contaminate the concentrates with the tailings. And again, if the feed be regular in quantity, but the percentage of concentrates variable, then the rise in percentage will enrich the tailings and the fall will contaminate the heads. It misses the approximate self-regulation which is true of hydraulic jigs, which tides them over the times between the visits of the attendant. The machine's strongest claim is that it is suited to a dry climate where water cannot be obtained.

§ 609. DRY BLANKET.—A primitive method of winnowing and concentrating ore dry upon a blanket, exists in some parts of Mexico. Two men roll and toss the finely broken ore in a blanket, exposing it to the action of the wind. The finest portion is blown away; the rich portions of horn silver and metallic gold become entangled in the hair of the blanket, while the poorer part is turned off.

DRY PANNING.—A method of dry panning combined with hand picking, winnowing and blowing with the mouth, is used in the placer gold fields of Western Australia.[156]

§ 610. ADVANTAGES OF AIR AS COMPARED WITH WATER.—The chief claim for favor is in the ready accessibility of a medium of separation, without the cost of pumping, especially in dry climates. It also gives no trouble from freezing in cold weather, has no harmful chemical action on the products, and its products are dry and ready to ship. Where the rich mineral is of very high value and also soft and brittle, as in tellurides, gray copper and other ores, it is easy to draw off and settle dust, rich enough to ship, by the dust chamber. This may give a greater saving than the wet method, which has greater losses in tailings and greater difficulty in settling fine slimes. The greasy flotation, which causes some loss and much trouble with the water treatment, does not occur with air. The cohesion between mineral particles and the medium is less in the case of air than in water. The enveloping film (see § 359), is probably thinner and more easily brushed away. This is an advantage only in settling finer particles. The lightness of the air admits of a higher number of pulsions per minute than with water, and this has to be taken advantage of in order to bring up the capacity to that of a hydraulic jig, working upon similar material.

§ 611. DISADVANTAGES OF AIR AS COMPARED WITH WATER.—Air and water may be said to be between the extremes, namely, a vacuum where density equals 0,

in which quartz and galena settle at the same rate, at one end of the series, and a heavy solution of the same specific gravity as quartz, in which the quartz will fail to settle at all, at the other end. The proportional rates of settling are expressed by Table 368. They are calculated according to Rittinger's formula for rates of settling in mediums of different densities, which is the best formula known to-day for larger sizes of grain, and gives results sufficiently accurate for this purpose.

TABLE 368.—RATES OF SETTLING IN DIFFERENT MEDIUMS.

Density of Medium.	Proportional Velocities of Settling of Particles of Equal Diameter.	
	Quartz.	Galena.
0 (vacuum)	1	1
0.00125 (air)	1	2.88
1 (water)	1	4.06
2.67 (heavy solution)	0	Infinity.

It will be further noticed that the figures in the galena column of Table 368 are also the free settling ratios (see § 356) between the diameters of galena and quartz particles which are equal settling in the different mediums. The separation in the heavy solution is obviously very easy, while in vacuum no separation takes place. The settling ratio of quartz and galena in water, which is nearer to the heavy solution, is much more favorable than in air, which is further removed.

Owing to the higher friction of particles settling in water and also the higher specific gravity of water, which gives greater buoyancy, the velocity of current need not be so great as with air. In other words the effect of density in water is equivalent to the effect of velocity in air.

In water concentration graded crushing is advantageous, since the coarser sizes and the dust are easily treated; the reverse is true in the use of air, which cannot be used with coarse sizes, and the fine crushing makes much dust which cannot be as well treated as by water.

With water, the film surface treatment is a natural method of separation. With air, it is a difficult method and hard to control; in fact, only one machine using this idea is known to the author.

Water disintegrates clayey matter and dissolves soluble salts, freeing the particles cemented by them. In both cases the particles are left free for individual treatment. Air effects neither of these results.

Air requires that the whole batch should be made perfectly dry at the start, which may be a costly operation. Water concentration at most requires only that the concentrates should be dried preparatory to shipping them.

Fine, dry particles adhere to coarser grains more or less and may contaminate the waste product with rich mineral or lower the value of the concentrates with poor mineral. This adhesion may or may not be caused by electricity. Reasoning from what takes place in some of the manufactories, analogy would seem to point to it as the cause. In the case of coal there are several records of cases where the dry method, by blowing air, gave less adhering dust than the water concentration.

Since air jigs are all pulsion jigs, not using suction at all, and since the diameter ratio for quartz and galena, for example, when settling freely in air, is less than in water, it follows that the feed to air jigs should be more closely sized than for hydraulic jigs, and this sizing will of necessity reach much finer sizes. It seems to the author that the work of the air jig is crippled, when compared with the hydraulic jig, by the lack of its ability to use suction. A probable reason for the absence of suction is the greater clearance loss between pulsion and suc-

tion in air, which is due to the elasticity of the air, and which does not exist in water.

Since air diffuses, while water seeks its own level, the air is robbed of one of the principles which helps the hydraulic jig to be self-regulating. Since a hydraulic jig can have upon its sieve a bed of mineral which permits grains that rightly belong in the hutch to go there, and causes grains that belong in the tailings to be held up and sent there, while the air jig cannot have a bed acting in that way, the air jig loses a second important means of being made self-regulating.

Separation by Centrifugal Force.

§ 612. Centrifugal force attracts the attention of the ore dresser along several different lines.

The formulæ for centrifugal force* are

$$F = \frac{W V^2}{g R} = 0.000341 \times W R N^2$$

$$V = \frac{2 \pi R N}{60}$$

where F = centrifugal force in pounds, W = weight in pounds, V = peripheral velocity in feet per second, $g = 32.2$, R = radius in feet, and N = revolutions per minute.

The formulæ given by Rittinger[218] depend upon a function which he himself showed was less reliable for small particles than for large. The author, under free settling, has shown that the computed velocity varies greatly from the observed velocity. Centrifugal force appears to be adapted only for use with very fine sizes, where the computation errors would be very large. On these accounts the author has not reproduced the formulæ developed by Rittinger.

If water in a cylinder be rotated rapidly around the axis of the cylinder, falling particles of mineral matter will be thrown toward the walls by centrifugal force. Of two particles of the same size but of different specific gravity the heavier will move more rapidly toward the wall; of two particles of the same specific gravity but of different diameters the larger will move more rapidly toward the wall. The following idea which may offer suggestion in some design is added here: under ordinary conditions a cubic centimeter of water weighs 1 gram, a cubic centimeter of quartz 2.65 grams, and of copper 8.2 grams. The cubic centimeter of copper therefore weighs 5.55 grams more than that of quartz. If these substances were all put in a centrifugal machine and revolved with sufficient force to make the cubic centimeter of water have a virtual weight of 100 grams, then the quartz would weigh 265 grams and the copper 820 grams, or the copper would now weigh 555 grams more than the quartz. The author thinks that as the ratios are all maintained the conditions of separation remain not greatly changed from free settling conditions.

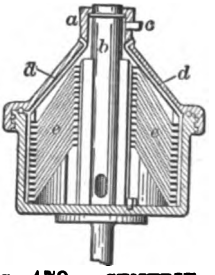

FIG. 479.—CENTRIFUGAL SEPARATOR.

The application which seems most attractive for ore separation is that of the cream separator, and a good example is the "Alpha" DeLaval Cream Separator (Fig. 479). A little bottle-shaped cylinder about 9 inches in diameter revolves upon a vertical axis at high speed (6,000 revolutions per minute more or less). The neck a of the bottle is perhaps one-quarter the diameter of the bottle. The milk is fed by a central tube,

*See Kent's "Mechanical Engineers' Pocketbook," p. 423.

b, in a vertical stream which impinges on the bottom of the bottle and is instantly thrown to the circumference, assuming the shape of a hollow cylinder with an almost vertical inner wall. As more milk is fed the hollow central space narrows until it is coincident with the inside of the neck of the bottle; further feeding of milk causes an overflow all around at the mouth. The centrifugal force separates the heavy part (milk) from the light part (cream); the latter rises or seeks the center, the former settles or seeks the circumference. It follows that the cream overflows at the nozzle, *c*, while the milk flows out through the little tubes, *dd*. The perforated, conical diaphragms, *ee*, serve to keep the particles in their respective radial positions, preventing the remixing of the already separated fluids.

So perfectly does this principle work for liquids that it has become the standard method of separation of cream from milk for creameries and dairies. There are, however, two features which must be reckoned with in the design of machines for ore separation: (1) It can at most act only as a method of settling particles from water, and is probably identical in behavior with free settling conditions, differing only from that method in the extreme rapidity of its action; (2) the heavier particles thrown to the circumference immediately form a hard cake, which cannot flow and discharge like the milk but must be removed in some way. These features are the chief reasons for the difficulty which has been experienced in adapting centrifugal force to the concentration of ores.

THE PECK CENTRIFUGAL CONCENTRATOR[228] is a slightly conical drum revolving on a horizontal axis. It is 8 feet long, 33 inches in diameter at the small end and 40 inches at the large end. Within this is a drum of a little smaller diameter than the outer one. The outside drum is run at a speed of 600 to 800 revolutions a minute, and fine pulp fed at the small end is thrown against the walls by centrifugal force. This force causes the heavy minerals, for example pyrite, to cling to the cylinder, while the flow of water carries out the lighter minerals, for example quartz, at the discharge end of the drum. As the layer of concentrates increases, the wooden drum is automatically withdrawn, keeping a distance of about ¾ inch between it and the newly formed bed of concentrates. The machine becomes charged with concentrates after running from 5 to 18 minutes, depending on the ore. The feed is then stopped, the speed of the machine is reduced to 200 revolutions a minute, and clear water is introduced to wash out the concentrates, which takes 2 to 3 minutes. The machine requires much power, and must be fed with pulp of an exact consistency. It is intended for very fine pulp, on which it is said to do successful work, but it is not adapted to ore coarser than about 80-mesh.

THE PAPE-HENNEBERG AND CLARKSON-STANFIELD MACHINES (see § 605 and § 606) use centrifugal force upon dry sand to throw the particles in a horizontal direction, to make a separation based on the different trajectories of grains of higher and of lower specific gravity. Centrifugal force, as such, plays no special part beyond that indicated above.

Woodworking shops use exhaust fans to draw away dust from their machines and from sweepings, and a conical spiral centrifugal separator to separate the chips and dust from the air, which is discharged comparatively free from dust. It is possible that this fan and centrifugal dust settler may be worked into some of the problems of ore dressing; also that in the same connection the use of static electricity of high potential to clot the dust particles together after the manner of snowflakes may be available.

ROASTING FOR POROSITY.

§ 613. Certain minerals, such as pyrite, become porous by roasting. Their virtual specific gravity (that is, the specific gravity of the porous mass) is thereby

decreased sufficiently for separations previously impossible. The two most common examples are the separation of arsenopyrite and pyrite from cassiterite, and the separation of pyrite from blende. In the Cornish tin concentration works, the concentrates, consisting of cassiterite, arsenopyrite, pyrite and wolframite, are roasted in revolving furnaces to change the dense sulphides into the light and porous oxides, which are then washed away.[217 and 219] Formerly, the remaining heavy product (cassiterite and wolframite) was then roasted with sodium carbonate or sulphate (on an iron hearth) to decompose the wolframite; the sintered mass was leached with water to remove the soluble sodium tungstate, once more the residue washed for the removal of the porous oxides of iron and manganese that result from the decomposition of the wolframite, thus completing the mechanical purification of the cassiterite. This last process, however, has been given up on account of the cost. Moreover, of late years, wolframite has become less abundant in tin ores, and when it does occur, it is hand picked as far as possible.

At Ammeberg, Sweden, in the works of the Vieille Montagne Company,[222] (see § 674), coarse ore, containing pyrite and blende, is roasted in kilns at a temperature that burns the pyrite to the light, porous oxide of iron, but leaves the blende unchanged. This iron oxide is easily washed away from the more dense and heavy blende; whereas the separation of pyrite and blende is very difficult. At the works of the Wisconsin Lead and Zinc Company, Blake [221] designed, for this purpose, a rotating step-hearth reverberatory furnace in which the control of heat and the avoidance of sintering is more perfect than in the kiln.

Heating for Decrepitation.

§ 614. Certain crystallized minerals, such as calcite, barite and fluorite, decrepitate (fly to pieces) to a remarkable extent when heated, while other minerals (especially the amorphous varieties) do not have this property. Consequently, careful heating in connection with screening may serve to make a separation of minerals whose specific gravities are so near each other as to render separation in the ordinary way difficult or impossible. Even crystalline barite and blende have been separated, the barite decrepitating at a lower temperature than blende. For the application of this principle, Heusschen[226] has designed a furnace in which an inclined metallic hearth, suspended from above, is heated beneath by the hot gases from a grate fire. Ore is regularly fed upon the upper end of the hearth, and is moved forward by means of a shaking motion imparted to the hearth by a cam. When a mixture of barite and blende from wet concentration, sized through a 3-mm. and on a 1-mm. screen, was heated in this furnace the barite decrepitated but not the blende. The two minerals were then separated by screening, the blende remaining on the screen and the barite going through. In 24 hours one furnace treated 1,526 kilos, assaying 34% zinc; and the concentrates weighed 1,105 kilos, assaying 48% zinc, while the rejected barite carried only 2% zinc. The percentage of barite in the concentrates is not stated. With a mixture of blende and siderite heated to 500°C. the siderite ($FeCO_3$) was changed to oxide of iron without decrepitating, while the blende decrepitated; and a separation was then made by screening, the percentage of zinc being raised from 39% to 50%. A mixture of blende and pyrite gave similar results.

In other tests,[227] in which 100-pound lots of ore, sized through 5 on 3 mm., were heated in covered cast iron pans, with occasional stirring, a good separation was made between barite and gray copper. The original ore contained 75 to 80% barite and 4 to 5.5% copper, while the concentrates, which weighed from 20 to 22% as much as the original ore, contained from 20 to 20.5% copper.

Disintegrating Followed by Screening.

§ 615. Ores may contain minerals of such different friability that a fair separation can be made by careful crushing in connection with screening. At Lintorf, Prussia, a mixture of blende and pyrite between 10 mm. and 6 mm. in size was fed to a Vapart disintegrator (§ 244) run at 300 revolutions a minute. This reduced the blende much more than the pyrite, so that about 80% of the former was separated by screening. The oversize of the screen was sent a second time to a disintegrator run at 325 revolutions a minute, after which practically all the remaining blende was screened out. The feed to the disintegrator carried less than 35% zinc, and the concentrates contained 50 to 55% zinc, while the pyrite tailings contained zinc only in included grains.[223] When ore through 25 on 20 mm. was fed to a disintegrator run at 400 revolutions a minute, the blende was reduced to 3 mm. and finer while the pyrite was but little broken.

At Chuquicamata, about 140 miles from Antofagasta, Chili, is a large deposit of porphyry in various stages of decomposition, which contains atacamite and a little copper sulphate. The ore breaks up a good deal in handling, and the method of treatment consists simply of screening it in two trommels, the first being about 12 or 15 mesh and the second about 6 mesh. Stuff below 6 mesh is concentrates; the remainder is rejected. The ore averages about 3 or 4% copper, the concentrates about 12 to 16% copper, and the middle size (through 12 or 15 mesh on 6 mesh) probably about 8 to 12% copper. The concentrates amount to only 8 or 10% of the ore by weight, and therefore they do not contain more than 33 to 40% of the total copper.

Disintegrating Followed by Settling or Elutriation.

This method, which is applied to graphite, corundum and clay, is discussed in § 784, § 785 and § 786.

Weathering.

§ 616. Some rocks disintegrate quite rapidly on exposure to the weather, notably those of a clayey or marly character, and certain altered volcanic rocks. Frequent frosts and either the absorption or evaporation of water are especially active causes of this weathering. Two instances may be noted in which advantage is taken of this fact for the purpose of concentration. The "blue ground" in which are found the diamonds of Kimberley, South Africa, is an altered peridotite. After mining, it is spread out about 10 inches deep on immense "floors," which are simply open ground cleared of grass, brush and loose stones.[225] The first treatment consists in running harrows back and forth between two traction engines placed several hundred yards apart. Most of the lumps, which at first are compact, gradually disintegrate and fall to pieces. After a certain period the most refractory lumps are collected and taken to the dressing works to be crushed, sized, jigged, etc. What remains on the floors is then harrowed again, and, if there has not been enough rain, the rock is wetted by hose, there being a complete system of pipes for this purpose. After another period of weathering the rock is shipped to the dressing works. The time required to weather the rock varies from three months to a year or more, depending on the season and on the mine from which it comes. Attempts have been made to treat the "blue" by direct crushing without weathering, but it was found that some of the diamonds were broken in passing through the rolls and the losses in the tailings were high.[229]

Near Meronitz, Bohemia, there is a bed of garnet-bearing argillaceous conglomerate which disintegrates so much by three months' exposure to the weather that it can be washed to obtain the garnets without having to be crushed. The chief cause of decomposition in this case is the rapid oxidation of pyrite in the form of small fossils abundantly distributed through the rock.[220]

ADHESION.

§ 617. At the De Beers Diamond Dressing Works, in South Africa, Kirsten and Labram[225] have devised a special method to extract the diamonds from the final jig concentrates (of which the diamonds constitute about 2%). The machine used is a light side-shaking table, covered with a particular kind of grease, to which the diamonds adhere while all the other minerals are washed into the discharge. When the grease is removed and melted the diamonds sink to the bottom of the vessel. In the first test of the table, made with the finest sand size (through $\frac{1}{8}$- on $\frac{1}{16}$-inch round holes), out of 6,601 carats of diamonds contained in the lot treated, only 111 carats (or 1.68%) went into the tailings. In the second test, with material from $\frac{3}{8}$ to $\frac{3}{16}$ inch in size, out of 19,031 carats of contained diamonds only 40.25 carats (or 0.21%) went into the tailings. This method is intended to displace hand picking.

Adhesion also serves to catch and retain gold upon amalgamated plates. This subject is treated in Chapter XVII.

THE ELMORE PROCESS.*—If the pulp which has passed through a 30-mesh screen be agitated with a layer of oil so as not greatly to disturb the latter, the oil, having an adhesive affinity for many bright metallic particles, sulphides and certain other materials, wets them and holds them up in the oil layer while the quartz and other rock grains are not wetted by the oil and remain in the water layer beneath. The oil should not be shaken to an emulsion with the water.

The materials adapted to being saved by oil include metallic gold, silver and copper, copper and iron pyrites, bornite and gray copper, brittle and ruby silver, tellurides, cinnabar, stibnite, galena, molybdenite, graphite and sulphur. Specific gravity does not directly affect the separation as copper pyrites may be separated from magnetite and heavy spar and probably also from zinc blende by oil, as also bornite from garnet. These separations are practically impossible by water.

The oil preferred is residuum (0.89 specific gravity) after distilling the lighter burning and lubricating oils from crude petroleum. The temperature preferred for the treatment is 54° to 57°F. If the oil is too thin, it can be thickened by mineral butter and if too thick, it can be thinned by lighter oil. The viscosity is all important; the thinner the oil the less is its power to catch and hold the concentrates. Theoretically, the oil can float only 10% of its weight of chalcopyrite, but practically it is found to lift 20 to 28% owing to air bubbles or other cause. The quantity of oil used on an ore containing 7% sulphides is about equal to the weight of the ore; an increase of concentrates, however, requires an increase of oil to float it. The recovery is so complete, however, that only $1\frac{1}{4}$ to $2\frac{1}{4}$ gallons of oil per ton of ore treated are finally lost. This will be increased if the percent. of concentrates is high. The lowest quotation of cost of the oil is 2 to 5 cents per gallon, the highest 17 cents per gallon.

The details of the process are as follows: The pulp, after being crushed to 30 mesh, is fed to a mixer, with about 5 tons of water per ton of dry sand, and oil is fed a little way in from the receiving end at a point found by practice. The mixer is a revolving horizontal drum with a helical rib running from end to end

Inst. Min. and Met., Vol. VIII., (1900), p. 379. C. M. Rolker. *Min. Ind.*, Vol. IX., (1901), p. 777. W. McDermott.

acting as a conveyor. Between the coils are placed low lengthwise blades which lift the pulp to the surface and bring it in contact with the oil layer giving good exposure of the values to the adhesive power of the oil. The delivery end of the mixer has an annular disc with perforations to prevent the discharge from being too rapid. The oil with its catch is separated from the pulp by a settling box. The pulp goes to a second mixer and again, if necessary, to a third. The concentrates, laden with oil from the three mixers, go to the first centrifugal hydro-extractor with an annular disc top and solid sides, revolving 800 times per minute. It is charged with water which stands as a vertical wall when the oil and concentrates are fed into it. The oil floats on the water and overflows the annular disc lip while the concentrates are thrown out through the water forming a band all around. The machine, when charged, is stopped and the concentrates are run into a second smaller centrifugal hydro-extractor with perforated revolving basket; the concentrates remain in this and the water and oil are thrown out through the perforations. The concentrates are ready for market; the oil goes to settling store tanks to be used over; water is drawn off from the bottom of these tanks from time to time. The small amount of oil left in the concentrates does not injure them for smelting purposes.

The cost is that of crushing to 30 mesh with the cost of oil lost and the running of mixers and centrifugal machines.

The advantages are: it has a smaller consumption of water than the wet methods; it yields cleaner heads and tailings than most wet processes; it separates some ores that cannot be otherwise separated. The disadvantages are: it requires careful adjustment of the quality of oil which will vary somewhat with the temperature, of the quantity of oil and water, of the distance into the mixer to feed the oil. Oxidized or tarnished ore or tailings will require to be rebroken to expose fresh, bright surfaces before treatment with oil.

A comparison of jigs and vanners on 52,000 tons with the Elmore process, on 706 tons of ore treated at the Glasdir mine, Wales, (see § 781), showed figures as follows:

	Jigs and Vanners.	Elmore Process.
Average assay value of ore treated, per ton	£1.12.0	£1.18.0
Average percent copper in concentrates	4.771	10.00
Average ounces silver per ton concentrates	3.827	8.25
Average ounces gold per ton concentrates	0.506	0.86
Average assay value of a ton of concentrates	£4.16.7	£12.16.0
Average assay value recovered per ton treated	£0. 4.7	£1.10.9
Average percentage value recovered	14.5	80.9

BIBLIOGRAPHY FOR MAGNETIC CONCENTRATION, AND ROASTING FOR MAGNETISM.

1. Bilharz, O., (1896), "Mech. Aufbereitung," Vol. I., p. 139. Description of the Wenström, Lovett-Finney and Chase separators, and one used at Friedrichssegen.
2. Davies, E. H., (1894), "Mach. Metal. Mines," p. 466. Monarch magnetic separator.
3. Foster, C. Le N., (1894), "Ore & Stone Mining," p. 600. Description of the Chase, Conkling, Edison, Hoffman, Kessler, Lovett-Finney, Ball-Norton, Buchanan, Friedrichssegen, King's, and the Wenström magnetic separators.
4. Kirschner, L., (1899), "Erzaufbereitung," Part II., p. 151. Principles of magnetic separation. Description of a permanent-magnet separator and several forms of electromagnet separators.
5. Kunhardt, W. B., (1893), "Ore Dressing," p. 106. Description of the Siemens and the Friedrichssegen magnetic separators and of the process of roasting for magnetization.
6. Linkenbach, C., (1887), "Aufbereitung der Erze," p. 113. Description of a permanent-magnet separator and an electromagnet separator, both of the drum type.
7. Rittinger, P. R. von, (1873), "Zweiter Nachtrag," p. 76. Description of a separator in which the magnetic particles are lifted by electromagnets from a moving belt and then carried to one side and dropped.

8. Thompson, S. P., (1891), "Lectures on Electromagnet." A book on the theory and design of electromagnets.
9. Wedding, H., (1898), "Eisenhüttenkunde," Vol. II., pp. 297, 447. Principles of magnetic separation and description of several separators. Discussion of the principles and chemical reaction of roasting for magnetization and description of the process.

---

10. *Ala. Geol. Survey. Iron Making*, (1898), p. 247. W. B. Phillips. Results of magnetic concentration of Alabama iron ores both with and without previous roasting.
11. *Am. Inst. Min. Eng.*, Vol. IX., (1881), p. 451. Ellis Clark, Jr. Description of a magnetic separator of the drum class using permanent magnets and used at Przibram.
12. *Ibid.*, Vol. X., (1882), p. 305. W. E. C. Eustis and H. M. Howe. Description of a magnetic process for the extraction of nickel.
13. *Ibid.*, Vol. XVII., (1889), p. 599. R. A. Cook. Description of the Wenström magnetic separator and results obtained with it at the Dannemora mine in Sweden.
14. *Ibid.*, p. 728. J. Birkinbine and T. A. Edison. General article giving descriptions and results obtained with the Buchanan, Wenström, Conkling, Monarch and Edison machines.
15. *Ibid.*, Vol. XIX., (1890), p. 62. J. C. Fowle. Description of and results obtained at a Lake Superior magnetic concentration plant using Buchanan and Wenström separators.
16. *Ibid.*, p. 71. F. H. McDowell. Detailed costs for each of six months at the Tilly Foster mine using the Conkling wet separator.
17. *Ibid.*, p. 187. C. M. Ball. Description of and results obtained with a Ball-Norton magnetic separator.
18. *Ibid.*, p. 289. Clemens Jones. Description of a roasting process for magnetizing hematite ore, with costs and results obtained.
19. *Ibid.*, p. 656. John Birkinbine. Review of the four preceding references and description of the Conkling wet magnetic separator.
20. *Ibid.*, Vol. XX., (1891), pp. 575 to 609. Various authors. Discussion of the question of magnetic concentration including costs, results, and value of products.
21. *Ibid.*, Vol. XXI., (1892), W. P. Blake. Description of an early form of magnetic separator invented by Blake.
22. *Ibid.*, p. 503. H. S. Chase. Description of the Chase magnetic separator.
23. *Ibid.*, p. 519. F. H. McDowell. Figures on the cost of magnetic concentration at the Tilly Foster mine.
24. *Ibid.*, Vol. XXII., (1893), pp. 569, 723. W. P. Blake. Description of process for separating pyrite by roasting followed by magnetic treatment.
25. *Ibid.*, Vol. XXV., (1895), p. 399. W. B. Phillips. Description of process for concentrating iron ores in Alabama by roasting and magnetic separation.
26. *Ibid.*, p. 533. C. M. Ball. Mathematical discussion of the magnetic separation of iron ores with a description of the Ball-Norton magnetic separator.
27. *Ibid.*, p. 551. H. S. Chase. Results obtained by the magnetic treatment of Cranberry magnetic ores.
28. *Ibid.*, Vol. XXVI., (1896), pp. 351, 1089. H. A. J. Wilkins and H. B. C. Nitze. Description of the Wetherill magnetic separators and results obtained in separating minerals not commonly considered magnetic.
29. *Am. Mfr.*, Vol. XLIX., (1891), August 4. Description of the Lovett-Finney magnetic separator.
30. *Ibid.*, Vol. LIV., (1894), p. 232. Magnetic separation in Alabama.
31. *Ibid.*, p. 663. Magnetic concentration.
32. *Ibid.*, p. 879. Losses in magnetic concentration.
33. *Ibid.*, Vol. LVII., (1895), p. 585. Notes on the magnetization of iron ores.
34. *Ibid.*, Vol. LIX., (1896), p. 480. A magnetic separator.
35. *Ibid.*, p. 512. Roasting for magnetic concentration.
36. *Ibid.*, Oct. 30. Abstract of *Am. Inst. Min. Eng.*, Vol. XXVI., p. 351.
37. *Ibid.*, Vol. LXIV., (1899), p. 351. Abstract of *Oest. Zeit.*, Vol. XLVII., (1899), p. 51.
38. *Ann. des Mines*, Series VII., Vol. II., (1872), p. 292. A. Henry. Description of the magnetic separator with reciprocating motion, used at Przibram.
39. *Ibid.*, Series VIII., Vol. XX., (1891), p. 75. M. Bellom. Description of drum separator used at Friedrichssegen.
40. *Berg. u. Hütt. Jahrb.*, Vol. XXXII., (1884), p. 214. F. J. Poech. Description of the Siemens magnetic separator and of the magnetic separator used at Friedrichssegen.

41. *Berg. u. Hütt. Zeit.* Vol. XXXVIII., (1879), p. 197. C. Blömeke. A historical article describing several forms of magnetic separators and their work.
42. *Ibid.*, Vol. XXXIX., (1880), p. 306. No author. Description of the Siemens magnetic separator.
43. *Ibid.*, Vol. XLII., (1883), p. 454. Same as *Eng. & Min. Jour.*, Vol. XXXV., p. 133.
44. *Ibid.*, Vol. XLIII., (1884), p. 412. No author. Description of a magnetic separator used at Friedrichssegen.
45. *Ibid.*, p. 509. O. Heberle. Description of the magnetic separator and the process of roasting and magnetic separation of blende from spathic iron ore at Friedrichssegen.
46. *Ibid.*, Vol. XLIX., (1890), p. 422. Same as *Eng. & Min. Jour.*, Vol. L., p. 269.
47. *Ibid.*, Vol. LIV., (1895), p. 266. No author. Capacity, cost of treatment and comparison of the Monarch and Wenström magnetic separators.
48. *Ibid.*, Vol. LVI., (1897), p. 129. C. Blömeke. Description of the Wetherill magnetic separators and discussion of their applicability.
49. *Bull. Soc. Ind. Min.*, Series III., Vol. VII., (1893), p. 465. G. Gromier. Description of the roasting and magnetic separation of siderite at Allevard and of the magnetic separator.
50. *Cassier's Mag.*, Vol. XIII., (1898), p. 433. W. A. Anthony. Description of the Edison, Buchanan and Wetherill magnetic separators and outline of Wetherill's con-concentrating plant.
51. *Charcoal Iron Workers*, Vol. III., (1882), p. 399. No author. Description of the Buchanan magnetic separator.
52. *Ibid.*, Vol. VIII., (1888), p. 97. No author. Description of and results obtained by the Edison, Wenström and Buchanan magnetic separators.
53. *Coll. Guard.*, Vol. LXXIV., (1897), p. 885. No author. Description of Edison's magnetic concentrating plant.
54. *Ibid.*, p. 1114. B. H. Brough. Short description of the Wenström separator and outline of the magnetic plant at Svärto, Sweden.
55. *Ibid.*, Vol. LXXVII., (1899), p. 314. Abstract of *Iron and Steel Inst.*, Vol. LVI., (1899), p. 18.
56. *Ibid.*, p. 867. Similar to *Eng. & Min. Jour.*, Vol. LXVII., p. 503.
57. *Col. Sci. Soc.*, Vol. VI., (1897), p. 15. G. M. Gouyard. Results obtained in separating pyrite and blende by roasting followed by magnetic concentration.
58. *Comptes Rendus Soc. Ind. Min.*, (1893), p. 53. J. de Satelin. Description of the Hugues Daviot electromagnet.
59. *Dingler's Polyt. Jour.*, Vol. 278, (1890), p. 264. No author. Description of several forms of magnetic separators.
60. *Ibid.*, Vol. 283, (1892), p. 228. No author. Description of the Ball-Norton magnetic separator.
61. *Ibid.*, Vol. 305, (1897), p. 109. No author. Abstracts from *Am. Inst. Min. Eng.*, Vol. XXV., p. 399; *Eng. & Min. Jour.*, Vol. LXII., pp. 75 *et seq.*; *Franklin Inst.*, Vol. CXLIII., p. 279, and *Zeit. Elektrochemie*, Vol. II., p. 641, and Vol. III., pp. 291, 377.
62. *Electrical Rev.*, Vol. XXXI., (1897), p. 203. S. H. Goddard. Description of Edison's magnetic concentrating plant.
63. *Engineering*, Vol. LVIII., (1894), p. 418. No author. Description of the roasting and magnetic plant at Monteponi and of the magnetic separator. Results obtained.
64. *Ibid.*, Vol. LXII., (1896), p. 476. Same as *Iron & Steel Inst.*, Vol. L., Part II., p. 116.
65. *Ibid.*, Vol. LXIV., (1897), p. 579. No author. Description of the Edison magnetic concentrating plant.
66. *Ibid.*, Vol. LXVIII., (1899), pp. 470, 508. Similar to *Iron and Steel Inst.*, Vol. LVI., (1899), p. 18.
67. *Eng. News*, Vol. XXVIII., (1892), p. 199. Abstract of *Am. Inst. Min. Eng.*, Vol. XXI., p. 503.
68. *Eng. & Min. Jour.*, Vol. XIII., (1872), p. 168. R. W. Raymond. Description of Balch's magnetic separator with revolving electromagnets magnetized intermittently.
69. *Ibid.*, Vol. XXXV., (1883), p. 133. No author. Description of an early form of the Buchanan separator.
70. *Ibid.*, Vol. XXXVIII., (1884), p. 216. No author. Results of tests of Buchanan magnetic separator.
71. *Ibid.*, Vol. XLVI., (1888), p. 437. No author. Description and capacity of the Wenström magnetic separator.
72. *Ibid.*, p. 481. No author. Description of the Edison magnetic separator and results obtained therewith.

73. *Ibid.*, Vol. XLVII., (1889), p. 542. No author. Description of a more modern form of the Buchanan magnetic separator.
74. *Ibid.*, Vol. L., (1890), p. 269. No author. Description and some results obtained by the Ball-Norton separators.
75. *Ibid.*, p. 333. No author. Some results obtained by Ball-Norton separators.
76. *Ibid.*, Vol. LII., (1891), p. 588. A. Sahlin. Description of the Lovett-Finney magnetic separator with results obtained with it at Weldon, New Jersey.
77. *Ibid.*, p. 680. No author. Description of the Hoffman magnetic separator with results obtained on Croton ore.
78. *Ibid.*, Vol. LIII., (1892), p. 662. A. Sahlin. Descriptions of the Conkling, Buchanan, Edison, Wenström, Ball-Norton, Hoffman, Lovett-Finney and Chase magnetic separators.
79. *Ibid.*, Vol. LIV., (1892), p. 8. Abstract of *Am. Inst. Min. Eng.*, Vol. XXI., p. 503.
80. *Ibid.*, Vol. LVII., (1894), p. 490. W. B. Phillips. Results and costs of magnetic concentration of Cranberry ore in North Carolina.
81. *Ibid.*, Vol. LVIII, (1894), p. 200. W. B. Phillips. Abstract of *Bull. Soc. Ind. Min*, Series III., Vol. VII., p. 465.
82. *Ibid.*, p. 415. Same as *Engineering*, Vol. LVIII., p. 418.
83. *Ibid.*, Vol. LXI., (1896), p. 564. Similar to *Am. Inst. Min. Eng.*, Vol. XXVI., p. 351.
84. *Ibid.*, Vol. LXII., (1896), pp. 75, 105, 124, 151. W. B. Phillips. Results of treating Alabama hematite ores with the Wetherill magnetic separator without previous roasting.
85. *Ibid.*, Vol. LXIV., (1897), p. 98. J. P. Wetherill. Description of the Wetherill concentrating plant at Franklin, New Jersey.
86. *Ibid.*, Vol. LXVII., (1899), p. 503. No author. Description of the Trustedt magnetic separator which uses an alternating current.
87. *Ibid.*, Vol. LXVIII., (1899), pp. 608, 640. Abstract of *Iron & Steel Inst.*, Vol. LVI., (1899), p. 18.
88. *Franklin Inst.*, Vol. CXLIII., (1897), p. 279. H. B. C. Nitze. An abridgment of *Am. Inst. Min. Eng.*, Vol. XXVI., p. 351.
89. *Genie Civil*, Vol. XVII., (1890), p. 337. G. Prus. Description of the magnetic separation plant at Mercadel, including descriptions of the Kessler and the Vial magnetic separators. Results obtained.
90. *Ibid.*, Vol. XXXIV., (1899), p. 167. F. Schiff. Description of several forms of magnetic separators.
91. *Inst. Civ. Eng.*, Vol. CXVI., Part II., (1894), pp. 65, 76, 94, 100, 112. R. E. Commans. General article describing various machines and their merits.
92. *Iron Age*, Vol. XLII., (1888), p. 582. No author. Description of the Wenström magnetic separator.
93. *Ibid.*, p. 847. No author. Description of the Edison magnetic separator and results obtained therewith.
94. *Ibid.*, Vol. XLVIII., (1891), p. 495. No author. Description of the Lovett-Finney magnetic separator.
95. *Ibid.*, p. 1019. No author. Similar to *Eng. & Min. Jour.*, Vol. LII., p. 680.
96. *Ibid.*, Vol. LII., (1893), p. 202. No author. Description of the Hibernia magnetic concentrating plant for magnetite.
97. *Ibid.*, Vol. LX., October 28, (1897), p. 6. No author. Description of Edison's magnetic concentrating plant.
98. *Ibid.*, Vol. LXII., September 29, (1898), p. 8. No author. Description of the magnetic concentration plant at Svärto, Sweden.
99. *Iron & Steel Inst.*, Vol. XLV., (1894), p. 428. Abstract from *Am. Inst. Min. Eng.*, Vol. XXII., p. 723.
100. *Ibid.*, Vol. L., (1896), p. 116. H. Wedding. Discussion of the reactions in roasting iron ores with or without reference to subsequent magnetic separation.
101. *Ibid.*, Vol. LIV., (1898), p. 377. Abstract from *Oest. Zeit.*, Vol. XLVI., pp. 147, 347.
102. *Ibid.*, Vol. LV., (1899), p. 302. Abstract of *Oest. Zeit.*, Vol. XLVII., (1899), p. 51.
103. *Ibid.*, Vol. LVI., (1899), p. 18. H. C. McNeill. Description of several magnetic separators and outline of plants in Sweden.
104. *Ibid.*, p. 332. Abstract of *Ver. Bef. Gewerbefleisses*, (1899), p. 154.
105. *McClure's Mag.*, November, (1897), p. 75. Description of Edison's magnetic concentrating plant.
106. *Min. Bull.*, Vol. II., (1896), p. 135. Abstract of *Am. Inst. Min. Eng.*, Vol. XXV., pp. 399, 551 and Vol. XXVI., p. 351.
107. *Min. & Sci. Press*, Vol. LIX., (1889), p. 335. No author. Description of the Wenström magnetic separator.

108. *Ibid.*, Vol. LXV., (1892), p. 396. Abstract of *Oest. Zeit.*, Vol. XL., p. 233.
109. *Ibid.*, Vol. LXVI., (1893), p. 290. No author. Classification of magnetic separators.
110. *Ibid.*, Vol. LXVIII., (1894), p. 26. No author. Short note on the result of the work by W. B. Phillips on roasting and magnetic concentration of Alabama iron ore.
111. *Ibid.*, Vol. LXXV., (1897), p. 458. No author. Description of the Edison concentrating plant.
112. *Oest. Zeit.*, Vol. XXI., (1873), p. 360. A. Eschka. Results obtained at Przibram in the roasting and magnetic separation of blende from spathic iron ore.
113. *Ibid.*, Vol. XXV., (1877), p. 47. J. Habermann. Description of a magnetic separator with permanent magnets used at Przibram and results obtained.
114. *Ibid.*, Vol. XXXVIII., (1890), p. 307. Review of *Am. Inst. Min. Eng.*, Vol. XVII., p. 599.
115. *Ibid.*, Vol. XXXIX., (1891), p. 450. Abstract of *Am. Inst. Min. Eng.*, Vol. XIX., p. 187.
116. *Ibid.*, Vol. XL., (1892), p. 233. E. Ferraris. Description of the Ferraris magnetic separator and the plant at Monteponi for separating blende from pyrite by roasting and magnetism.
117. *Ibid.*, Vol. XLI., (1893), pp. 39, 51. J. Billek. Description of plant for roasting and magnetic separation of blende from siderite at Maiern; also of the Siemens and Halske magnetic separator and results obtained.
118. *Ibid.*, Vol. XLV., (1897), p. 40. No author. Note on a magnetic separator invented by Wenström for treating ore without pulverizing it.
119. *Ibid.*, p. 483. C. von Ernst. Description of the new magnetic separator at Monteponi.
120. *Ibid.*, p. 516. Note from *Col. Sci. Soc.*, Gouyard's paper.
121. *Ibid.*, Vol. XLVI., (1898), pp. 147, 168. C. Blömeke. Abstract and discussion of *Am. Inst. Min. Eng.*, Vol. XXVI., p. 351, and *Eng. & Min. Jour.*, Vol. LXIX., p. 98.
122. *Ibid.*, p. 182. Stefan Farbaky. Comparative results of jigs and Wetherill separators.
123. *Ibid.*, p. 347. E. Ferraris. Description of the new magnetic separator used at Monteponi and the results obtained.
124. *Ibid.*, Vol. XLVII., (1899), p. 51. E. Primosigh. Description of the magnetic separating plant at Pitkäranta, Finland.
125. *Rep. Min. Insp. of N. Y.*, for 1893. General article giving description of several magnetic separators and plants.
126. *Rev. Industrielle*, Vol. XXII., (1891), p. 353. No author. Description of the Ball-Norton magnetic separator and results obtained.
127. *Sch. Mines Quart.*, Vol. XV., (1891), p. 125. Same as *Ann. des Mines*, Series VIII., Vol. XX., p. 75.
128. *Stahl u. Eisen*, Vol. XIV., (1894), p. 618. Lurmann. Abstract of *Bull. Soc. Ind. Min.*, Series III., Vol. VII., p. 465.
129. *Ibid.*, Vol. XVI., (1896), p. 771. Same as *Iron & Steel Inst.*, Vol. L., p. 116.
130. *Ibid.*, Vol. XVII., (1897), p. 209. Abstracts from *Eng. & Min. Jour.*, Vol. LXII., pp. 75 *et seq.*, *Iron & Steel Inst.*, Vol. L., p. 116 and *Zeit. Elektrochemie*, Vol. III., p. 377.
131. *Ibid.*, p. 901. No author. Description of Ball-Norton magnetic separator and outline of plant at Svärto, Sweden.
132. *Ibid.*, Vol. XIX., (1899), p. 271. Similar to *Oest. Zeit.*, Vol. XLVII., (1899), p. 51.
133. *The Engineer*, Vol. LXXXVIII., (1899), pp. 249, 251. Abstract of *Iron & Steel Inst.*, Vol. LVI., (1899), p. 18.
134. *Ibid.*, p. 550. No author. Description of Bromilow's magnetic separator, a machine of the drum type.
135. *Ver. Bef. Gewerbefleisses*, (1899), p. 154. H. Wedding. A review of recent progress in magnetic concentration including a description of the Wetherill process.
136. *Zeit. angewandte Chemie*, (1899), p. 914. Witter. A historical sketch of progress in magnetic concentration during fifty years.
137. *Zeit. Berg. Hütt. u. Salinenwesen*, Vol. XLI., (1893), p. 208. No author. Results obtained in separating blende from spathic iron at the Ludwigseck mine by roasting and magnetism.
138. *Ibid.*, Vol. XLII., (1892), p. 232. No author. Short description of Kessler's magnetic separator.
139. *Zeit. Elektrochemie*, Vol. II., (1895-6), p. 641. No author. Description of the Wetherill magnetic separators.

140. *Ibid.*, Vol. III., (1896-7), p. 291. Abstract of *Eng. & Min. Jour.*, Vol. LXII., pp. 75 *et seq.*, and description of several forms of magnetic separators.
141. *Ibid.*, p. 377. W. Borchers. Abstract of *Am. Inst. Min. Eng.*, Vol. XXVI., p. 351, with comments and description of the plant of the Sterling Zinc and Iron Co.
142. *Ibid.*, Vol. V., (1899), p. 413. No author. Description of a new form of the Wetherill separator.
143. *Ibid.*, p. 340. Abstract of *Oest. Zeit.*, Vol. XLVII., (1899), p. 51.
144. *Ibid.*, Vol. VI., (1899), p. 321. E. Langguth. An article on the magnetic properties of minerals.

BIBLIOGRAPHY FOR PNEUMATIC CONCENTRATION.

145. Bilharz, O., (1896), "Mech. Aufbereitung," Vol. I., pp. 21, 75, 113 and 116. Theory and principles of different processes. Horizontal blast machine, Pape-Henneberg centrifugal separator and Krom jig.
146. Callon, J., (1886), "Mining," Vol. III., pp. 70, 104. Engis horizontal blast machine and Krom jig.
147. Davies, E. H., (1894), "Mach. Metal. Mines," p. 459. Full description of the Clarkson-Stanfield process.
148. Eissler, M., (1891), "Metallurgy Silver," p. 273. Krom's jig.
149. Foster, C. Le N., (1894), "Ore and Stone Mining," p. 589. Krom's jig, horizontal blast machine, Clarkson-Stanfield and Pape-Henneberg centrifugal machines.
150. Gaetzschmann, M. F., (1864 and 1872), "Aufbereitung," Vol. I., p. 117; Vol. II., pp. 124, 630. Dry panning, horizontal and vertical blast machines, air jig.
151. Goupillière, Haton de la, (1885), "Exploitation des Mines," Vol. II., p. 776. Theory, horizontal blast machines and Krom jig.
152. Lock, A. G., (1882), "Gold," p. 881. Dry concentration of placer gold.
153. Rose, T. K., (1894), "Gold," p. 182. Krom jig and the Clarkson-Stanfield centrifugal machine.

---

154. *Am. Inst. Min. Eng.*, Vol. VI., (1877), p. 415. J. C. Bartlett. Mathematical discussion of advantages of water over air.
155. *Ibid.*, Vol. VIII., (1879), p. 148. J. A. Church. Description, capacity, advantages and quality of work done by Paddock's pneumatic jig.
156. *Ibid.*, Vol. XXVIII., (1898), p. 490. T. A. Rickard. Description of various methods of dry concentration of placer gold in Western Australia.
157. *Ann. des Mines*, Series V., Vol. IV., (1853), p. 143. V. Pernolet. Results of experiments on fall velocities of particles in air and water. Disadvantages of the former.
158. *Ibid.*, Series VIII., Vol. XX., (1891), p. 68. M. Bellom. Description of and results obtained by a pneumatic belt machine at the Himmelfürst mine.
159. *Ibid.*, Series IX., Vol. XI., (1897), p. 123. Parent. Description of method of separating dust from coal by air blast at the Rheinpreussen colliery, at the Zollverein colliery, at St. Louis and Lagrange, and results obtained.
160. *Berg. u. Hütt. Zeit.*, Vol. XXXII., (1873), p. 341. Summary from *Eng. & Min. Jour.*, Vol. XIII., pp. 156, 161.
161. *Ibid.*, p. 402. Similar to *Eng. & Min. Jour.*, Vol. XVI., p. 138.
162. *Ibid.*, Vol. XXXIII., (1874), p. 253. No author. Discussion of the merits of air and water for concentration with special reference to Krom dry jig and Utsch wet jig and the dry concentrator at Engis.
163. *Ibid.*, Vol. XXXIX., (1880), p. 250. A. Plaminek. A description of the Hochstrate apparatus for blowing dust from coal at the Rheinpreussen colliery, with results obtained, capacity and cost.
164. *Ibid.*, Vol. XLV., (1886), pp. 485, 501, 514. C. Blömeke. Review of *Eng. & Min. Jour.*, Vol. XLIII., p. 7, and *Zeit. B. H. u. S.*, Vol. XXVI., p. 173.
165. *Ibid.*, Vol. XLIX., (1890), p. 423. H. Wedding. Description of a mill for Thomas slag using Mumford & Moodie's separator.
166. *Ibid.*, Vol. LII., (1893), p. 190. O. Bilharz. Outline of Pape-Henneberg dry process with figures on capacity, power and cost. Results of various tests.
167. *Ibid.*, Vol. LV., (1896), pp. 227, 261. C. Blömeke. Detailed description of the Pape-Henneberg centrifugal separator with results of various tests.
168. *Ibid.*, Vol. LVI., (1897), pp. 431, 440. Similar to *Oest. Zeit.*, Vol. XLV., pp. 311, 328, 348.
169. *Bull. Soc. Ind. Min.*, Series III., Vol. I., (1887), p. 42. Mathet, De Gournay and Suisse. Description of the Hochstrate air blast apparatus used at the Rheinpreussen colliery.

169a. *Can. Min. Inst.*, Vol. II., (1897), p. 273. H. Nellis Thompson. The use of an air current in dressing asbestos at Thetford, Quebec.
170. *Coll. Eng.*, Vol. XVII., (1897), pp. 392, 493, 541. H. Van F. Furman and S. R. Krom. Discussion of advantages and disadvantages of air.
171. *Coll. Guard.*, Vol. LXXIII., (1897), p. 499. No author. Description of the methods of removing dust from coal by an air blast at the Rheinpreussen colliery in Germany, and by the Anzin Co. in France.
172. *Ibid.*, Vol. LXXIV., (1897), p. 105. Abstract from *Ann. des Mines*, Series IX., Vol. XI., p. 123.
173. *Eng. & Min. Jour.*, Vol. XIII., (1872), pp. 156, 161. G. W. Baker. Short description of the Krom jig and of the results obtained by wet and dry concentration.
174. *Ibid.*, p. 180. S. R. Krom. A few advantages of air over water.
175. *Ibid.*, Vol. XVI., (1873), p. 90. E. G. Spilsbury. Description of horizontal blast machine formerly used at Engis.
176. *Ibid.*, p. 138. F. Cazin. Advantages of water over air.
177. *Ibid.*, Vol. XXII., (1876), p. 284. No author. Advantages of air over water, as shown by experiments on the rate of fall of particles in both mediums.
178. *Ibid.*, Vol. XXIV., (1877), p. 65. A Trippel. Results obtained by Krom jigs at the Manhattan mill and comparison of wet and dry jigging.
179. *Ibid.*, pp. 102, 129. Same as *Am. Inst. Min. Eng.*, Vol. VI., p. 415.
180. *Ibid.*, Vol. XXV., (1878), p. 60. A. Trippel. Results obtained with Krom jigs at Georgetown, Colorado.
181. *Ibid.*, Vol. XXXIV., (1882), p. 159. Description of the Hochstrate system of blowing dust from coal by the use of an air blast, used at the Rheinpreussen colliery.
182. *Ibid.*, Vol. XXXV., (1883), pp. 55, 71. S. R. Krom. Discussion of advantages of air over water.
183. *Ibid.*, Vol. XLII., (1886), p. 7. John Heard, Jr. Summary of results obtained from the Krom and Paddock jigs with comments. Description of the latest form of the latter.
184. *Ibid.*, Vol. XLVII., (1889), p. 187. John Heard, Jr. Some results on concentrating antimony ore with a Paddock jig.
185. *Ibid.*, Vol. LIV., (1892), p. 130. No author. Short description of the Paddock jig.
186. *Ibid.*, Vol. LVII., (1894), p. 341. No author. Description of the Tierra Seca Gold Separator, which is much like a jig, having a lateral shaking sieve box in which is a bed of shot. A continuous blast of air rises through the sieve which is sloping, and has 4 riffles on it, and may have different blasts for different compartments.
187. *Ibid.*, p. 464. No author. Description and capacity of the Pape-Henneberg centrifugal separator.
188. *Ibid.*, Vol. LX., (1895), p. 55. No author. Description of the Carn Dochan mill in Wales, which uses drying, close sizing and dry separation with the Clarkson-Stanfield concentrator. Results obtained.
189. *Ibid.*, Vol. LXVIII., (1899), p. 37. Abstract from *Am. Inst. Min. Eng.*, Vol. XXVIII., p. 490.
190. *Ibid.*, p. 453. D. D. Wolff. Description of the Waugh & Bignell dry belt concentrator, much like a Frue vanner.
191. *Inst. Civ. Eng.*, Vol. CXVI., (1894), Part II., pp. 42, 62, 102, 104. R. E. Commans. Short discussion of air versus water, and description of the action of the Clarkson-Stanfield, the Mumford & Moodie and the Pape-Henneberg centrifugal machines.
192. *Inst. Min. & Met.*, Vol. III., Part I., (1895), p. 331. J. A. Mactear. Description of dry panning and winnowing used in placer deposits of Australia.
193. *Judges Rep. on Centennial Exposition*, Vol. III., p. 231. Description of Krom jig.
194. *Min. Ind.*, Vol. V., (1896), p. 161. R. Cremer. Description of the Hochstedt apparatus with results obtained; also of a centrifugal apparatus used at Queen Mary's Colliery.
195. *Min. & Sci. Press*, Vol. LXII., (1891), p. 337. No author. Description, power and capacity of an earlier form of the Tierra Seca gold separator.
196. *Ibid.*, Vol. LXXII., (1896), p. 107. No author. Description of the Woods dry placer machine which is an inclined shaking table with cross riffles and covered with canvas up through which air is forced by bellows.
197. *Ibid.*, p. 201. No author. Description of the Reed dry placer machine which effects a separation by a vanning motion combined with an upward air blast.
198. *Ibid.*, Vol. LXXVIII., (1899), pp. 266, 292, 321, 349. Same as *Am. Inst. Min. Eng.*, Vol. XXVIII., p. 490.
199. *Oest. Zeit.*, Vol. XXVIII., (1880). A. Plaminek. Air blast for coal.
200. *Ibid.*, Vol. XLI., (1893), p. 529. J. Von Hauer. Description of the Pape-Henneberg machine and mathematical discussion of the trajectory of particles from it.

201. *Ibid.*, Vol. XLII., (1894), p. 68. L. Kirschner. Detailed description of the Pape-Henneberg dry concentrator.
202. *Ibid.*, Vol. XLIII., (1895), p. 34. No author. Results obtained in treating gold ores with the Pape-Henneberg dry separator.
203. *Ibid.*, Vol. XLV., (1897), pp. 311, 328, 348. C. Blömeke. Description of the latest form of Pape-Henneberg apparatus, with results of tests, advantages, etc.
204. *Ibid.*, Vol. XLVI., (1898), p. 161. A. Gmehling. Description and results obtained with the Lord & Banfield, and the Wood dry placer machines.
205. *Raymond's Rep.*, (1871), p. 374. G. W. Baker. Some results obtained with the use of the Krom jig.
206. *Ibid.*, (1876), p. 419. S. R. Krom. Advantages of air over water. Description of Krom's pneumatic jig and results obtained by it.
207. *Ibid.*, p. 434. Same as *Am. Inst. Min. Eng.*, Vol. VI., p. 415.
208. *Ibid.*, p. 446. Same as *Eng. & Min. Jour.*, Vol. XXIV., p. 65.
209. *Sch. Mines Quart.*, Vol. III., (1882), p. 129. H. Van F. Furman. Description of the Paddock jig and results obtained at Frisco, Utah.
210. *Ibid.*, Vol. XV., (1893), pp. 118, 121. Same as *Ann. des Mines*, Series VIII., Vol. XX., p. 68.
211. *Zeit. Berg. Hütt. u. Salinenwesen*, Vol. XXVI., (1878), pp. 126, 173. E. Althans, Description and advantages of Krom's pneumatic jig.
212. *Ibid.*, Vol. XXX., (1882), p. 279. Hochstrate. Description of the Hochstrate air blast apparatus for removing dust from coal at the Rheinpreussen colliery.
213. *Ibid.*, Vol. XXXV., (1887), p. 264. No author. Description of air blast apparatus for removing dust from coal at the Zollverein mine.
214. *Ibid.*, Vol. XLII., (1894), p. 235. Description of Hochstedt air blast apparatus for removing dust from coal at the Rheinpreussen colliery.
215. *Zeit. Ver. Deut. Ing.*, Vol. XXXIV., (1890), p. 1236. L. Stuhl. Description of two forms of continuous air blast machines and the Mumford & Moodie centrifugal machine.
216. Omitted.

Bibliography for Minor Processes.

217. Phillips, J. A., (1887), "Metallurgy," p. 475. Roasting tin ore to remove arsenopyrite, pyrite and wolframite.
218. Rittinger, P. R. von., (1867), "Aufbereitungskunde," p. 464. Discusses centrifugal force as a method of separation.
219. Schnabel, Carl, (1896), "Handbuch der Metallhüttenkunde," Vol. II., p. 398. (Also Louis, English translation, 1898, Vol. II., p. 381). Roasting tin ore for friability, and to remove arsenopyrite, pyrite and wolframite.

---

220. *Am. Inst. Min. Eng.*, Vol. XXI., (1892-1893), p. 250. R. W. Raymond. Weathering at Meronitz, Bohemia.
221. *Ibid.*, Vol. XXII., (1893), p. 569. William P. Blake. Roasting to oxidize the pyrite in a blende ore, with subsequent jigging. Illustrated.
222. *Ibid.*, Vol. XXIV., (1894), p. 490. P. G. Lidner. Roasting blende ore to make quartz friable, and to oxidize pyrite for subsequent jigging.
223. *Berg. u. Hütt. Zeit.*, Vol. XL., (1881), p. 294; Vol. XLI., (1882), p. 163, and Vol. XLII., (1883), p. 68. Editor. Separating blende and pyrite by disintegrating and screening.
224. *Cal. Rep.*, Vol. XIII., (1895-1896), p. 643. Preparation of hematite paint at the Indian Metallic Red Paint mine.
225. *Cassier's Mag.*, Vol. XIV., (1898), p. 383. Thomas H. Leggett. Weathering of diamond bearing rock at Kimberley, South Africa. p. 390. The use of a greased surface to separate diamonds from other minerals.
226. *Comptes Rendus Soc. Ind. Min.*, (1894), p. 98. Ichon. Roasting for decrepitation followed by screening. Results. Illustrated description of the Heusschen furnace.
227. *Eng. and Min. Jour.*, Vol. XIX., (1875), p. 248. Friedrich Sturm. Separation of gray copper and barite by decrepitation and screening.
228. *Ibid.*, Vol. LXIX., (1900). p. 375. Geo. W. Winter. Description of the Peck centrifugal separator. Illustrated.
229. *S. Afr. Min. Jour.*, Vol. VII.,(1898), p. 921. The directors of the Robinson Diamond Mining Co., report that direct crushing of the diamond ore involved much loss which is avoided by preliminary weathering. The New Bultfontein Diamond Co. had a similar experience.

PART III.

ACCESSORY APPARATUS.

CHAPTER XIX.

ACCESSORY APPARATUS.

Under this head are described machines and apparatus that form connecting links between the different machines of a mill; and also those that control speed of running and value of products. They are: bins, samplers, feeders, distributors, water regulators, conveyors, elevators, pumps, launders, unwaterers, driers, etc.

Bins and Receiving Floors.

§ 618. The varying production of ore in a mine calls for receiving bins or floors at the mill, large enough to serve for storage when the mine is producing faster than the mill can treat, and thus provide ore for the mill when none is being received from the mine. It often happens that mining or milling is done for 24 hours, while hoisting or shipping is done for only 12 hours. A common rule for the size of bins is that they shall hold at least 24 hours production of the mine, and they are often much larger. Custom mills, which treat ores from a number of mines, returning the concentrates and receiving pay for the work done, require more storage room than others, and must have separate bins for individual lots. Thirty mills report capacities of bins ranging from 1 to 7 times the daily capacities of the mills, the average being 3. The largest ratio is for a custom mill (Mill 77). Five others report capacities of bins from 0.1 to 0.8 of the daily capacity of the mill.

Ore bins must be strongly constructed and braced in order to support their heavy loads and to withstand the shocks due to dumping the ore into them. They may have flat bottoms where economy in first cost requires it, or where increased capacity is sought. These, however, require more labor to completely discharge the ore than do sloping bottoms. The sloping bottom is made by laying timbers down the slope; and then boards are laid across the timbers, or else stringers are laid across the timbers, and the boards are laid down the slope on the stringers. In either case there should be a second layer of boards breaking joints with the first, to make the bottom tight. The bottom will wear better when the grain of the wood runs down the slope than when it runs across. Bins should be lined with plate iron where the ore strikes when it is dumped in.

The labor of discharging a bin depends upon its shape. In some mills the bottom slopes in three directions to a chute in front. In Mill 37 it slopes in four directions to a central chute. Either of these will discharge all of the ore without shoveling, if the slope is sufficient. In other mills the bottom slopes in only one direction, and therefore the ore cannot be completely discharged without shoveling. Where the bottom is flat the ore will partly discharge itself until the angle of friction is reached, but the remainder must be removed by shoveling. Twenty-three mills have bins with sloping bottoms, the steepest being 52°, the gentlest 30°. Sixteen of the twenty-three have slopes from 42½° to 45°. All these discharge directly to the first machine. Ten mills have flat-bottomed bins, from nine of which the ore is wheeled or shoveled to the first machine, and from one it is shoveled to the spalling floor. In eleven mills

the ore is dumped on receiving floors, from which it is shoveled or wheeled to the first machine.

Ore is brought to the bins in cars, skips, wagons or barrows. For cars the end dump and side dump styles are most common, and they are generally discharged at the side of the bin. In large mills, when convenient, the tracks are run over the tops of the bins and drop-bottom cars are used. To make use of the full bin capacity, the ore must be so fed that it will fill the bin; the top filling does this. Sometimes the ore is dumped on a grizzly, the undersize of which goes directly to the bin, while the oversize goes to a breaker and then to the bin. The discharge from the bins is commonly through a sliding gate, operated either by a rack and pinion, or by a lever. The discharge chute slopes 45° or more. A hinged discharge chute is used at the rock house bins of Mill 46, and at the concentrates bins of Mill 38. The raising of the chute stops the flow of ore. This chute may be operated by a lever, or, if heavy, by a block and tackle. The rock house bins of Mines 44, 46, 47 and 48 have double V bottoms, with tracks beneath, and with discharge chutes spaced so that several cars can be filled at one time. Mill 43 has a bin divided by a partition down the center. One side can be discharged while the other is being filled, a scheme which may give facility in making up mill accounts. This matter is discussed in § 363.

Intermediate bins are used in some mills to act as reservoirs, so that a temporary stoppage of one part of the mill shall not necessitate the stoppage of the parts preceding and following. At Mill 91 there is a large stock house, with a capacity of 16,000 tons, between the preliminary crushing plant and the separating plant. If an accident requires the former plant to be shut down, this stock house provides a supply of ore to keep the latter plant running; and if the latter shuts down the stock house provides storage for the ore from the former plant. The capacity of the stock house is sufficient to permit either the crushing or the separating plant to run for about two days while the other is shut down. At Mill 92 there are six storage bins between the crushing and the separating plants; and their capacity is sufficient to allow either plant to run for an hour or two while repairs are being made on the other. At Mill 26 there are three bins for the storage of jig middlings previous to regrinding. They have a capacity for at least 24 hours' supply.

Concentrates bins are described under *settling tanks* (§ 349). They are placed there because the concentrates are usually collected by settling from water. In many mills, however, the concentrates are wheeled from the individual machines to the bins.

SAMPLERS.

§ 619. Sampling consists in obtaining, from a lot of ore, a small portion to weigh out for assay, which shall represent as perfectly as possible the exact proportions of the constituents in the original batch of ore. This involves two operations which proceed by alternate stages: (1) cutting down or reducing the weight of the sample, and (2) crushing or reducing the size of the particles.

Sampling and assaying are required in milling to determine the value of the ore; to see what losses are taking place in the tailings, and what is the quality of the middlings; and to determine the value of the concentrates. Consequently the selection of the proper methods of sampling is very important. This work must be so conducted as not to lose dust or fine slimes which belong to the ore or product, as these fine particles are often very rich, and a larger error would be made by their loss than the loss of weight alone would imply.

A sample may be taken from a stream of ore while it is in passage from one place to another, in which case it is called a running sample; or it may be taken

from a car load lot or an accumulated product. A running sample is taken either by hand or machine; but in most other cases only hand methods are used.

§ 620. HAND SAMPLING is done in various ways, which will now be noticed.

Fractional Selection by Shovel.—When ore is being moved by a shovel, either to load or unload it, every fifth, tenth or twentieth shovelful, according to the richness of the ore and the distribution of the minerals, may be thrown one side for a sample. Similarly, when unloading ore in sacks, every fifth or tenth sack may be set aside. This sample, after being crushed to reduce the size of lumps, may again be reduced in quantity by setting aside alternate shovelfuls as a sample. This routine may be repeated several times until the sample needs crushing again, but a smaller shovel must be used when its capacity becomes too large a proportion of the lot. In case the ores are exceptionally difficult to sample, for example, where very rich lumps occur in a barren gangue, it will be safer to mix them by ring and cone, as described under *quartering*, previous to shoveling for fractional selection.

Quartering.—The crushed ore when brought to the sampling floor in sacks or barrows, is deposited evenly in a large ring. The attendant then shovels it into a conical heap in the center, while walking slowly around the ring. He should not shovel too much ore in passing once around, lest a part of the ore be too much bunched. Every shovelful should drop systematically upon the apex of the cone, all sides of the cone thus receiving contributions from each shovelful of ore. The ore is now raked out into a new ring by a shovel or hoe and re-coned, or it may be directly shoveled into a new cone on another part of the floor. This process of re-coning will be repeated until the batch is satisfactorily mixed, and then the cone is systematically flattened by raking the ore out from the apex, while walking around it. The flattened cone is marked off into quarters, with a stick or board on edge, along two diameters at right angles to each other. Two opposite quarters are shoveled away for the sample, taking care to save all the fine as well as coarse ore belonging to the sample; and, if the lumps are small enough, it may be mixed as before and again cut down.

If there is much variation in the sizes of the ore particles, as there is very likely to be, the fine tends to separate from the coarse, and thereby prevent thorough mixing. This separation is much lessened when the ore is somewhat damp,[1] but the moisture must not be sufficient to make the ore ball up into large masses. The floor on which this work is done must be clean, smooth and free from cracks; hence it is best to have it covered with iron or steel plates.

Fractional Selection by Split Shovel, Riffle, and Jones Sampler.—The split shovel is a fork in which the prongs are separate scoops, each scoop being the same width as the space between the scoops. It is laid upon the ground, and a shovelful of ore spread over its surface, the shovel being moved back and forth across the scoops while the ore is sliding off. The split shovel is now lifted, leaving on the floor the ore that went into the spaces between the scoops, and what went into the scoops is emptied on a heap by itself. The riffle is the same thing, except that it is larger and has a small handle on each side instead of a shovel handle on one side. It is used in the same way as the shovel. The riffle or shovel is very useful in the assay office when the quantities become small and the sizes fine. The Jones Sampler is a riffle consisting of two sets of scoops sloping in opposite directions, instead of alternate scoops and spaces. The scoops discharge the ore as fast as it is poured into them, the even numbers to one side the odd numbers to the other. For either of these devices, each scoop should be at least four times as wide as the largest particle of ore.

Cheese-scoop Sampler.—(Fig. 480.)—To make this, nearly half the circumference of an iron pipe is cut away except for a few inches at the upper end. This is slipped into a slightly larger pipe which is similarly cut away, and which

has its lower end hammered to a point. A T is screwed on the upper end of the inner pipe, and a handle screwed into the T. The point on the lower end of the outer pipe enables the sampler to easily force it into a body of fine ore. When doing this the pipes should be in the relative positions shown in section *a;* the inner one is then turned into the position *b,* and twisted back and forth till it fills with ore. It is then returned to the position *a,* and both pipes are withdrawn with the sample. This tool is very convenient for sampling fine concentrates in bins, cars or sacks. Such samples should be taken systematically from all parts of the bin or from a certain proportion of the sacks.

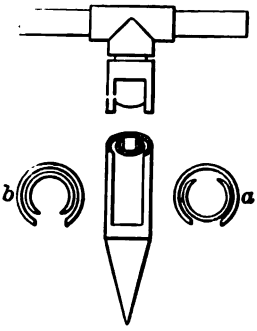

FIG. 480.—CHEESE SCOOP SAMPLER.

Pipe Sampler.—To sample a pile of hematite concentrates that had weathered for years at Iron Mountain, Missouri, and which varied from sand to hickory nut size, Taylor[13] used a 2-inch pipe 13 feet long. This was driven into the pile to a depth of 12 feet at intervals of 10 feet, using 6-pound sledges. To prevent upsetting the end of the pipe by hammering, a collar and plug were used. The collar was of ⅜-inch iron, and was shrunk upon the end of the pipe. The plug entered the pipe 6 inches, and had a projecting shoulder to transmit the blow. The pipe was drawn out by a mule or by two men. With this ore the steepest angle at which the pipe could be withdrawn, and be sure of carrying with it the whole sample, was 30°. With a moist fine ore a steeper angle could be used. After withdrawing the pipe, and having it in a vertical position a few hammer taps removed the ore.

The Grab Sample.—This method consists in measuring off the surface of an ore heap into squares, and taking approximately equal quantities of ore from the corners of the squares, accepting whatever comes, coarse or fine, rich or poor. A tape measure or a knotted cord laid over the heap may also be used, a sample being taken at each foot mark or under each knot. The method is not as accurate as the others, because only part of the ore is accessible. There are cases, however, where for lack of means to take a more accurate sample, this method is accepted.

Dipper or Bucket Sample.—Samples of the running products of individual machines, and of the general mill tailings may be taken by diverting the whole stream into a dipper or bucket at stated intervals, for example, every 15 minutes, for some definite period, such as 30 seconds. The principles laid down for *mechanical sampling* (see § 621) apply here. The total sample for 12 or for 24 hours is settled, dried and then cut down for assay.

The general mill tailings are often accompanied by so much water that a dipper or bucket is too small to catch a good sample. In such a case a box of about 10 cubic feet capacity is sometimes mounted on wheels, so that it can be pushed under the end of the tailings launder. Once an hour this box is filled and withdrawn; and at the end of the hour a plug is removed to run off the clear top water. (As to the catching of the fine slimes, see § 869.) The sample is removed from the box once in 24 hours.

In all this class of sampling great care must be taken that no accumulations of concentrates in eddies or corners, or adhering to the discharge lips of the machines, be dislodged and get into the sample. For example, the tailings of amalgamated plates should be sampled before rather than after going to the mercury traps, because there may be periodical rushes of accumulated sulphurets out of the traps. On the other hand, particular care must be taken that no amalgam is scraped into the sample from the lower end of the amalgamated plate.

Moisture Samples.—Since the assays of ore are always made upon dry samples (because a constant weight and value can be obtained in no other way), and since all ores are more or less damp when sampled, it is necessary to take moisture samples to determine the weight of dry ore in any lot. This moisture sample should be taken either just before or just after the ore is weighed. It must be taken by a method that is rapid and does not require crushing, further cutting down or other handling before testing; and should therefore be independent of the regular sample, unless the latter is small enough so that the whole of it can conveniently be dried. Each portion taken for the sample must be put into a covered pail immediately, so that there shall be no evaporation before the test is made. As soon as possible the sample is rapidly mixed, and a portion weighed out to be dried; or better, the whole sample may be dried. The difference between the wet and dry weights, divided by the wet weight, gives the percentage of moisture in the wet ore.

§ 621. MECHANICAL SAMPLING.—There are seven essential features of a perfect mechanical sampler: (1) it must take the whole stream of ore (wet or dry) part of the time, and not part of the stream all the time, because the values are never evenly distributed across the stream; (2) the scoop that cuts out the sample must move completely across and out of the stream in one direction at each cut, for, if it enters from one side, and is then withdrawn on the same side without having completely crossed the stream, more ore will be taken from the side at which the scoop enters and leaves than from the other side;* (3) in order to take equal proportions from all parts of the stream, the scoop must move at a uniform rate, and the top of the scoop must, in all positions, be at right angles to the direction of the stream. This last condition, in the case of a revolving scoop, is well obtained from a vertical stream and a horizontal scoop; (4) if the scoop that cuts out the sample revolves about an axis, two sides of the scoop should converge toward the axis in order to take equal proportions from all parts of the stream; and the scoop may be adjustable to take larger or smaller proportions of the ore; (5) the interval of time between cuts should be constant; (6) the scoops must be deep and broad enough so that ore that has once gotten into them will not bound out again; and if the scoops have closed bottoms they must not be allowed to fill up so that some of the ore runs over, as this would produce a concentration of the heavy minerals, especially when the ore was carried in running water; (7) the machine should be simple and easily accessible for cleaning, to avoid danger of contaminating subsequent samples. For the best results the feed to the machine should be regular.

The Snyder Sampler (Fig. 481) has the form of a circular pan with flaring sides, which is set edgewise on a revolving horizontal shaft. A spout, *b*, projecting through the flaring side, passes under the feed spout, *a*, at each revolution of the machine and delivers a sample into the sample spout *c*. During the rest of the revolution the material is diverted into the spout *d*.

The Vezin Sampler (Fig. 482) has two hollow, truncated cones bolted together at their large bases. They are attached to a cast iron spider, which is keyed to a vertical shaft. This shaft is supported by a collar at the upper end, is held in place by two guide boxes, and is driven at a constant speed in one direction by beveled gears at the upper end. The upper cone carries one or more scoops, *a*, the openings of which have the form of sectors of a circle. The ore is fed from the spout *b*; and the portion that enters the scoops passes into the interior of the cones, and is conducted to the sample bin, or to the rolls if it is to be further crushed. The main portion of the ore falls into a hopper and is spouted to storage bins or cars.

* Though such a scoop may take only part of the stream at a given instant, it does take a true section across the stream and virtually takes the whole stream part of the time.

The Collom Sampler (Fig. 483) consists of one or more diverting scoops which pass through a stream of ore at stated intervals. The scoops are mounted on a

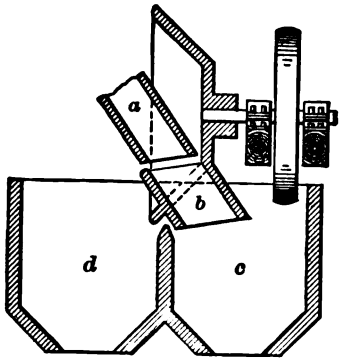

FIG. 481.—SNYDER SAMPLER.

FIG. 482.—VEZIN SAMPLER.

horizontal arm carried by a vertical shaft. As a scoop passes through the stream of ore it cuts out a sample and delivers it, through a vertical spout beneath, into the sample bin or box, after which the run of ore goes on as before. The

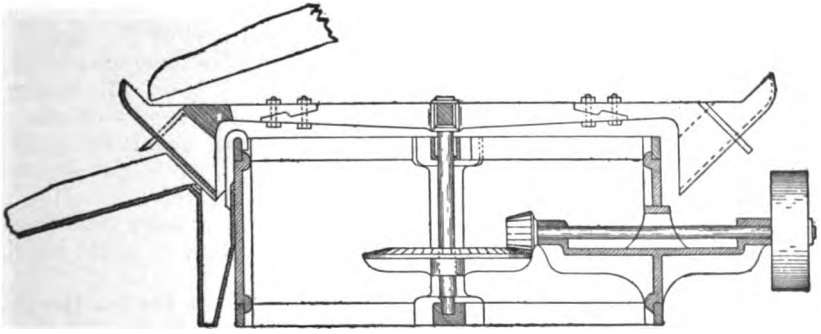

FIG. 483.—COLLOM SAMPLER.

shaft of the machine is supported and held in position by a step at its lower end and a guide box at its upper end. The machine is driven at a constant speed in one direction by beveled gear and pinion.

In the *Brunton Sampler* (Fig. 484) the deflector *ab* is carried on the horizontal shaft *c*, and is given a forward and backward motion by means of the crank wheel, *d*, the connecting arm, *e*, and the lever, *f*. The end of the feed spout is brought down near the oppositely sloping faces, *a* and *b*, of the deflector; and the latter oscillates far enough so that the scoop *a*, cuts completely across the stream of falling ore. A sample is thus deflected to the left by the scoop, *a*, and the rest of the ore is deflected to the right by *b*.

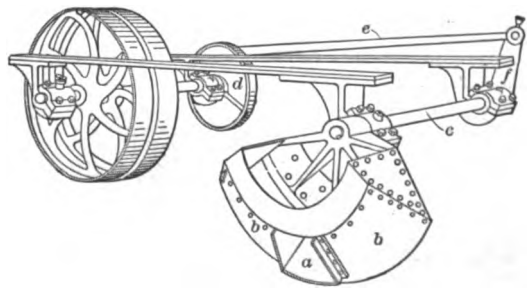

FIG. 484.—BRUNTON SAMPLER.

For the sake of simplicity neither of the above machines is made adjustable for varying the percentage of ore taken for a sample, but either of them could easily be so made if it was desired. Either of them is applicable for the feed or for the products of any machine in a mill, or for the general tailings.

At Mill 87 a Vezin machine samples the smelting ore after it has been crushed to pass through a two-mesh screen. It has one scoop and takes one-sixteenth of the lot for the sample. At Mill 94 a Vezin machine with two scoops takes one-eighth of the ore for a sample, after it has been crushed to about ¾ inch. This machine makes 15.2 revolutions a minute. At Mill 86 a Collom machine samples all of the ore after it has been crushed to pass through 9-mm. screen holes. In this case there is a single horizontal arm with a radius of 1 foot 6 inches, revolving eight times a minute. The scoop is ¾ inch wide. At Mill 38 a modified Collom machine is used to sample the general mill tailings. In this case the scoop is carried by and delivers into a horizontal pipe, which is screwed into and revolves with a vertical pipe leading down to the sample box. At Mill 61 the general tailings run into a reaction wheel, the stream reacting on the walls of ten 1-inch horizontal pipes that have 90° elbows at the outer ends. Nine of these pipes are 2½ feet long and the streams are delivered horizontally through the elbows at their ends; the tenth or sample pipe is 3 feet long and the stream is delivered vertically downward from its end. The vertical receiving pipe is 5 inches in diameter. A sample is taken at each revolution as the sample pipe passes over a slot in the cover of a bucket. The machine gives satisfaction at this mill, but it does not conform to the rule of taking the whole stream part of the time. It takes its sample from one part of the stream part of the time.

COMPARISONS.—A good mechanical sampler has an advantage over hand sampling because it eliminates the possibility of intentional error. Moreover, it is in general cheaper. Fractional selection depends for its accuracy on the probability that there will be less error in taking many small quantities distributed through the lot than in taking a few large quantities; while the accuracy of quartering depends on thorough mixing, which requires careful attention to the precautions mentioned in § 620. Quartering requires more labor than fractional selection, and is not practicable for very large lots, because it would require an excessive amount of space.

§ 622. DATA FROM PRACTICE.—The following figures show the practice that has been developed by the experience of various engineers for reducing the size of the particles, and the weight of the sample, and are quoted by them as giving accurate results.*

E. E. BURLINGAME, DENVER, COLORADO.

Low grade ores.

Take every 20th shovelful of the lot of ore, crush to 4 mesh and quarter to 100 pounds.

100 pounds, crush to 20 mesh and reduce to 5 pounds.

5 pounds, crush to 100 mesh and take several 6-ounce samples.

---

* Figures by Philip Argall, based on experience with Colorado ores, are given in Vol. X., of *The Institution of Mining and Metallurgy*. Owing to the very recent date of their publication the author did not get them in time to consider them with those of the other authorities. Argall recommends for difficult gold telluride ores containing 10 to 15 ounces gold per ton which have been crushed by breakers to an average cube of about 1 inch, that from a lot of 100 tons a sample of 20 tons be taken by the first mechanical sampler. This sample is then crushed to ¼ inch and sampled down to 2 tons by the second sampler. This is crushed to 8 mesh (⅛ inch) and reduced by riffling to 250 pounds, which is dried and crushed to about 30 mesh (0.0171 inch) and riffled down to about 15 pounds. This is passed through a sample grinder which crushes to 90 or 100 mesh and is then reduced by riffling to 1 pound, which is ground on a bucking board to pass through a 120-mesh (0.004-inch) sieve. His general rule for lots of ore of the kind stated above is as follows:

Lot of ore, crush to 1 inch, take 20% of original lot.
20%, crush to ¼ inch, take 1⅛% of original lot.
1⅛%, crush to 8 mesh, take 0.0785% of original lot.
0.0785%, crush to 30 mesh, take 0.005% of original lot.

He says that in practical work one takes larger quantities of the finer material, simply as a matter of extra precaution, more especially so in mills where all the ore is ultimately ground fine.

Rich or "spotted" ores.

Take every 5th shovelful from the lot of ore, crush to 4 mesh and quarter to 500 pounds.
500 pounds, crush to 20 mesh and reduce to 10 pounds.
10 pounds, crush to 100 mesh and take several 6-ounce samples.

Very rich ores.

Crush the entire lot to 20 mesh and quarter to 500 pounds.

A. R. LEDOUX, NEW YORK CITY.

Medium ores.

50 ton lot, crush to 2 or 3 inches, take 10 tons.
10 tons, crush to 1 or 2 inches, take 2 tons.
2 tons, crush to 1 inch, take 1,000 pounds.
1,000 pounds, crush to $\frac{1}{2}$ inch, take 250 pounds.
250 pounds, crush to $\frac{1}{8}$ inch, take 25 pounds.
25 pounds, crush to $\frac{1}{30}$ inch, take 3 pounds.
3 pounds, crush to $\frac{1}{100}$ inch (100 mesh) and assay.

Free gold, gold in pyrite, or copper sulphide ores.

50 ton lot, crush all to 2 inches or less, take out 10 tons.

Copper matte—50 ton lot, crush all to 1 inch, take out 10 tons.

CHARLES BUTTERS, LONDON, ENGLAND.

Fairly uniform ores.

50 ton lot, crush to 3 inches, take 5 tons.
5 tons, crush to 1 inch, take 1,000 pounds.
1,000 pounds, crush to $\frac{1}{2}$ inch, take 100 pounds.
100 pounds, crush to $\frac{1}{8}$ inch, take 10 pounds.
10 pounds, crush to $\frac{1}{30}$ inch, take 1 pound.
1 pound, crush to 100 mesh, take assay sample.

"If the ore might be separated into different values after crushing, on account of the richer part of the ore being more friable, I should be inclined when I had got down to 1,000 pounds to proceed by fifths instead of tenths, but with the same mesh."

PAUL JOHNSON.[11]

Silver-lead (?) ores assaying not more than 100 ounces silver per ton.

Quarter the lot of mine ore to 2 tons.
2 tons, crush to $\frac{3}{4}$ inch, quarter to 500 pounds.
500 pounds, crush to $\frac{1}{2}$ (?) inch, quarter to 250 pounds.
250 pounds, crush to 10 mesh, quarter to 20 to 35 pounds.
20 to 35 pounds, crush to 12 mesh, split shovel to 2 to 4 pounds.
2 to 4 pounds, crush to 80 mesh and take 5 samples of 6 to 8 ounces.

S. H. PEARCE.[7]

Lot crushed to 2 inches, take 1,200 pounds.
1,200 pounds, crush to 1 inch, take 300 pounds.
300 pounds, crush to $\frac{1}{2}$ inch, take 80 pounds.
80 pounds, crush to $\frac{1}{4}$ inch, take 20 pounds.
20 pounds, crush to $\frac{1}{8}$ inch, take 5 pounds.
5 pounds, crush to $\frac{1}{16}$ inch, take 2 pounds.

Pearce's figures are given as being suitable for the gold ores of the Rand district, South Africa, in which the gold ranges from perhaps 0.25 to 1 ounce per ton, and is in fine particles, partly free and partly contained in pyrite.

§ 623. PRINCIPLES OF SAMPLING.—As already stated, sampling involves two operations, which proceed by alternate stages: (1) cutting down, or reducing the weight of the sample, and (2) crushing, or reducing the size of the particles. The finer the crushing for any given weight the more accurate will the sample be. There is, however, for any ore a size of particle for each weight finer than

which the advantage gained by further crushing is practically *nil;* and further crushing, therefore, simply involves useless work. To settle upon a system of sampling we must adopt a series of weights for the cutting down, and a corresponding series of sizes to which the ore must be crushed before being cut down. The simplest rule, adopted by Vezin[14] in 1866, is: first, to decide what weight (w) should be taken for assay or analysis after the ore has been ground to 100-mesh (approximately 0.125 mm. diameter); second, to compute the number (n) of maximum sized grains passing through a 100-mesh screen that would weigh (w); and third, to cut down to a weight after each crushing which will be equal to n of the maximum sized particles.

This rule may be said to use a constant number of particles whatever their size. The following figures show the weights of different sizes required by this rule on the basis of 0.1 assay ton (2.917 grams) of ore through a 100-mesh screen (0.125 mm.):

128	mm.	3,131	metric tons.
64	"	391	" "
32	"	48.9	" "
16	"	6.12	" "
8	"	764.6	kilos.
4	"	95.57	"
2	"	11.95	"
1	"	1.493	"
0.5	"	186.7	grams.
0.25	"	23.33	"
0.125	"	2.917	"

The above rule demands finer crushing than practice indicates to be necessary, and it is, therefore, more expensive than is wise. The sampling works and assayers have made approximations to rules deviating from the above, to save the excessive cost, and yet be accurate enough for purposes of buying and selling; and several sets of such figures have been given in § 622.

Brunton[4] has suggested the following considerations as a basis for sampling: (1) the ratio of the assay of the richest particle to the average of the ore; (2) the relative specific gravities of the heavy mineral and the gangue; (3) the ratio between the weight of the largest actual particle that will pass through a given sized square hole, and the weight of the largest cube that would go through the same hole; and (4) the number of richest particles likely to be in excess or deficit. Brunton's results, however, show quantities that are largely in excess of practice; and the author thinks this is due to the omission of the following principle: (5) the larger the single lump the more nearly it represents a perfect sample. If, for example, on the one hand a lot of ore weighing 50 tons was in a single lump, that one lump would be a perfect sample. If on the other hand the ore was so fine that there were no included grains, then no single lump could be a true sample. We see, therefore, that in the coarser sizes it is not necessary, either practically or theoretically, to take as large a sample as is required by the rule that calls for the equivalent of a constant number of maximum sized particles. This last principle appears to be of more consequence in settling the law of cutting down than all the others, and in fact completely overshadows them. It is applied, either consciously or unconsciously, in all practical sampling. The author believes that the most satisfactory rule will be based on the practice developed in the buying and selling of ores. Now an examination of the data quoted in § 622 shows that in each case the weights vary approximately in proportion to the squares of the diameters of the particles. By adopting the rule that the weight shall be proportional to the square of the diameter of the largest particles, we shall obtain a set of figures that will in all probability meet

the approval of practising engineers; and which have a definite basis, and thereby do away with a great deal of guess work. Such a set is given in Table 369, and, for convenience of interpolation, on Fig. 485. Each column in the

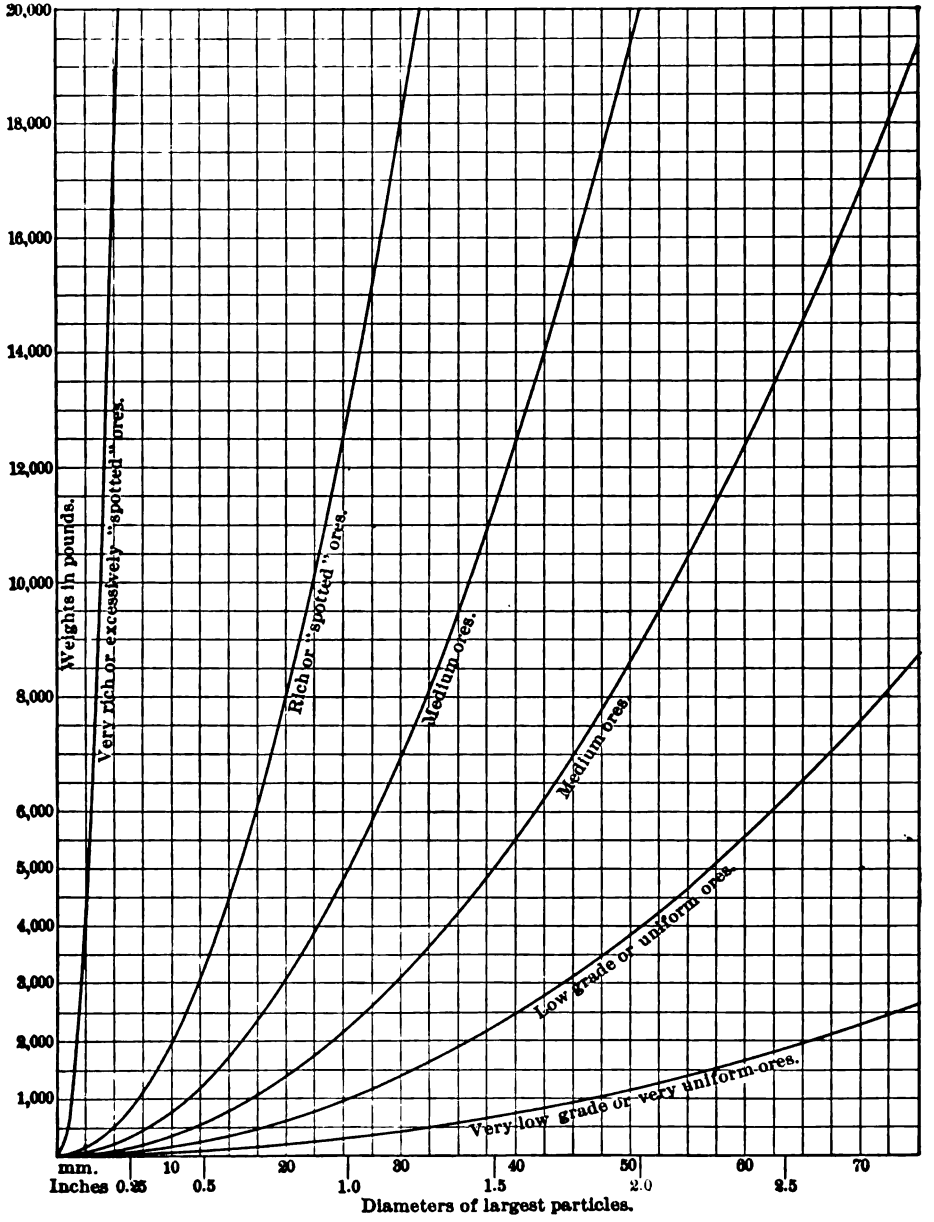

FIG. 485.—SIZES AND WEIGHTS OF ORE FOR SAMPLING.

table is based on one of the figures quoted above from practice—the very low grade or very uniform ores (that is, those in which the values are very evenly distributed) on Pearce's 1,200 pounds of 2-inch lumps; the low grade or uniform

TABLE 369.—WEIGHTS TO BE TAKEN IN SAMPLING ORE.

Weight.		Diameters of Largest Particle.					
Grams.	Pounds.	Very Low Grade or very Uniform Ores.	Low Grade or Uniform Ores.	Medium Ores.		Rich or "Spotted" Ores.	Very Rich or Excessively "Spotted" Ores.
		Mm.	Mm.	Mm.	Mm.	Mm.	Mm.
.....	20,000	207	114	76.2	50.8	31.6	5.4
.....	10,000	147	80.3	53.9	35.9	22.4	3.8
.....	5,000	104	56.8	38.1	25.4	15.8	2.7
.....	2,000	65.6	35.9	24.1	16.1	10.0	1.7
.....	1,000	46.4	25.4	17.0	11.4	7.1	1.2
.....	500	32.8	18.0	12.0	8.0	5.0	0.85
.....	200	20.7	11.4	7.6	5.1	3.2	0.54
.....	100	14.7	8.0	5.4	3.6	2.2	0.38
.....	50	10.4	5.7	3.8	2.5	1.6	0.27
.....	20	6.6	3.6	2.4	1.6	1.0	0.17
.....	10	4.6	2.5	1.7	1.1	0.71	0.12
.....	5	3.3	1.8	1.2	0.80	0.50	.....
.....	2	2.1	1.1	0.76	0.51	0.32	.....
.....	1	1.5	0.80	0.54	0.36	0.22	.....
.....	0.5	1.0	0.57	0.38	0.25	0.16	.....
90	0.2	0.66	0.36	0.24	0.16	0.10	.....
45	0.1	0.46	0.25	0.17	0.11	.....	.....
22.5	0.05	0.33	0.18	0.12	.....	.....	.....
9	0.02	0.21	0.11	.....	.....	.....	.....
4.5	0.01	0.15	.....	.....	.....	.....	.....
2.25	0.005	0.10	.....	.....	.....	.....	.....

ores on Butter's 1,000 pounds of 1-inch lumps, which gives nearly the same results as Johnson's 500 pounds of ¾-inch lumps; the medium ores on Ledoux's 10-tons of 2 to 3-inch lumps; the rich or "spotted" ores (that is, those in which the values are quite unevenly distributed) on Burlingame's 500 pounds of 4-mesh (5 mm.) lumps; and the very rich or excessively "spotted" ores (such as many free gold ores and telluride ores) on Burlingame's 500 pounds of 20-mesh (0.85 mm.) ore. This last class is very difficult to sample; so much so that usually the only satisfactory way is to make a mill test of 10 tons or more, keeping a careful account of the value extracted and of all weights, and then sampling and assaying the tailings. An example of this is given in § 893. High grade ores (although their values may be quite uniformly distributed) are classed with "spotted" ores, because their values must be determined with greater proportional accuracy than low grade ores, in order to prevent considerable loss to the buyer or the seller.

It is not intended that the reduction in size shall proceed by all the stages indicated in either column of Table 369; but whenever any weight given in the first column is taken as a sample, the ore should first be crushed to the corresponding size shown in one of the other columns. For example, with a 20,000-pound (10 ton) lot of low grade ore, we might crush the entire lot to 25.4 mm. and take 1,000 pounds for a sample. If this was all reduced to 2.5-mm. size the quantity could be reduced to 10 pounds; and then by grinding to 0.80 mm. (about 20 mesh) we could safely reduce the weight to 1 pound. If, however, it was necessary to produce the least amount of fines, the successive weights of sample might be 5,000, 1,000, 200, 50, 10 and 1 pounds; with corresponding reductions in size to 56.8, 25.4, 11.4, 5.7, 2.5 and 0.80 mm. When a lot is crushed fine enough to permit a large reduction in weight, it is safer to make this reduction by several successive mixings and quarterings than by a single operation.

In exceptional cases where serious losses would occur in concentrating or smelting if the ore was crushed as finely as indicated above, it is considered better to make a certain sacrifice in the accuracy of sampling by taking smaller samples.

Automatic Feeders.

§ 624. Automatic Feeders are mechanical devices intended to avoid the necessity of hand feeding. When once set they should deliver the ore as nearly as possible at a definite rate (in pounds per minute), and they should be adjustable to feed fast or slow. In the case of a stamp battery the rate is automatically regulated by the action of the battery itself. The feeder should not concentrate the ore, delivering richer material at first and poorer later, or *vice versa*, but must deliver a uniform quality of material throughout. Clayey or other sticky ores cause difficulty with some feeders.

Hendy's Challenge Feeder for gravity stamps, Fig. 486, consists of a circular table, *a*, inclined about 12½°, and slowly revolved by beveled gears beneath.

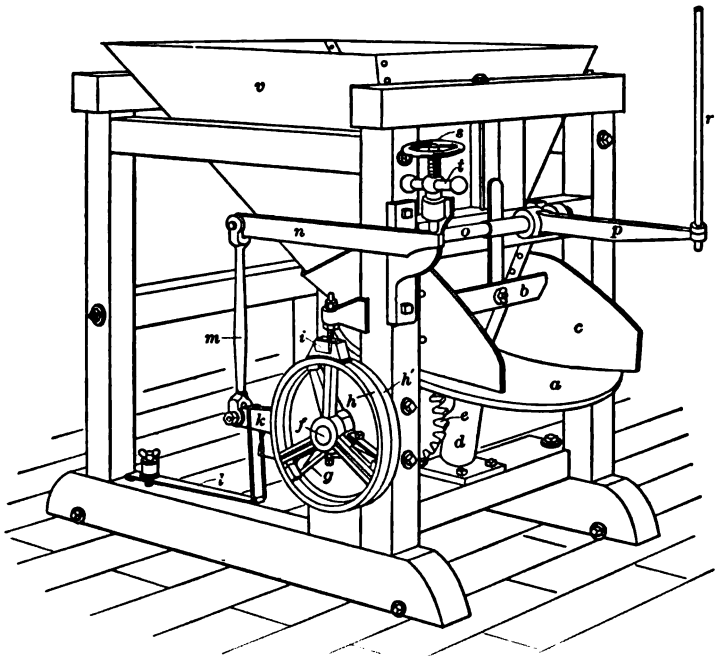

FIG. 486.—HENDY'S CHALLENGE ORE FEEDER.

A sheet iron hopper, *v*, delivers the ore on one side of this table, and a fixed scraper, *c*, is so arranged that when the ore reaches a certain point it is scraped into the stamp mortar. The quantity of ore delivered from the hopper to the table is regulated by an adjustable gate, *b*. The table stands upon a short inclined shaft and step, *d*. It has a beveled gear cast upon its under side. Power is brought to it by the pinion, *e*, the shaft, *f*, the friction pawls, *g*, the lever, *k*, the connecting rod, *m*, the lever, *n*, shaft, *o*, lever, *p*, and the buffer rod, *r*. A spring, *l*, returns the lever, *k*, to its place after each stroke, but the friction brake, *i*, prevents the shaft from turning back. The lever, *k*, is attached to the inner rim, *h'*, which is loose upon the shaft, *f*, and drives by friction the outer ends of the pawls, *g*. The inner ends of the pawls are attached to the shaft, *f*. When the ore level on the dies of the stamp battery is low enough, the tappet of the stamp strikes the buffer, *r*, and feeds more ore. The amount of each movement is limited by means of the hand screw, *s*, which is clamped in place by the lock nut, *t*. The feeder is sometimes used for other

machines than stamps, and is then operated by a cam and spring acting on the lever, *k*, the amount of movement of the lever being adjusted by hand screw and lock nut; or it may be operated by an adjustable eccentric at the upper end of the rod, *m*, and in that case the spring, *l*, is thrown out of action. This machine feeds even clayey and sticky ores without much difficulty.

The Gates Feeder (Fig. 487) consists of a stirrup, *a*, with curved bottom, hung by two supports, *b*, and oscillating beneath the chute, *c*, on top of which the feed hopper is set. In the middle of the chute is a fixed cross partition, *d*, which nearly touches the stirrup, while the front and back sides of the chute approach only within two or three inches of it. The stirrup extends laterally far enough beyond the two sides of the chute to prevent the pressure of the ore above from discharging anything when the stirrup is not moving, but as the latter swings the central partition forces out a certain quantity of ore from each side alternately. At the point *e* the stirrup is connected by an arm to a crank

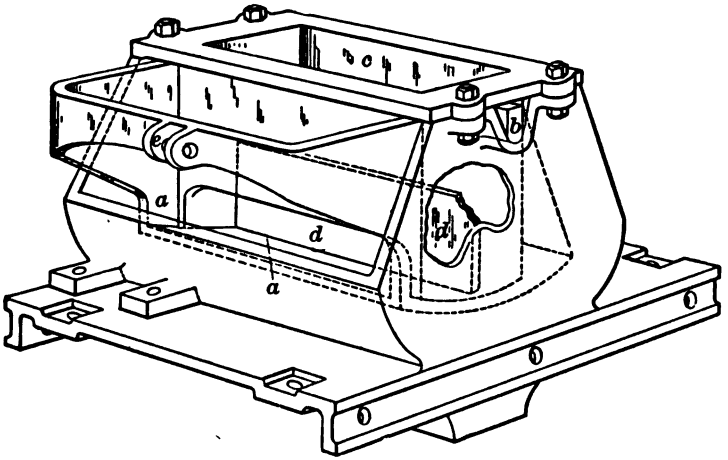

FIG. 487.—GATES ORE FEEDER.

pin, which is made adjustable to vary the rate of feed. This feeder was especially designed for rolls, to be driven from the roll shaft; but is adapted to various other uses. A modification is applied to stamps, in which case it is driven by a buffer-rod, lever and linkage. This form discharges only from the front, the back of the hopper coming down close to the stirrup, and forcing the ore out as the stirrup swings backward. The machine is said to successfully feed either sticky or granular ores.

The Roller Feeder consists of a horizontal roller revolving slowly at the bottom of a hopper, the discharge of which is stopped by the roller except as the latter carries out the ore. The roller may have either a smooth or a corrugated surface, and is revolved by belt, ratchet and pawl, or otherwise. It works well with granular ore, but is not so good for sticky ore. Among the roller feeders are the Templeton and the Hammond. Roller feeders are shown in Figs. 467*a* and 468*a*.

The Tulloch Feeder (Fig. 488) has a sheet iron hopper *a*, with a jerking chute *b* beneath it. This chute is suspended from a frame by two rods at the sides and one behind. It is given a forward motion by the cam *c*, and bell crank lever *d*; and is then drawn back sharply by the spring *e*. The forward motion carries a small quantity of ore from the hopper, and the quick return causes the ore near the end of the chute to drop off. The quantity of ore fed at each stroke is controlled by an adjustable gate at the bottom of the hopper. The machine is also mounted for gravity stamps, being driven from a falling stamp by a system

of levers. In this case the chute receives its sudden backward motion when the stamp tappet strikes the buffer-rod, and is then pushed forward by a spring. The Tulloch is good for granular, but not for sticky ores.

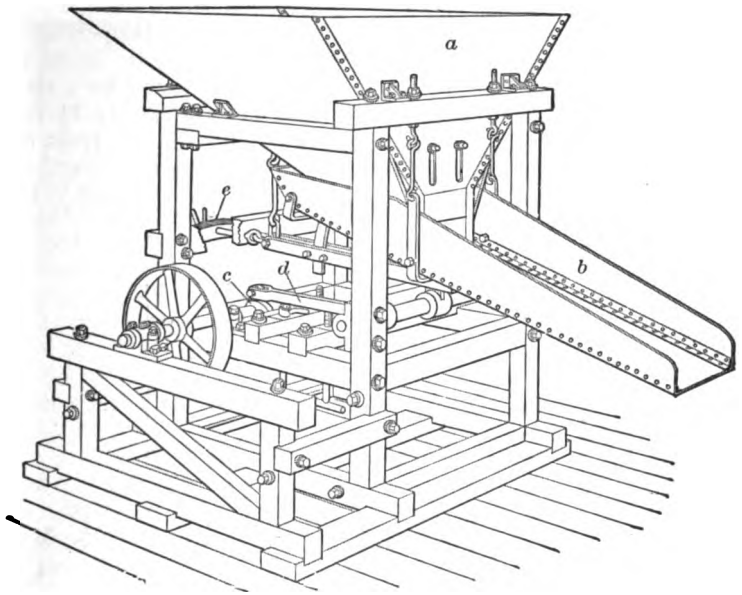

FIG. 488.—TULLOCH ORE FEEDER.

Fig. 489 shows a simple and effective feeder for dry and comparatively fine material. The hopper *a* delivers to an inclined chute *b*, which is hinged at *c* and receives vertical vibrations from the revolving octagonal shaft *d*. The shaft makes 125 to 130 revolutions a minute. The length of the vibrations can be varied by means of the supporting cord and roller *e*.

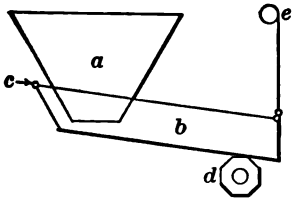

FIG. 489.—BUMPING ORE FEEDER.

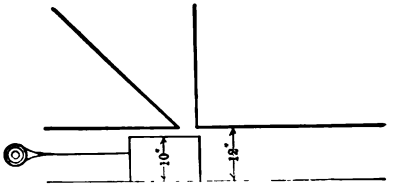

FIG. 490.—SLIDING BLOCK ORE FEEDER.

Sliding Block Feeder.—In Mill 30 a sliding block feeder delivers the ore to No. 1 rolls. This feeder (Fig. 490) consists of a plunger which, by means of a crank and connecting rod is moved forward and back in a trough beneath a hopper so as to alternately open and close the apex of the hopper. The plunger is made of ¼-inch steel plate braced inside. It is 10 inches high and 15 inches wide. As the plunger moves backward a certain amount of ore drops in front of it, and on the return stroke is pushed forward to the rolls. The total throw of the crank is 1¼ inches. The trough slopes ¼ inch per foot toward the rolls.

Cornish Feeders have no moving parts, but are operated by the action of a stream of water directed against a bank of ore. In Fig. 491, *a* is a chute with its bottom sloping from the two sides to the middle, *b* is a pipe feeding water centrally, and *c* is a hopper. The two sides and the upper end of the hopper are supported an inch above the chute by corner supports, while the lower end *d* reaches down to the chute. Ore being charged into the hopper, a stream of water from the pipe *b* gradually washes it down, discharging it on both sides of the hopper. To prevent backing up of the water, followed by a sudden rush of ore and water, the chute must have a considerable slope, say 1½ to 3 inches per foot. The space *e* must be wide, perhaps 4 inches, and the front end of the hopper reach to the bottom of the chute. With the details as shown, a granular ore is delivered regularly and evenly from both sides of the hopper. The feeder,

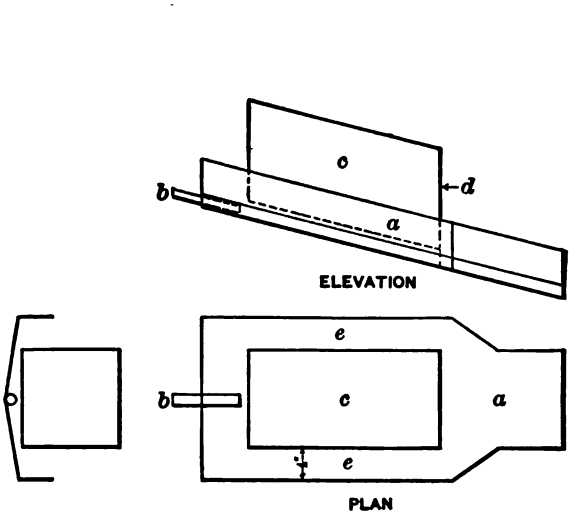

FIG. 491.—CORNISH ORE FEEDER.

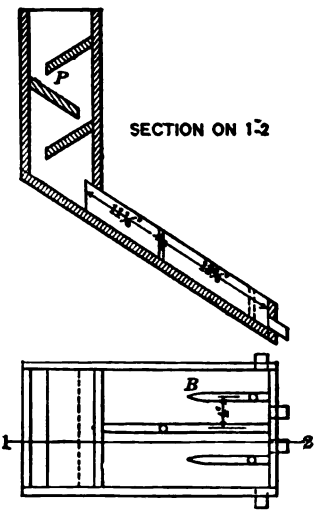

FIG. 492.—DISTRIBUTOR AT MILL 22.

however, is not adapted for sticky ores or for coarse sizes. The details shown in the figure are those of a laboratory apparatus, but the same general principle is used in mills.

Summary.—The following summary indicates the extent to which mechanical feeding is used: Of 31 mills using gravity stamps, 25 use Hendy Challenge feeders for the stamps, 2 use roller feeders, 1 uses an undesignated style, and in the 3 other cases jig tailings either run to the stamps by gravity or are fed by hand. Although the principal use of automatic feeders is for gravity stamps, they are also considerably used for other machines. For example, Tulloch feeders are used for rolls in Mills 26, 32, 34 and 35, for the Bryan mill in Mill 26, and for trommels in Mills 27 and 28. Hendy feeders are used for rolls in Mill 87, for Huntington mills in Mills 27 and 28, and for No. 1 trommel in Mill 37. Roller feeders are used for rolls in Mills 22 and 91, for the Griffin mill in Mill 72, and for screens in Mill 91. In Mill 94 a Briart automatic bar screen (see end of § 270) feeds a breaker.

Distributors.

§ 625. Distributors are used for two purposes: to divide a stream of ore evenly between two or more machines (mill distribution); and to distribute the ore evenly to a single machine (machine distribution). The object of the first is to give each machine its proper amount and kind of work; the object of the second is to give the right amount of work to each part of a single machine.

Mill Distributors.—At Mill 44 the pulp from each steam stamp is distributed to four classifiers by a box distributor. The pulp enters at one side by a spout 16 inches wide. On the opposite side is a delivery spout, which branches into two, each of which is 6 inches wide. A delivery spout 6 inches wide also extends from each of the two remaining sides.

In Mill 33 the spigot products of the surface current classifiers are distributed to two slime tables by a box which has two spigots and no overflow. In Mill 38 a similar box is used to distribute the ore and water from the Huntington mills to three hydraulic classifiers; and in Mill 39 two boxes (each 3 feet long, 2 feet wide and 2½ feet deep) distribute the undersize of the 4.5-mm. trommels to four hydraulic classifiers. Distributing tanks that have an overflow of water while the ore is delivered from spigots, are described in § 339.

The Parson's Distributor (Figs. 312*a* and 312*d*), is used in Mill 25. It consists of a smaller vertical cylinder within a larger one. The annular space between the two is divided into segments by radial partitions; and each of these segments connects with the inner cylinder through a vertical slot. The feed ore enters the bottom of the inner cylinder from a centrifugal pump below, passes through the slots into the segmental compartments, and is discharged from these through pipes screwed into the bottom. Dimensions are shown in the figure. A similar method is used for slime table pulp in Mill 44, the pulp being delivered upward from a centrifugal pump through the bottom of a square box, from each side of which a pipe conducts the material to a slime table.

In Mill 22 the oversize of No. 2 and No. 3 trommels is distributed to jigs by a series of baffle plates and swinging partitions, as shown in Fig. 492. The ore is evenly distributed across the apparatus by passing over the baffle plates *P*, and is then divided by the three swinging boards *B*, and discharged through the four holes.

In Mill 78 the overflow from the classifier is divided up, for the canvas tables, at the point of overflow (see Fig. 256*a*), instead of being conducted a considerable distance in a launder before being divided. The advantage of this method is that the overflow of the classifier is uniform all the way across the stream, but, after it has run some distance in a launder, the heavier or the larger grains are likely to all concentrate in the center or at one side.

In Mill 20 the overflow of the hydraulic classifier is distributed to the vanners by a distributing trough, from the bottom of which, at successive points, 1¼-inch pipes extend downward. The amount discharged through each of these pipes is controlled by a button which can be swung over the top of the pipe. A dam made of a piece of ⅞-inch board, extends across the trough just beyond each pipe to form a pocket that shall assist the pipe to get its proper share of pulp.

Machine Distributors.—A common method of distributing the spigot product of a classifier across the feed end of a jig is to let the material discharge on a sloping fan-shaped apron, the wide lower end of which is the same width as the jig screen. In Mills 22, 31, 32, 35 and 47 the slime tables are fed by fan-shaped distributors with diverging blades. At Mill 78 this same form is used for canvas tables, with the addition of a dam at the foot of the distributor, perforated with small holes 2 inches apart. (See Fig. 401*b*.) In Mill 86 fine pulp is distributed to a classifier by a fan-shaped apron with diverging blades followed by diamond-shaped dividing blocks. (See Fig. 257*a*.)

The Woodbury vanner uses a special form of distributor, which consists of a revolving pot delivering through a spout to the successive divisions of a fan-shaped distributor with radiating blades. (See Fig. 387.) In Mill 61 an adjustable conveyor is used to distribute the ore to different parts of a bin. (See § 627.) The distributors used between gravity stamps and amalgamating plates are described in § 521.

In Mill 91 an effective device (Fig. 493) is used to evenly distribute the ore to the drier, after being reduced to a maximum diameter of about ½ inch (12.7 mm.). The ore being fed in quantity into the hopper, 1, is divided into a number of streams by the diverging partitions, 2, at the bottom of which is the X-shaped divider, 3. Each of the upper arms of the X is a series of alternate dams and openings, each dam on one side being opposite a space on the other side; but the two lower arms of the X have no openings. The ore is thus divided into a number of streams, half of which go to the right and half to the left, and are

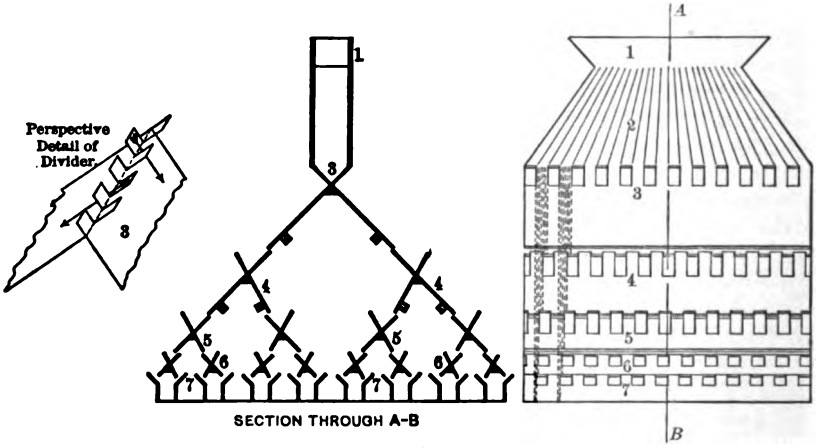

FIG. 493.—EDISON'S DISTRIBUTOR.

discharged upon the two dividers, 4, the dams of which lap half way on the openings of the divider, 3. The same division of the ore continues through the dividers 4, 5, 6 and 7, the result being that the ore is distributed in a large number of equal streams.

WATER REGULATORS.

§ 626. It is important that water should be supplied to all the machines under a constant head. Without this it is impossible to regulate the supply to the machines. The best way to get a constant head is to have a large supply tank which constantly overflows. Wherever several machines draw water from the same pipe, this pipe must be so large that the regulation of water on one machine affects only slightly the quantity supplied to the others. Strainers to remove sticks and other obstructions, must be used on pumps lifting water to supply tanks, and it will often be necessary to use fine strainers on the pipes connecting the supply tanks with the machines where very close regulation of water is needed. The reader is referred to Trautwine's Civil Engineer's Pocketbook, and to Kent's Mechanical Engineer's Pocketbook, for rules and formulæ for planning pipes for mill work.

To get the right quantity of water on starting after a stop, dial cocks are very convenient. They have been adopted by several manufacturers for the cocks

supplying hydraulic water to classifiers. Another method is the two-cock system: one cock is permanently set for a desired quantity of water, while the other is used to let on and shut off the water; in place of the first cock a pipe union with a perforated disk of metal may be used, the size of the hole in the disk being such that it will pass the quantity of water desired.

Appliances for Conveying and Elevating Ore and Water.

Ore or sand, with or without water, may be lifted and conveyed in a number of ways: by conveyors, bucket and platform elevators, sand wheels and pumps.

CONVEYORS.

§ 627. There are two chief classes of conveyors: 1st, those of the endless belt type, which move forward with the product to be conveyed (for example, rubber belts, chain belts with pans, chain belts with buckets, chain scrapers moving in troughs); and 2d, those in which the product is moved by the propelling motion of a screw thread or by the jerking of an oscillating tube or trough. Those of the first class are used for conveying on an up grade as well as on a level or a down grade; those of the second only for level or down grade.

Rubber Belt Conveyors, which are more commonly used than any other form, consist of endless belts running on two large pulleys or drums, and with intermediate supporting rollers. The belts have to be of special quality of rubber to withstand the wear, while cotton duck furnishes the strength. The greatest wear comes on the middle portion of the belt, and to overcome this the Robins belt has a thicker layer of rubber in the center.

The design of the supporting and guiding rollers is important. There are five different designs: in the five-roller form (Robins, Fig. 494) 1 is the main sup-

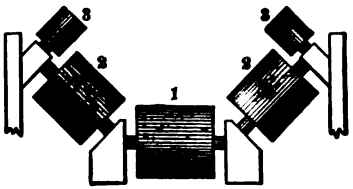

FIG. 494.

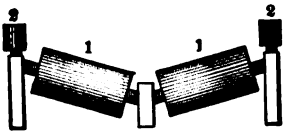

FIG. 495.

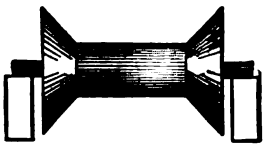

FIG. 496.

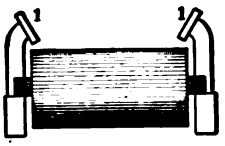

FIG. 497.

porting roller, 2, 2 give the belt a trough shape, and 3, 3 guide the belt. In the four-roller design (Jeffrey, Fig. 495), 1, 1 support the belt and give it a trough form, while 2, 2 guide the belt. The conical troughing roller (Robins, Fig. 496) is not suitable for belts more than 14 inches wide, because the unavoidable slip on the beveled portion of the roller wears the belt. With the single roller with skirt boards (Fig. 497) the ore is prevented from creeping off the edge by the skirt boards 1, 1, but the belt is apt to be cut by lumps that become wedged beneath the skirt boards. With the plain, single roller without skirt boards, the belt can carry only a thin layer of ore, and therefore the ca-

pacity is small compared with the other forms. In these last two forms the belt is guided by the end rollers, which are made crowning in the center. The supporting rollers are placed near together (4 to 6 feet apart, according to the amount of ore carried) to avoid sagging of the belt. The idlers beneath, for the return of the belt may be twice as far apart as the upper set, and may be simple flat rollers, whatever the design of the upper set.

It is better to apply the power at the delivery end than at the receiving end, because in that case the tight part carries the ore. The pillow blocks of one of the end rollers should be adjustable by set screws, to take up slack in the belt. The driving pulley should be of sufficient diameter to transmit the power without slipping. In order to lessen the wear on the belt the ore should be delivered to it with as little drop and at as small an angle as possible, and should be moving forward with the same velocity as the belt. In Mill 92 the ore from No. 1 breaker is separated by a screen, the fine falling upon the belt first, and so protecting it from the tearing action of the coarse lumps.

Rubber belt conveyors usually discharge at one end, but at Mill 84 the ore is discharged at any desired point along the side by fixing an oblique scraper at that point. The Robins Conveying Belt Co. make special trippers for this purpose in which the belt moves up a short incline to a roller, then passes downward and backward, and around another roller, and again moves along in its normal direction. In making the reverse turn at the top the belt delivers its load into a side-discharging hopper. The tripper is so constructed as to move back and forth automatically, and thus distribute the ore in a long bin; but it may also be set to deliver all the ore at any one place.

The belt conveyor in Mill 61 is arranged to distribute the ore in the bin, which is 52 feet long. The conveyor is 29 feet long, and the frame that supports it runs upon a truck, and can be rolled in the direction of its length so as to deliver the ore to different parts of the bin. Power is applied at the receiving end by means of a rope and grooved pulley, with a take-up which allows the truck to move to different positions. The belt runs in either direction.

Pan or Plate Conveyors consist of a series of steel pans or plates riveted or bolted to link belts. In some cases rollers are attached to the link pins, one on each side of each pan, to support the conveyor; in other cases the pans run upon stationary rollers. At each end of the conveyor the belts pass over polygonal sprocket wheels, and power is received through the one at the delivery end. Edison puts in an extra sprocket wheel near the end so as to drive by a direct pull. These sprocket wheels also serve to guide the belt. The pans have rectangular, flat bottoms, and may have sides flaring upward. If the conveyor has little or no slope the pans are open at the front and back, and the front edge laps on the rear edge of the preceding pan in order to prevent any ore from dropping through. If, however, the conveyor has an appreciable slope upward the pans have raised backs. When simple flat plates without raised sides are used, they require skirt boards along the sides to prevent the ore falling off.

A Scraping Conveyor consists of a series of steel scrapers riveted or bolted to the links of an endless chain, and drawn along in a steel trough. In some cases rollers attached to the link pins run on a track and keep the scrapers off the bottom of the trough. In other cases the scrapers move along on the bottom.

A Bucket Conveyor consists of a series of steel buckets hung on trunnions between two parallel link belts in such a manner that the buckets remain upright in whatever direction they move. As the buckets move continuously they require special arrangements for filling, and they can be emptied at any point by automatic tipping arrangements. They are considerably used in coal storage plants.

In Mill 26 a conveyor is used consisting of ordinary elevator buckets fastened to a rubber belt. It rises 16 feet in a length of 47 feet 6 inches, and runs 240 feet per minute. The belt is old belt from No. 1 or No. 2 elevator. The cups are 7 inches long, 4½ inches wide and 4½ inches deep made of No. 2 (Birmingham Wire Gauge) steel and placed 20 inches apart. They cost $0.60 each and last 1 to 2 years. The head pulley is 28 inches diameter and the boot pulley is 24 inches. The cost of repairs other than for cups is nominal.

The Edison distributing conveyor is a bucket conveyor with narrow transverse slots running the full length of the bottom of the buckets. The buckets are suspended between links which join the axles of the carrying wheels, and their bottoms are about 3 inches above the bottom of a long trough that has a number of transverse discharge slots at suitable intervals. In Mill 91 the buckets are 2 feet 7 inches long, 6½ inches deep, and about 8 inches wide; and the axles of the wheels are 1 foot from center to center. When the conveyor is first started a certain amount of ore distributes itself along the trough up to the bottoms of the buckets. The buckets move along this false bottom, discharging their contents through the slots in the trough beneath. Each slot receives about the same quantity of ore from each bucket until the latter is empty. The lower edge of the bucket is chilled to withstand wear. The conveyor is driven by a sprocket wheel on the straight part of the chain near one of the end sprocket wheels. Each journal has a dust tight oil reservoir on it. (See Fig. 529.) One of these conveyors at Mill 91 is 350 feet long, has a speed of 150 feet a minute and a capacity of 600 tons per hour. It requires 5 horse power when running empty, and but little more when running full.

Table 370 shows the dimensions and kinds of belts used for conveyors in some of the mills.

TABLE 370.—ENDLESS BELT CONVEYORS.

Mill Number.	Conveyor No.	Length. Feet.	Length. Inches.	Width of Belt. Inches.	Kind of Belt.	Speed. Feet per Minute.
16					Old rubber elevator belt.	240
30	1	95		(a)	Pans	60
30	2			(b)	Pans (c)	60
43		7	2	10	6-ply rubber	35
61		29		20	Rubber	
84				12	Old rubber belt	28
90				18	Rubber	112
91	1			31	Robins rubber	
91	3	350			Edison scraper	150
91	4	500			Edison buckets	150
91	6	60			Edison buckets	150

(a) 23¼ inches at top, 21 inches at bottom, 6 inches deep. (b) 23¼ inches at top, 21 inches at bottom, 8 inches deep. (c) These pans have backs 5 inches high, because the conveyor has an upward slope of 39° 50′.

Screw Conveyors are revolving shafts, horizontal or nearly so, with attached helical blades resembling screw threads which work in semi-circular troughs. They are sometimes used to convey comparatively fine dry ore, as for instance in Mill 94, where one of them distributes the undersize of the 20-mesh trommels to several bins. Their most common use in connection with ore treatment is in dry crushing silver mills, where they collect the pulverized ore from the dry stamps, and carry it to the elevator on its way to the roasting furnaces.

Jerking Troughs.—At Mill 44 the coarse concentrates from the automatic discharges on the coarse jigs are conveyed to the shipping car in a jerking pipe. This is about 2 inches in diameter, slopes slightly downward, and is perhaps 30 feet long. It is fed through a slot in the pipe at the upper end by a hopper, is driven by a disk motion and delivers the concentrates to the shipping car.

ELEVATORS.

§ 628. The following machines are used to elevate ore and water: bucket elevators, platform elevators, sand wheels and various forms of pumps.

BUCKET ELEVATORS are used for gravel or sand, with or without water. They are endless belts with buckets attached, running upon two pulleys, one above and one below. The direction of lift, in different cases, varies from vertical to an inclination of perhaps 15° or 20° toward the downcoming side. With an inclined belt, intermediate supporting rollers are provided for the upgoing side of the belt. The upper pulley generally drives the belt, receiving power from a side pulley. The lower pulley is hung in sliding boxes, which can be moved by tension screws to tighten the belt. The whole is often housed in a tight box, the lower part of which is called the boot, and is provided with a receiving spout. The boot sometimes extends beyond the rest of the housing and is open at the top. There are doors in the housing to permit repairs, oiling and cleaning. Some mills have semi-circular metal boots made so as to be dropped for ease of cleaning, etc. The buckets on the belt come down on the under side, scoop up the ore from the boot as they turn on the lower pulley (or receive the ore directly from a spout just after they turn the pulley), carry it to the top on the upper side of the belt, and throw it out to the discharge spout by centrifugal force as they pass over the top pulley. The discharge spout should be covered for a few feet, to confine the ore in the spout. In order to prevent excessive wear at the point where the ore strikes the spout, it is well to construct the latter so that a protecting cover of ore shall be retained at that point. If this is not done the wear may be taken by a cast iron plate. The speed of travel must be such that the buckets will throw their contents far enough, by centrifugal force, to make a clean discharge. The belt speeds found in the mills, with a few exceptions, range from 200 to 400 feet a minute, 300 feet being the most common figure.

As elevators are subject to a good deal of wear they should be inspected frequently. Six of the mills report that inspections are made daily, one every three days, one weekly, one monthly, and one whenever the mill is stopped for any considerable time.

The belt is usually of rubber. Of 30 mills using bucket elevators, 26 use rubber belts, 3 have malleable iron link belts and 1 has wire ropes. The material for rubber belts should be of special quality, having an extra coating of rubber to withstand the wear of the ore. The ends of the belt are laced together in the usual way, and the buckets are riveted or bolted to the belt. The spaces between the buckets vary in the mills from 12 to 24 inches between centers, with one exceptional case of 36 inches. The belt is usually wide enough to extend ½ inch or 1 inch beyond the buckets on each side. The life of rubber belts, given in Table 371, is from 2 months to 4 years. This great range is largely due to differences in the amount of ore handled, and in the amount of idle time; but it is also partly due to different qualities of belt.

The Gandy belting, used for elevators in Mill 92, is made of cotton duck with a number of longitudinal rows of stitching. The warp threads are larger than the woof threads, for the sake of strength. After the belt has been stitched it is thoroughly saturated with linseed oil, and then painted.

Link belts are of two kinds: the pin-and-link, and the detachable link, in which the cross bar of one link mates with the one or two hooks of the next. The buckets are riveted or bolted to the links of the chain. This form of belt has the advantage of great strength; all parts are nearly equally strong. They have no weak point like the lacing of the rubber belt. Their disadvantage is in the wear of metal, due to grit. This is particularly true when they are run wet. The chains usually run over sprocket wheels, though with special forms of links

TABLE 371.—BUCKET ELEVATORS.

Abbreviations.—Ft.=feet; In.=inches.

Mill and Elevator Number.	Height of Lift.	Diameter of Upper Pulley.	Belts.				Buckets.					
			Width.	Material.	Life.	Speed of Travel. Feet per Minute.	Length.	Width.	Depth.	Distance Between Buckets.	Material.	Life.
	Ft.	Inches.	In.				In.	In.	In.	In.		
10-1	....	.....	12	Belt	.....	.....	....	....	....	....	.....	.....
2	....	.....	12	"	.....	.....	....	....	....	....	.....	.....
3	28	.....	8	"	.....	.....	....	....	....	....	.....	.....
4	50	.....	12	"	.....	.....	....	....	....	....	.....	.....
5	15	.....	12	"	.....	.....	....	....	....	....	.....	.....
15-1	38	24	12	5-ply rubber...	40 weeks...	228	12	7	6	16½	Pressed steel.....	3 years.
16	16	.....	10	" ...	3 to 4 years.	300	8	5	5	.....	.....	2 years.
17	31	.....	10	" ...	....	300	8	5	5	.....	.....	.....
18	....	36	16	Rubber.....	.....	340	....	....	....	....	.....	.....
20-1	14	30	10	9-ply rubber...	9 weeks....	360	9	5	5	12	Pressed steel.....	9 weeks.
2	30	30	6	6-ply rubber...	.....	360	....	....	....	24	....	60–120 days.
21-1	....	24	12	" ...	24 weeks...	220	10	5½	4	21	.....	6–8 months.
2	20	24	8	4-ply rubber...	6 months ..	200	6	4	....	21	.....	24 weeks.
24	36½	24	....	Link chain....	10 months..	62	10	6	4	20	Riveted sheet steel	10 months.
25	16	24	12	4-ply rubber...	" ..	195	12	3	4	24	Pressed steel.....	18 months.
26-1	46½	*a* 30, 24	14	10-ply rubber..	6 months...	240	12	5½	6	18	....	6 months.
2	41	.....	12	8-ply rubber...	" ...	240	10	5	5	36	.....	12 months.
27-1	18	30	12	6-ply rubber...	2 months...	300	12	7	6	24	Malleable iron....	3 months.
2	....	30	12	" ...	3 months...	300	12	7	6	24	.....	.....
3	....	30	....	.....	.....	300	....	....	....	24	.....	.....
4	30	30	....	.....	.....	300	....	....	....	24	.....	.....
5	26	30	....	.....	.....	.....	....	....	....	....	.....	.....
29-1	....	.....	18	Belt.....	.....	.....	10½	5½	....	....	.....	.....
2	....	.....	10	"	.....	.....	8	5½	....	....	.....	.....
30-1	29	*a* 24, 30	16	7-ply rubber...	20–24 weeks	375	14	7	....	22	.....	16 weeks.
2	12	24	12	6-ply rubber...	24 weeks...	300	10	6	....	24	.....	16 weeks.
3	30	.....	12	" ...	.....	.....	10	6	....	24	.....	.....
31-1	38	42	8	" ...	12 weeks...	200	11	....	....	16	.....	.....
2	38	36	12	7-ply rubber...	.....	200	11	....	....	16	.....	.....
3	30	36	12	" ...	.....	200	11	....	....	16	.....	.....
32	50	.....	14	8-ply rubber...	5 months...	300	14	....	....	22	.....	5 months.
34-1	26	.....	12	5-ply rubber...	.....	312	10	6	....	18	.....	.....
2	20	.....	12	" ...	.....	.....	10	6	....	18	.....	.....
3	33	.....	12	" ...	.....	320	10	6	....	18	.....	.....
35-1 *b*	40	40	12	7-ply rubber...	24 weeks...	470	11	6	....	16	Malleable iron.....	52 weeks.
2	40	40	12	" ...	.....	.....	11	6	....	16	.....	.....
37-1	....	48	16	Belt.....	.....	.....	....	....	....	....	.....	.....
2	....	48	16	"	.....	.....	....	....	....	....	.....	.....
38-1 *c*	50	24	12	8-ply rubber...	30 weeks...	350	11	6	....	15	.....	15 weeks.
2	30	36	12	" ...	24 weeks...	300	12	7	....	15	.....	40 weeks.
39-1	20	30	10	" ...	16 weeks...	400	10	6	....	12	.....	16 weeks.
2	35	36	12	" ...	14 weeks...	400	12	7	....	12	....	14 weeks.
4	55	.....	12	" ...	.....	400	12	7	....	12	.....	.....
40-1	60	36	14	10-ply rubber..	3 months...	358	12	7	....	15	Malleable iron....	16 weeks.
2	32½	36	12	" ..	16 weeks...	358	12	7	....	15	"	16 weeks.
3	....	.....	12	.....	26 weeks...	.....	12	7	....	....	.....	52 weeks.
4	49	36	12	10-ply rubber..	24 weeks...	400	12	7	....	16	.....	52 weeks.
5	....	36	20	" ..	.....	.....	18	8	....	16	Malleable iron	.....
6	45	36	20	" ..	43 weeks...	400	12	8	....	16	"	5–6 years.
42-1	30	.....	12	.....	.....	200	....	....	....	....	.....	.....
3	30	.....	12	8-ply rubber...	.....	200	11	5	....	....	.....	.....
43-1	28	24	12	6-ply rubber...	18 months..	250	10	5½	....	12	Malleable iron	2 years.
2	41	.....	12	" ...	" ..	.....	10	5½	....	....	.....	.....
3	22	.....	8	" ...	.....	.....	8	5	....	....	.....	.....
4	43	.....	14	8-ply rubber...	8 months...	.....	12	7	....	....	.....	.....
82 (*d*)	....	.....	12	Belt.....	.....	270	11½	10	6	24	.....	.....
86-1	46	.....	16	"	.....	240	10	....	....	....	.....	.....
87	20	.....	....	"	.....	.....	....	....	....	....	.....	.....
89-1 *e*	....	.....	8	"	.....	.....	10	....	....	....	.....	.....
2	35	.....	10	"	.....	.....	12	....	....	....	.....	.....
90	40	.....	(*f*)	Link belt	....	100	5	8	....	....	.....	.....
91-1	60	(*g*) 36	....	(*h*)	.....	150	36	18	18	....	.....	.....
2	....	(*g*) 36	....	Wire rope.....	.....	.....	24	18	7	24	.....	.....
4	60	(*g*) 36	....	"	.....	250	24	18	7	24	.....	.....
92-2	....	.....	....	(*i*)	.....	145	10	6	....	12	.....	.....
4	....	.....	6	2-ply "Gandy" ..	.....	260	6	4	....	16	.....	.....
5&6	....	.....	4	3-ply "Gandy" ..	.....	90	4	3	....	16	.....	.....
7	....	.....	10	6-ply "Gandy" ..	.....	480	10	6	...	14	.....	.....

(*a*) These are the diameters of the top and bottom pulleys respectively. (*b*) Carries 250 to 300 tons of ore in 24 hours. (*c*) Carries 150 tons of ore in 24 hours. (*d*) Two of these elevators. One carries 66 tons of sand and 360 tons of water; the other carries 44 tons of sand and 240 tons of water in 24 hours. (*e*) Carries 125 tons of ore in 24 hours. (*f*) The links are 5 inches wide. (*g*) This is a smooth pulley. (*h*) Eight wire ropes ¾ inch in diameter. (*i*) Heavy steel chain.

smooth wheels are used. Link belt elevators are sometimes provided with special dumping devices which do not require centrifugal force to discharge them, and they can, therefore, be run at a slower speed than is necessary with rubber belts. The reader is referred to the catalogues of manufacturers for these devices.

Wire rope has displaced the usual rubber belt for elevators in Mill 91. Eight wire ropes ¾ inch in diameter are held at proper distances apart by a series of transverse iron grooved clamps with bolts; and the buckets are attached to these clamps. The ropes are very flexible (probably that known as tiller rope), and run over smooth pulleys 38 inches in diameter. When the elevator has a slope the buckets carry flanged wheels, which run on side tracks; but when the elevator is vertical the belt is kept tight by a 1,000-pound weight suspended from the boxes of the lower pulley. Mr. Edison reports that for No. 2 elevator a rubber belt lasted three days and a link belt lasted a week, while the wire rope elevator lasts indefinitely. It should be said, however, that the ore is not wet.

The buckets for elevators are made of pressed steel, riveted sheet steel, or malleable iron. The lists of the Jeffrey Manufacturing Company show buckets of any width (that is, projection from the belt) from 2 to 8 inches; of any length (that is, dimension across the belt) from 2 to 26 inches; and of any thickness of plate from 0.083 to 0.203 inch (No. 14 to No. 6 B. W. G.). The depths are not stated. In all cases the buckets are water tight, except when it is desired to raise the ore and leave the water behind, and then the buckets are perforated.

The capacity of a bucket elevator depends on the size of the buckets, the space between the buckets and the speed of travel. The following figures, for the common sizes of buckets used in the mills are based on data from the catalogue of the Jeffrey Manufacturing Company. The buckets are assumed to be 12 inches between centers, and the speed 300 feet a minute. It is also assumed that every bucket is full; but as the feed to elevators is never perfectly regular a liberal margin has to be allowed on these theoretical capacities. The manufacturers, in making estimates, sometimes deduct as much as 20 or 30%.

Buckets.		Capacity. Cubic Feet per Hour.	Buckets.		Capacity. Cubic Feet per Hour.
Length Across the Belt. Inches.	Projection from the Belt. Inches.		Length Across the Belt. Inches.	Projection from the Belt. Inches.	
6	4	510	11	6	2,500
8	5	1,250	12	7	3,565
9	5	1,410	14	7	4,150
10	6	2,275	18	8	6,680

PLATFORM ELEVATORS.—As a rule these are used only where material comes irregularly, or where it is more convenient to handle it by carloads. They are used for various products in Mills 27, 28, 64 and 92.

§ 629. SAND WHEELS are vertical revolving wheels that carry buckets on the inside of very wide rims. Sand and water are delivered to these buckets when at the lowest part of their revolution, from spouts on one or both sides of the wheel; and discharged when near the highest point into launders on one or both sides. These wheels are especially adapted to elevating mill tailings with water, when there is not enough fall to deliver them to the depositing ground by gravity. They are built for varying lifts, up to about 50 feet. Small wheels, frequently called *raff wheels*, are also used for low lifts, to return water and sand for retreatment, for example, on the Wilfley table, which uses a little wheel 2 feet 9 inches in diameter to return its middlings. Their simplicity of construction and operation makes the running expense much less than for belt elevators. The wear is reduced to that upon two large journals and upon the buckets; and the wear upon the latter may be made much less than in a belt elevator, because the sand can be delivered to the buckets in the direction of their motion, which can-

not be done with belts. The wheel is hung upon two journals, and when small is driven by a pulley on the shaft. In the case of large wheels, the driving is done either by pinion and gear on the circumference of the wheel, or by a rope passing over a large sheave constructed on the side of the wheel.

In developing the practice at Mill 44 several sand wheels have been used, and one of the later forms (Fig. 498) is here described. It is constructed on the principle of the bicycle wheel, with tension spokes. It has a diameter, outside the buckets, of 51 feet 4¾ inches, and at the inner edges of the buckets a diameter of 47 feet 10 inches. The total width outside the buckets is 11 feet ¼ inch. The shaft, which is hollow, is 30 inches in diameter, turned to 22 inches at the journals. Each journal is 3 feet 4 inches long, and the total length of the shaft is 23 feet 6 inches. The shaft is made in three parts, flanged and bolted together. Each end section carries a hub 7 feet 2 inches in diameter. From each of these, eighteen main bicycle spokes of 3½-inch rod extend radially to support the rim. The distance between the lines of the two sets of spokes, where they intersect the axis of the shaft, is 16 feet and the angle between them is 36°. The middle section of the shaft carries a hub 11 feet 8 inches diameter, with eighteen 1¾-inch tangential spokes to resist circumferential distortion. Half of these spokes are right hand and half left hand. On each side of the rim there are 222 buckets consisting of blades inclined 36° to a line tangent to the circle at the inner edges of the buckets. The blades measure 3 feet 11 inches parallel to the axis of the wheel, and 2 feet 9 inches on the slope; and the distance between centers, measured on the circumference at the inner edges is 8⅛ inches. For driving there are on the outside of the rim 432 gear teeth with 18-inch face and 4.71 inches pitch. The diameter of the wheel on the pitch line is 54 feet, and the diameter of the driving pinion is 4 feet 1½ inches on the pitch line. The wheel is run at 4 revolutions a minute, which gives a velocity of 10 feet a second at the inner edges of the buckets. At this speed, and when delivering the total mill tailings (20,000,000 gallons of water and 2,000 tons of sand in 24 hours) the buckets begin to discharge at a point 20 feet 4 inches above the center of the shaft. If the water were increased to 30,000,000 gallons in 24 hours the discharge would begin 4 inches lower.

Mill 45 has a sand wheel similar to the above in general design, but differing in details. The outside diameter is 32 feet; the diameter at the inner edges of the buckets is 29 feet 4 inches, and the width outside the buckets is 7 feet. The blades measure about 24 inches parallel to the axis of the wheel, and 25 inches on the slope; and the space between them is about 12 inches. Each blade is inclined 38½° to a line tangent to the circle at the inner edges of the buckets. The wheel makes one revolution in 33 seconds, and raises 3,744,000 gallons of water and 444 tons of sand in 24 hours.

At Mill 12 the oversize of the trommel is returned to the rolls by a sand wheel 14 feet in diameter and 11 inches wide. The buckets are 6 inches deep radially, and each blade is inclined 45° from the tangent at the inner circumference. The wheel runs at 20 revolutions a minute.

Tailings wheels are quite largely used at the gold mills of the Rand, in South Africa, some of them of very large size. For example, the Henry Nourse Gold Mining Company has a wheel 60 feet in diameter outside of the buckets.[28] It is constructed on a steel shaft 20 feet long, 14 inches diameter, turned to 12 inches diameter at the journals, each of which is 30 inches long. The spokes, which act in compression, are of 8 × 4-inch timber held together by 1-inch iron tiebolts. There are buckets on only one side. They are lined with American redwood, which is easily renewed when worn. The journal bearings are supported by a pyramidal, trussed steel frame on each side of the wheel. Driv-

ing is done by wire rope passing over a sheave 55 feet in diameter, which is constructed on the side opposite the buckets.

The quantity of material that a wheel will lift, other things being equal, depends upon the length and width of the blades, or in other words upon the cubic capacity of the spaces between the blades. The height to which the contents of a given size of wheel can be lifted depends upon the slope of the blades, and upon the centrifugal force due to the peripheral speed of the wheel. For any fixed height of discharge these two factors are inter-dependent: as the angle between the blades and the tangent to the circle increases, the peripheral speed must increase. To keep the peripheral speed down to a moderate amount the angle of the blades may be diminished. The angle adopted in Mill 44 is 36°, which has proved satisfactory. This slope, independently of centrifugal force, enables the buckets to carry their contents 18 feet 7 inches above the center line of the shaft before they begin to discharge. The centrifugal force increases this distance to 20 feet 4 inches. The centrifugal force increases as the square of the velocity, and therefore the faster the revolution the higher will the buckets go before discharge begins, the quantity of material in the buckets being the same; or with the increased speed, more material may be carried in each bucket without changing the point at which discharge begins.

Assuming the speed of revolution and the inclination of the blades of the wheel in Mill 44 as standard, Table 372, has been made, showing the capacities of wheels of various diameters; the height above the receiving point, at which the buckets begin to discharge; the number and size of the buckets; and the speeds of revolution. To make this table, all the data for the 47 foot 10-inch wheel were taken from Mill 44; further, the dimensions for the buckets of the 4-foot wheel were assumed as shown in the table, and the dimensions for the other wheels were increased in proportion to the increase in diameter. The speed of revolution in each case is such as to give the same centrifugal force as in Mill 44, and hence to raise the material to the same angular height above the center of the shaft. Since the figures are calculated instead of being taken from practice, except in the case of the 47 foot 10-inch wheel, there may be circumstances in connection with the smaller wheels that will make it necessary to depart somewhat from the speeds shown in the table. This can easily be ascertained by trial.

TABLE 372.—SAND WHEELS.

Diameter of Wheel at Inner Edge of Buckets. Ft. In.	Revolutions per Minute.	Velocity per Second at Inner Edge of Buckets. Ft. In.	Numb'r of Buckets on Each Side of the Wheel.	Measure of Each Bucket Around the Inner Circumference. Inches.	Width of Each Bucket on One Side of Wheel Parallel to the Axis. Inches.	Radial Depth of Buckets Inches.	Height of Discharge above Receiving Point, with Corresponding Capacities in Gallons per 24 Hours (including both Sand and Water).			
							Height. Ft. In.	Capacity in Gallons.	Height. Ft. In.	Capacity in Gallons.
4—0	13.81	2—10.7	50	3.02	6.0	4.0	3—8.4	400,346	3—8.1	598,885
6—0	11.27	3— 6.5	70	3.23	8.0	4.7	5—6.6	716,598	5—6.1	1,071,259
8—0	9.76	4— 1.1	87	3.47	9.8	5.5	7—4.8	1,105,666	7—4.1	1,653 964
10—0	8.73	4— 6.7	102	3.70	11.7	6.2	9—3.0	1,560,479	9—2.2	2,334,313
15—0	7.13	5— 7.2	132	4.28	16.3	8.0	13—11	2,964,880	13—9	4,435.160
20—0	6.17	6— 5.6	154	4.90	21.0	9.9	18—6	4,772,285	18—4	7,138,855
30—0	5.04	7—11.0	187	6.05	30.4	13.5	27—9	9,344,273	27—7	13,978,066
40—0	4.37	9— 1.7	209	7.21	39.7	17.2	37—0	15,066,511	36—9	22.537,974
47—10	4.00	10— 0	223	8.12	47.0	20.0	44—3	20,165,400	43—11	30,165,400
60—0	3.56	11— 2.4	236	9.58	58.4	24.5	55—6	29,040,691	55—1	43,441,962

To illustrate how this table may be used, let us suppose that it is required to raise 200,000 gallons of water and tailings in 24 hours to a height of 25 feet. The nearest to this in the table is a 30-foot wheel raising over 9,000,000 gallons in 24 hours to a height of 27 feet 9 inches. The wheel required, therefore,

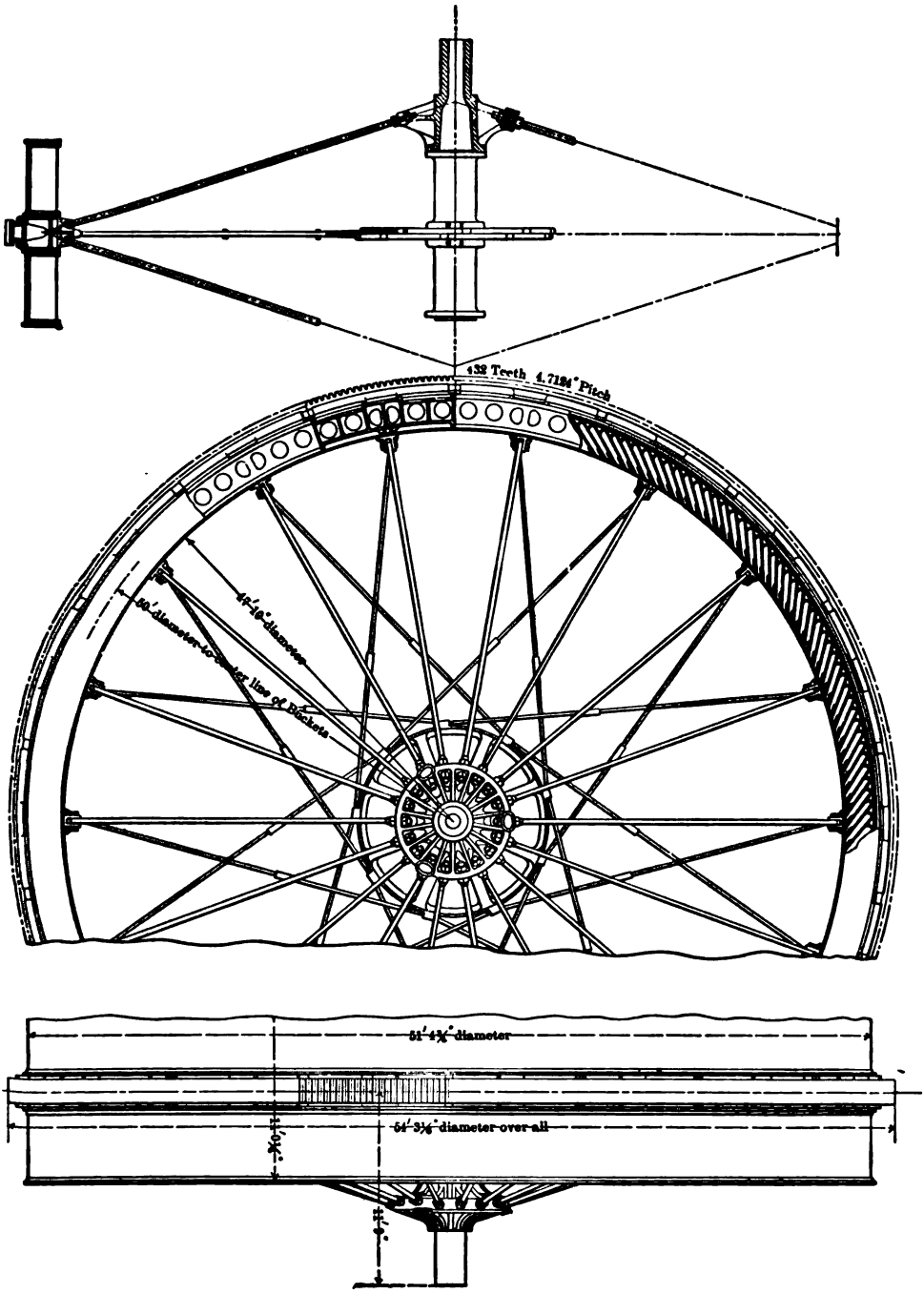

FIG. 498.—CALUMET AND HECLA SAND WHEEL.

could be somewhat smaller than 30 feet inside the buckets; and the number and size of the buckets could be very much reduced. Each of the wheels shown in the table has a set of buckets on each side, each set having the dimensions indicated; but the wheel for the supposed case might be built with buckets on only

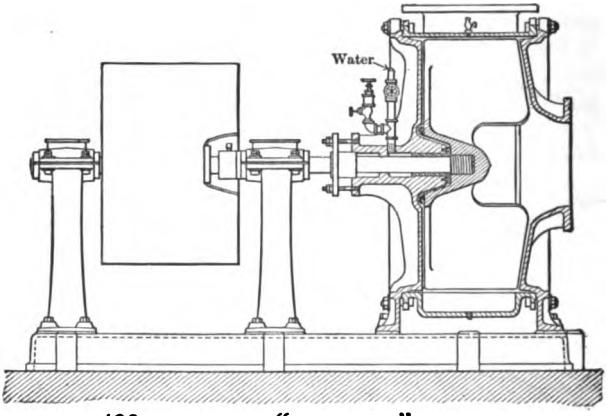

FIG. 499.—SPECIAL "CATARACT" SAND PUMP.

one side. The smaller wheels in the table would naturally be built with only one set of buckets.

§ 630. PUMPS FOR SAND AND WATER.—*Centrifugal Pumps* are more used than any other form for elevating sand and water, because they have no valves or plungers to be injured by the grit. Beside being used in the mills they are also used for dredging.

A centrifugal pump consists of a set of fans or blades carried on a revolving shaft and enclosed in a casing. The material to be elevated enters the casing

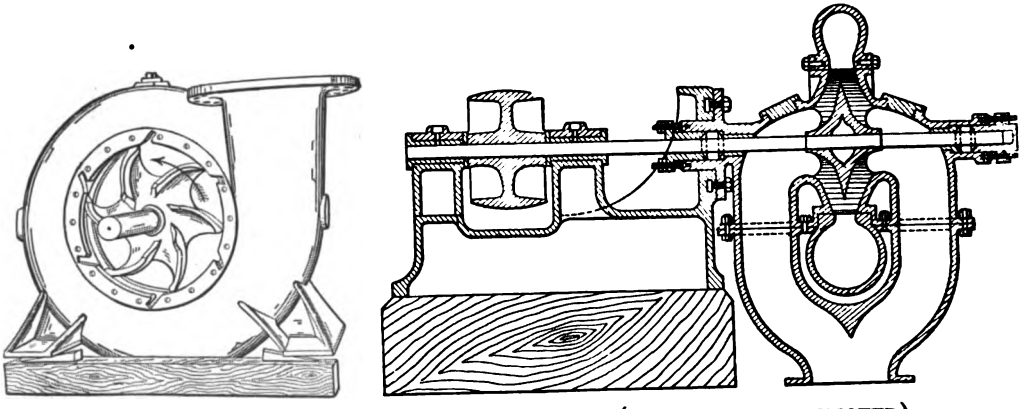

FIG. 500*a*.—LAWRENCE CENTRIFUGAL PUMP (SUCTION PIPE REMOVED).
FIG. 500*b*.—SECTION OF LAWRENCE CENTRIFUGAL PUMP.

centrally around the shaft at one or both sides, is carried to the circumference by centrifugal force, and is there delivered through a discharge opening. These pumps deliver large quantities of material, are very simple in construction, are of low cost, and require but little attention; and having a simple rotary motion they do not require special foundations. From a number of efficiencies of centrifugal and plunger pumps, Webber[28] concludes that the former are the more

efficient for lifts up to about 30 feet; and that the centrifugal pumps intended for considerable lifts have their maximum efficiency at about 17 feet lift.* It should be borne in mind, however, that the efficiency for a given lift varies with the design of the blades and casing, the size of the pump, the speed of revolution, and the speed of delivery. The discussion seems to indicate that the form of blade that will give the best efficiency depends on the height of delivery above the pump, but generally the blade curves backward from the direction of rotation, as shown in Fig. 500*a*. The width of the blade and casing commonly contracts from the center toward the circumference in order to give an approximately uniform speed of current; and for the same purpose the outline of the casing has the form of a spiral, as shown in Fig. 500*a*. Manufacturers recommend definite speeds of revolution for each height of lift with any given pump; and for good work these speeds must be adhered to. To deliver the water with the least friction the delivery pipe must be tangential to the circumference of the casing, but some pumps are still made with radial discharge pipes. The delivery pipe should be of such size that the speed of flow shall not exceed about 12 feet per second.[29] The efficiency decreases at higher speeds.

There are certain differences in design between centrifugal pumps intended for sand and water together, and those intended for water alone. For example, while in the latter the inner width of the casing decreases from the center to the ends of the blades, in the former the width is made uniform in order to prevent choking. When the water carries sand or clay the shaft and bearings may be protected from grit by special construction, and by a feed of clear water through the bearings, as is shown in Fig. 499, taken from the catalogue of Joseph Edwards and Company of New York City. It very commonly happens, however, that pumps designed for water alone are used for sand and water. Sand pumps are often lined with removable steel or chilled iron plates to take the wear.

When suction takes place on each side of the casing, as shown in Fig. 500*b*, taken from the catalogue of the Lawrence Machine Company, of Lawrence, Mass., the end thrust on the shaft is prevented. The sizes of some of the pumps made by this company, with capacities and power, are shown in Table 373. The most common sizes used in the mills are 2 to 3-inch pumps, these designations being the diameters of the discharge pipes.

TABLE 373.—LAWRENCE CENTRIFUGAL PUMPS.

Suction Pipe. Nominal Size. Inches.	Delivery Pipe. Nominal Size. Inches.	Economical Capacity in Gallons of Water per Minute.	Velocity of Water, in Feet per Second.	Horse Power for Each Foot of Lift.
2	1½	70	11.0	0.05
2½	2	100	9.6	0.08
3½	3	250	10.9	0.15
4½	4	450	11.3	0.27
6	6	1,200	13.3	0.65
8	8	2,000	12.8	1.10

The proportion of sand or gravel that can be discharged with water depends on the velocity of the water in the suction and discharge pipes, the size of the particles and their specific gravity. At Mill 25 one pound of ore is raised with every 1.15 gallons of water, so that about 3⅛% of the total volume is ore. The maximum size of the grains is ¼ inch (6.4 mm.). This is the coarsest material for which centrifugal pumps are used in any of the mills in the author's list. Of the 13 mills using such pumps, 8 use them only for slime table pulp (maximum diameter about 0.25 mm.).

The average volume of sand raised by an Andrews dredging pump, with two 6-inch suction pipes and one 9-inch discharge pipe, during seven months' work

* He finds plunger pumps more efficient for lifts greater than about 30 feet.

at the mouth of the St. John's river, Florida, varied from about 76 cubic yards per hour (actual dredging time) in November, 1871, to about 117 cubic yards in February, 1872, with a final average of about 102 cubic yards per hour of actual dredging time. The proportion of sand to the total volume raised was generally 30 to 35%, and seldom exceeded 45%.*

The life of a pump depends on the proportion of sand to water, the quantity and kind of sand, the size and speed of the pump, and the position of the discharge (whether radial or tangential). With the radial discharge, every grain, in being discharged, hits a blow upon the side of the orifice and wears it out rapidly. In Mill 24 both shell and blades wear out in 37 weeks in the pump that delivers the No. 6 jig middlings to the No. 1 whole current classifier. In Mill 25 both shell and blades wear out in 22 weeks in the pump that delivers ¼-inch (6.4-mm.) material from the trommel to the No. 1 jigs. In Mills 46 and 47 chilled cast iron linings wear out in 12 months, and in Mill 48 in 6 months, and are then replaced by new linings.

Ore passing through centrifugal pumps is subjected to a grinding action. This will be much greater in pumps with radial discharge than in those with tangential. Seemann[32] reports the results of four tests on a pump with blades 0.272 m. diameter, running at 15.6 revolutions a second. In each test 120 liters of pulp were taken, both from the feed and from the discharge, and after settling for a day, 1,000 grams of the ore (dry weight) were sifted on a screen with 0.2-mm. openings. The results were as follows:

Sample.	Grains Larger than 0.2 mm.	Grains Smaller than 0.2 mm.	Sample.	Grains Larger than 0.2 mm.	Grains Smaller than 0.2 mm.
	Grams.	Grams.		Grams.	Grams.
1 Feed	145	855	3 Feed	250	750
1 Discharge	63	937	3 Discharge	145	855
2 Feed	78	922	4 Feed	48	952
2 Discharge	17	983	4 Discharge	36	964

It is not stated whether the pump had a tangential or radial discharge; what kind of minerals were present; nor what was the maximum size of ore grains; but the average of the four tests shows that 13.0% of the ore was larger than 0.2 mm. before entering the pump, and half of this quantity, or 6.5% was ground finer than 0.2 mm. by the action of the pump.

Figures on centrifugal pumps used for pulp in the mills are given in Table 374.

TABLE 374.—CENTRIFUGAL PUMPS USED FOR ELEVATING MILL PULP.

Mill No.	Diameter of Suction Pipe. Inches.	Diameter of Discharge Pipe. Inches.	Revolutions per Minute.	Lift. Feet.	Mill No.	Diameter of Suction Pipe. Inches.	Diameter of Discharge Pipe. Inches.	Revolutions per Minute.	Lift. Feet.
6	8	8	.....	.....	45	.....	2	.....	.....
22	.....	2½	1,094	40	46	.....	2	875	.....
24	3½	1¾	605	13	47	.....	2½	582	.....
24	5	2	635	16	48	.....	2	875	12
25	5	4	785	.....	75	.....	.....	.....	10
44	.....	3	.....	.....					

§ 631. *The Spiral Sand Pump,* made by J. H. Frenier & Son, of Rutland, Vermont, consists of a spiral ribbon of steel plate in form like a spiral clock spring (see Fig. 501). On each side is a steel disk, which is joined to the spiral by continuous air tight joints, thus making a spiral tube of steel with a rectangular cross section of constant area throughout. It is mounted on a hollow horizontal shaft, which has an opening to connect with the spiral tube. There are no valves, but the water and sand are raised by virtue of a hydrostatic head in each turn

* Catalogue of Joseph Edwards & Co., taken from U. S. Government Report.

of the spiral, a part of each turn being filled with water and the rest with air (the pump being partly immersed in water and partly in the air). The sum of these hydrostatic heads determines the height to which the water can be forced. This height, therefore, depends simply on the number of turns of the spiral and not, as in a centrifugal pump, on the speed of revolution. The speed, indeed, should be slow, because the loss of power due to friction and to centrifugal force, increases rapidly with the speed. The manufacturers recommend 20 revolutions a minute. The spiral and sides are made of $\frac{3}{16}$-inch steel plate. The pump is so set in the receiving box that the center of the shaft is 7 inches above the surface of the water. At each revolution a certain quantity of water and sand is taken into the outer turn of the spiral, and as revolutions continue is carried to the center and discharged through an opening in the hollow shaft. Connection between this shaft and the discharge pipe is made by means of a nipple, a coupling and a special stuffing ring. The greatest wear takes place between the coupling and the outer end of the nipple, but as both of these are small and easily replaced the cost of repairs is low.

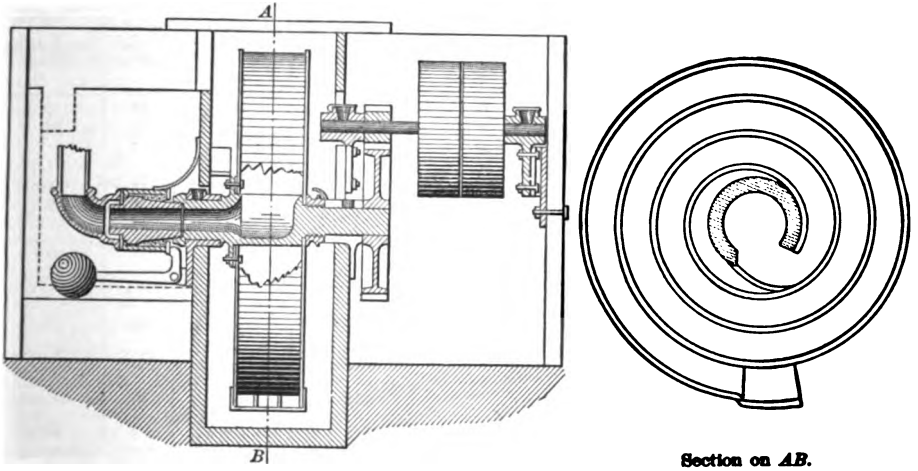

FIG. 501.—SPIRAL SAND PUMP. SCALE $\frac{1}{12}$ SIZE.

The end thrust on the shaft is taken up by a weighted bent lever, acting against the stuffing ring. The radial dimension of the spiral passage is about $2\frac{1}{2}$ inches. The outside width is either 6, 8 or 10 inches, with corresponding capacities of 75,000, of 100,000 and of 150,000 gallons in 24 hours. The diameter is either 44, 48 or 54 inches, with maximum lifts of 14 feet, 19 feet and 25 feet respectively.

Three of these pumps are used, and much liked, in Mill 28, to elevate the spigot products of No. 2 hydraulic classifier and of No. 1 whole current classifier, and the slime table middlings.

§ 632. PUMPS FOR WATER SUPPLY.—For raising water many kinds of pumps are used. For a discussion of these the reader should refer to special treatises on the subject. Table 375 shows the kinds of pumps used in some of the mills and gives some of the details. This table indicates that duplex plunger steam pumps are most common. Belt driven pumps with one, two or three plungers are also used to a considerable extent. Rotary and centrifugal pumps are also used, and one mill uses a pulsometer. The mills that require unusually large quantities of water have vertical pumps with compound steam cylinders. It may be noted, as indicating the magnitude to which ore dressing operations have

attained in special cases, that Mill 44 is supplied with water by one of the largest pumping engines ever built for any purpose. It is a vertical plunger pump, driven by a triple expansion steam engine with a fly wheel. The steam cylinders are respectively 18, 27¾ and 48 inches in diameter, and the stroke is 90 inches. Two differential plungers are used, with lesser diameter of 34 inches, greater diameter of 48 inches, and stroke of 90 inches. The pump ordinarily runs at 20 revolutions a minute, and delivers 40,000,000 gallons of water in 24 hours, raising it about 85 feet. Its maximum capacity is 60,000,000 gallons in 24 hours. It supplies the water not only for Mill 44, but also for another mill of the same size. It was designed by E. D. Leavitt.

For Mills 26 and 67 the quantities of water stated in Table 375 indicate the capacities of the pumps, not the requirements of the mills. For the remaining mills the author does not know whether the figures represent pump capacities or mill requirements. The latter is discussed in § 815.

TABLE 375.—PUMPS FOR WATER SUPPLY.

Mill No.	Kind of Pump.	Gallons Delivered in 24 Hours.	Diameter of Steam Cylinders. Inches.	Diameter of Water Cylinders. Inches.	Stroke. Inches.	Revolutions per Minute.
7	Cameron single plunger		24	14	24	
20	Knowles compound condensing	129,600 to 144,000		10	18	40
25	Centrifugal	2,250,000 by 3 pumps.				
26	Centrifugal					
26	Knowles duplex	1,152,000 to 1,728,000 by 2 pumps.	8	8⅛	12	
27	Geared triple plunger			4	5	40
27	Miller duplex	144,000 to 180,000	10	5	10	
30	Centrifugal					
31	Single plunger			10	10	40
38	Rotary					
40	Rotary	864,000				
43	Rotary	1,728,000				
44	Vertical triple expansion, differential plunger	40,000,000	18, 27¾ & 48	34 and 48	90	20
46	Compound vertical	12,000,000				
47	Compound vertical	12,000,000				
48	Compound vertical	10,000,000				
67	Northey duplex	187,200	5	8	12	
86	Pulsometer					
88	Belt-driven double plunger			8	8	87½

LAUNDERS.

§ 633. Launders are troughs for conveying water, or water and sand, by gravity. They are generally rectangular in section, and made of planed boards or planks. Small sizes are sufficiently strong and water tight when made of three planed boards with the bottom nailed to the two sides. Large launders built of four or more planks require binding frames every few feet to keep the planks in line, and to keep the joints tight. (See Fig. 502.) The planks are sometimes tongued and grooved. To keep the cross-joints tight, they are arranged to come over the supporting frames. Fine silt helps to fill up the joints and make them tight. Linings of wood are often used, being replaced when worn out. Linings made of mild steel plate are sometimes used. The latter cost more at first, but have longer life than wood. Wooden linings, moreover, become very uneven before they are worn out, and therefore they require a steeper slope than is needed with the steel lining, because this unevenness retards the flow. At Mill 44 the main tailings launder is lined with steel plates. The bottom plates are raised along the center of the launder by means of a longitudinal cleat beneath the plates. This causes the sand to run to the sides and so decreases the wear. At Mill 22 the tailings launder is lined with two angle irons (see Fig. 503). Certain sizes of ore in this mill are fed to jigs through V-launders lined with 3-inch angle

irons; and 2-inch iron pipes are used to convey the spigot products of the classifiers to jigs and slime tables. At Mill 20 the wooden tailings launders are lined with plate iron. Old boiler tubes have also been utilized as launders in this mill. When worn on the bottom the tubes are turned to present a new surface. At this same mill chutes having hard usage are sometimes lined on the bottom and sides with old rubber belting, which stands the wear quite well. Where ore falls into a chute or launder it is well to have a pocket in the bottom in which a certain amount of ore will collect and thus save wear.

Switches are sometimes required to turn a stream of pulp or water from one division of a split launder to another. In Fig. 504 the switch swings into place behind the projection *a*, the joint at that point being made tight by cotton waste or a piece of rubber belting. The switch is hinged by two pieces of rubber belting at *b*.

§ 634. In mill work one seeks the kind of launder that will convey a given quantity of water, or water and sand, with the least slope and least loss of mill head. The conditions that favor saving of slope are, therefore, important to every mill man. If the slope is not sufficient the sand will build up on the bottom of the launder, and may finally cause it to overflow its sides. The simplest remedy for this is to increase the slope of the launder. The conditions affecting

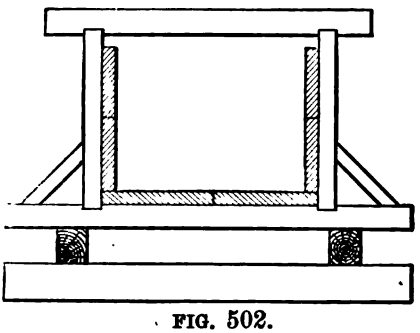

FIG. 502.

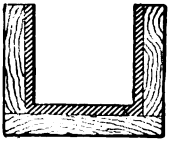

FIG. 503.

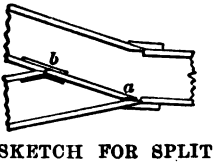

FIG. 504.—SKETCH FOR SPLIT LAUNDER.

the slope may be stated thus: water carrying sand requires greater slope than water alone; coarse sand requires greater slope than fine sand; minerals of high specific gravity require greater slope than those of low; and pulp with a high per cent. of sand requires greater slope than that with a low per cent. At Mill 5, previous to installing the mechanical unwaterer described in § 637, the sand banked badly in the tailings launder at a point where the slope was 0° 43′. The removal of the coarse material by the unwaterer overcame the difficulty. At the old mill of the Atlantic Copper Mining Company, Lake Superior, when it became necessary to extend the tailings launders a considerable distance, on account of the encroachment of the dumping ground upon the harbor, it was found that sufficient slope was not available to carry the coarse tailings to the new dump. To overcome the difficulty, Mr. W. J. Evans kept the coarse and fine tailings separate, and the latter, together with most of the mill water, then ran without difficulty on the available grade to the new dump. The coarse portion could still be sent to the old dump because it formed a steeper deposit when relieved of the fines. This method lengthened the life of the mill site a number of years. The mill was located about 150 feet from, and 25 or 30 feet above, the shore.

S. I. Hallett, of Aspen, Colorado, has found that on gentle slopes the form of launder shown in Fig. 507 will prevent the building up of sand better than the form shown in Fig. 508. The roughness of the boards of which a launder is

built makes a great difference in the speed of the water. Sharp bends also impede the flow greatly.

TABLE 376.—CARKEEK'S SLOPE FOR LAUNDERS.

Size of Ore.	Slopes.		
	Degrees.	Inches per Foot.	
Mine ore to breaker	(a) 36° 35′	8.9	Dry.
2 inches to 1 inch	37° 50′	9.33	Wet.
1 inch to ½ inch	33° 40′	8.	"
½ inch to ¼ inch	29° 5′	6.66	"
¼ inch to ⅛ inch	24° 0′	5.33	"
⅛ inch to ¼ inch	18° 25′	4	"
¼ inch to vanner material	7° 35′	1.6	"
Table or vanner material	6° 20′	1.33	"
Tail race for material ¼ inch in diameter	3° 35′	0.75	"
Tail race for material ⅛ inch in diameter, or larger	6° 20′	1.33	"
Trommel casing for material less than ½ inch	16° 15′	3.5	"
Trommel casing for material larger than ½ inch	33° 40′	8	"

(a) With the slope stated, the ore has to be shoveled from this chute.

So many factors enter into the question of transporting sand in launders that it seems impossible to give exact rules to cover all cases. Where there is but little fall, experiments should be made on the question of slope; and where there is plenty of fall, it is best to be on the safe side by giving the launders plenty

TABLE 377.—MILL LAUNDERS AND CHUTES.

Mill No.	Size of Grains.	Slope.	Width. Inches.	Depth. Inches.	With or Without Water.	Minerals.
Crusher Products.						
27	38 mm. and less....	41°	24	8	With.....	Quartz, porphyry, galena and pyrite.
15	25.4 mm. and less..	20°	10	4	"	Flint and blende.
22	12.7 mm. and less..	15°	5.5	3	Water jet....	Limestone and galena.
27	12.7 mm. and less..	32° 50′	.....	.....	Without.....	Quartz, porphyry, galena and pyrite.
44	4.76 mm. and less.	5° 30′	.....	.....	With	Rhyolite and native copper.
Trommel Products.						
27	38 mm. +.....	60° 10′	14	6	Without.....	Quartz, porphyry, galena and pyrite.
27	16 mm. +.....	27° 45′	5.5	4.5	"	" " " "
27	16 to 12.7 mm.....	33°	4.5	5	"	" " " "
23	12 to 6 mm.....	27° to 50°	4.25	2	"	Limestone and galena.
15	12.3 mm. +.....	30° 30′	8	9	"	Flint and blende.
15	12.3 to 4.7 mm.....	29° 30′	8	5	"	" "
22	12 mm. +.....	37°	8	6	"	Limestone and galena.
22	6 to 3 mm.....	14° 30′ to 38°	(a) 4.25	2	"	" "
25	6 mm. +.....	42° 30′	10	6.5	"	Dolomite and galena.
15	4.7 to 2.3 mm.....	32° 15′	4	2.25	"	Flint and blende.
27	2.8 to 2 mm.....	14° 25′	4	2.5	"	Quartz, porphyry, galena and pyrite.
27	16 mm. to fines.....	33° 30′	8 to 6	6 to 7	With.....	" " " "
27	12.7 mm. to fines.....	11° 30′	6	4	"	" " " "
15	12.3 mm. to fines.....	14° 45′	5	2	"	Flint and blende.
27	10.3 mm. to fines.....	13° 55′	5	4	"	Quartz, porphyry, galena and pyrite.
27	8.3 mm. to fines.....	11° 30′	6	4	"	" " " "
27	4.4 mm. to fines.....	11° 30′	6	4	"	" " " "
27	2.8 mm. to fines.....	11° 30′ to 8°	6 to 4.5	4 to 6	"	" " " "
15	2.3 mm. to fines.....	5° 30′	9.5	5	"	Flint and blende.
Classifier Products.						
25	Overflow No. 1 surface current classifier.	8°	11	5.5	With.....	Dolomite and quartz.
27	2 mm. and less.....	15° 15′	4	4	"	Quartz, porphyry, galena and pyrite.
27	Less than 2 mm.....	8° 15′	4	4	"	" " " "
27	Less than 2 mm.....	7° 30′	4	4	"	" " " "
27	Less than 2 mm.....	3° to 7° 50′	12 to 6	8 to 6	"	" " " "
78	Probably less than 0.5 mm.	1° 35′	2.5	1.5	"	Quartz and pyrite.
22	Spigots No. 1 surface current classifier.	43° to 33°	(b) 2	.....	"	Limestone and galena.

Jig Products.

Mill No.	Size of Grains.	Slope.	Width. Inches.	Depth. Inches.	With or Without Water.	Minerals.
30	25 to 3 mm.	4° 45′	12	10	With	Quartz.
13	19.1 mm. to fines	9° 30′	6	6	"	Quartz and schist.
28	16 mm. to fines	1° 15′	24	48	"	Barite, limestone and quartz.
42	12.7 mm. to fines	3° 35′	8	6	"	Chalcopyrite and chalcocite.
22	12 mm. + to fines	4° 30′	12	6	"	Limestone.
20	6.4 to 1.5 mm.	14°	18	18	"	Quartz and porphyry.
25	6 mm. to fines	8°	14	10.5	"	Dolomite.
25	6 mm. to fines	3°	4.25	3.25	"	Dolomite and galena.
21	4.6 mm. to fines	14°	8	6	"	Quartz and feldspar.
30	3 mm. to fines	4° 45′	12	8	"	Quartz.
20	1.52 mm. to fines	14°	18	12	"	Quartz and porphyry.

Vanner and Slime Table Products.

22		30° 27′ / 21° 12′	(a)2		With	Limestone and galena.
79		14°			"	Pyrite.
22		10° 15′	4.5	4	"	Limestone and galena.
61	0.81 mm. to fines. (c)	7° 10′			"	Quartz.
64	(d)	4° 45′			"	Quartz and pyrite.
27		3° 35′			"	Quartz and porphyry.
27		3° 35′			"	Quartz and porphyry.
80	0.41 mm. to fines	1° 30′	12	(b)6	"	Quartz, calcite and barite.
84	0.41 mm. to fines. (e)	1° 10′			"	Quartz, calcite, barite, copper carbonate, etc.
84	0.76 mm. to fines. (f)	0° 55′	14	11	"	Quartz.

General Tailings.

15	19 mm. to fines	4° 10′	12	10	With	Quartz.
31	18 mm. to fines	7° 10′	12	10	"	Quartz.
34	15 mm. to fines	4° 45′	18	16	"	Quartz.
22	12 + mm. to fines. (g)	4° 30′	12	6	"	Limestone.
33	12 mm. to fines	9° 25′	12	12	"	Quartz.
43	11 mm. + to fines. (h)	4° 45′	12	8	"	Quartz.
42	6.4 mm. to fines	2° 25′			"	Quartz.
44	4.76 mm. to fines. (i)	0° 55′	54	14	"	Rhyolite.
46	4.76 mm. to fines. (k)	2° 25′	30	16	"	Amygdaloid.
47	4.76 mm. to fines. (l)	2° 25′	48		"	Amygdaloid.
48	4.76 mm. to fines. (m)	2° 25′	24	14	"	Rhyolite.
40	3 mm. to fines. (n)	3° 20′	10	8	"	Quartz.
38	2.5 mm. to fines	2° 25′	30	14	"	Quartz.
39	2.5 mm. to fines. (o)	1° 45′	15	12	"	Quartz.

(a) V-launder. (b) Iron pipe. (c) Carries 25,920 gallons (108 tons) of water and 15 tons of sand in 24 hours. (d) Carries 21,600 gallons (90 tons) of water and 15½ tons of sand in 24 hours. (e) Carries 7,200 gallons (30 tons) of water and 12½ tons of sand in 24 hours. (f) Carries 371,520 gallons (1,548 tons) of water and 600 tons of sand in 24 hours. (g) Carries 1,152,000 gallons (4,800 tons) of water and 160 tons of sand in 24 hours. (h) Carries 1,728,000 gallons (7,200 tons) of water and 90 to 95 tons of sand in 24 hours. (i) Carries 20,000,000 gallons (83,360 tons) of water and 2,000 tons of sand in 24 hours. (k) Carries 12,000,000 gallons (50,000 tons) of water and 1,225 tons of sand in 24 hours. (l) Carries 12,000,000 gallons (50,000 tons) of water and 1,660 to 1,850 tons of sand in 24 hours. (m) Carries 10,000,000 gallons (41,700 tons) of water and 1,475 tons of sand in 24 hours. (n) Carries 576,000 gallons (2,400 tons) of water and 144 tons of sand in 24 hours. (o) Carries 3,140,000 gallons (13,000 tons) of water and perhaps 300 tons of sand in 24 hours.

of slope. Table 376 shows the slopes of launders adopted by Mr. John Carkeek, of Butte, Montana, for material that usually passes through coarse concentration works. He states that water must be used in all these cases, except the first. Slopes must not be taken off the launders by introducing boxes between the points of receiving and discharge. If boxes are introduced allowance must be made to still retain the above slopes. Certain ores will run on considerably less pitch, but these figures will be on the safe side for all kinds.

The data on launders collected from the mills is given in Table 377. The depths of the streams are not known. In the foot notes a number of instances are given of the quantity of sand and water flowing in launders of definite size and slope.

It will be noticed that for the crusher products that run with water the slopes increase regularly with the size of the ore. The one instance without water has a much steeper slope than the same size of ore with water. The trommel products running with water, also show a regular increase of slope with the size of ore; but the cases without water show no regularity, though most of them are fairly steep. The two exceptionally gentle slopes (14° 25′ and 14° 30′) are

probably short launders in which the ore forms its own slope. Although the jig products and the general tailings contain much larger particles than the classifier and vanner products, the average slopes (omitting the very steep cases) do not differ very much, the large quantities of water present making the gentle slopes sufficient for even the 15 to 25-mm. particles. The few instances of steeper slopes than is necessary are due to the location of apparatus. Many of the slopes for jigs, classifiers, vanners and general tailings are laid out for economy of fall. The very gentle slope of 0° 55′ for general tailings at Mill 44 was probably intended to be the minimum safe limit.

§ 635. THEORY OF FLOW IN LAUNDERS.—While the author is unable to find exact laws for the size, shape and slope of launders for sand and water, he believes the mill man should have in his possession the main facts about launders for water, which may prove suggestive for designing launders for sand and water. He will, therefore, give first the conditions for water, and then add such facts as are at hand in regard to sand.

For water the conditions may be stated thus: For a launder of any given shape and size, the slope to obtain a given velocity will be less as the surface is made smoother, as the quantity of water increases and as the "wetted perimeter"* is diminished, other things being equal in each case. Since the friction upon the

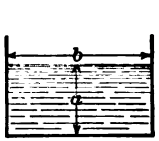

$a:b=1:2$

FIG. 505.

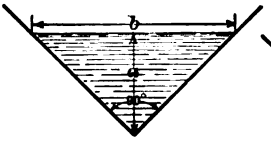

$a:b=1:2$

FIG. 506.

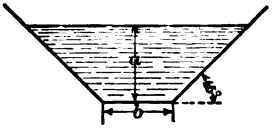

$a:b=1:0.828$

FIG. 507.

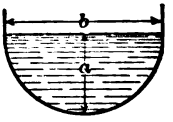

$a:b=1:2$

FIG. 508.

sides and bottom of the launder is the greatest impediment to the flow of water, it follows that the form of launder which gives the least friction will require the least slope for a given flow. That form is the one which has the least "wetted perimeter," and therefore the greatest "hydraulic mean depth"* for a given area. Figures 505-508 show four forms of launders, each with one square foot cross section of stream; the hydraulic mean depths have been calculated for these four and are 0.354 foot, 0.354 foot, 0.370 foot and 0.398 foot respectively. A launder of rectangular section and given slope for a given quantity of water per minute, will give greater velocity if we increase the depth and decrease the width of the stream until the ratio of width to depth becomes 2 to 1. When the depth is made greater and the width less than this, the velocity decreases again. A V-shaped launder with 90° angle has the same hydraulic mean depth as the best rectangular launder, and, therefore, with the same area of section will convey the same quantity of water on the same slope with the same velocity. A trapezoidal launder with sides sloping 45° and the width of the bottom 0.828 of the depth, has a larger hydraulic mean depth than either of the two previous forms and can, therefore, be used on slightly less slope than they. A semicircular launder has the greatest hydraulic mean depth of all and can, therefore, be used with the least slope. The rectangular form has the advantage of being the simplest to construct and keep in repair. It will, therefore, be considered as the standard launder for mill work.

Tables 378 and 379 have been calculated for the convenience of mill men, for water, but not for water and sand. Table 378 shows the mean velocity with which water will flow in rectangular launders made of unplaned plank, and having

* The "wetted perimeter" of a stream is the line of contact between the launder and the cross section of the stream. The "hydraulic mean depth" is the quotient obtained by dividing the area of the cross section of a stream in square feet by its "wetted perimeter" in linear feet.

different dimensions and slopes, and with different depths of stream; and Table 379 shows the quantities of water that will flow in these launders per minute.* Fifty measurements of discharge from launders of unplaned plank (of sizes corresponding to those shown in the tables), quoted by Hering and Trautwine,[34] indicate that these tables probably contain no errors greater than 6%, and that the errors are generally within 3%.

TABLE 378.—MEAN VELOCITIES OF WATER IN RECTANGULAR LAUNDERS OF ROUGH PLANK.

Launders 4 Inches Wide.

Depth of Water. Inches.	Slope in 1 Foot.				
	⅛ Inch.	¼ Inch.	½ Inch.	1 Inch.	2 Inches
	Mean Velocity in Feet per Second.				
½	0.9	1.3	1.9	2.6	3.7
1	1.5	2.1	3.0	4.3	6.1
2	2.1	3.0	4.2	5.9	8.4
3	2.4	3.5	4.9	6.9	9.8
4	2.6	3.7	5.2	7.3	10.4

Launders 8 Inches Wide.

Depth of Water. Inches.	Slope in 1 Foot.				
	⅛ Inch.	¼ Inch.	½ Inch.	1 Inch.	2 Inch's
	Mean Velocity in Feet per Second.				
1	1.7	2.4	3.4	4.8	6.8
2	2.6	3.7	5.2	7.3	10.4
3	3.2	4.5	6.4	9.1	12.8
4	3.6	5.1	7.3	10.3	14.6
6	4.2	5.9	8.4	11.8	16.7
8	4.5	6.3	8.9	12.6	17.8

Launders 12 Inches Wide.

Depth of Water. Inches.	Slope in 1 Foot.				
	⅛ Inch.	¼ Inch.	½ Inch.	1 Inch.	2 Inch's
	Mean Velocity in Feet per Second.				
1	1.9	2.6	3.7	5.2	7.4
2	2.8	4.0	5.6	8.0	11.3
4	4.2	5.9	8.4	11.8	16.7
6	4.9	6.9	9.8	13.9	19.6
9	5.7	8.0	11.3	16.0	22.7
12	6.1	8.6	12.2	17.2	24.4

Launders 16 Inches Wide.

Depth of Water. Inches.	Slope in 1 Foot.				
	⅛ Inch.	¼ Inch.	½ Inch.	1 Inch.	2 Inch's
	Mean Velocity in Feet per Second.				
1	1.9	2.7	3.8	5.3	7.5
2	3.1	4.4	6.2	8.8	12.4
4	4.5	6.3	8.9	12.6	17.8
8	6.1	8.6	12.2	17.2	24.4
12	6.9	9.7	13.8	19.4	27.5
16	7.5	10.6	15.0	21.3	30.1

Launders 32 Inches Wide.

Depth of Water. Inches.	Slope in 1 Foot.				
	⅛ Inch.	¼ Inch.	½ Inch.	1 Inch.	2 Inch's
	Mean Velocity in Feet per Second.				
1	2.0	2.8	3.9	5.6	7.9
2	3.3	4.6	6.5	9.2	13.0
4	5.2	7.4	10.4	14.7	20.8
8	7.5	10.6	15.0	21.3	30.1

Launders 32 Inches Wide.

Depth of Water. Inches.	Slope in 1 Foot.				
	⅛ Inch.	¼ Inch.	½ Inch.	1 Inch.	2 Inch's
	Mean Velocity in Feet per Second.				
16	10.0	14.2	20.1	28.4	40.2
24	11.2	15.8	22.3	31.6	44.7
32	12.1	17.1	24.2	34.2	48.4

These tables forcibly illustrate the advantage of having the stream twice as wide as it is deep, where water alone is flowing. For example, a stream 8 inches wide and 4 inches deep will flow about 85% faster than a stream 32 inches wide and 1 inch deep (both having the same slope), though the area of the cross section is the same in each case. For equal speeds of current the former requires only 29% as much slope as the latter. These tables also show the effect that an increase of water has upon the slope. For example, a launder 8 inches wide, with a stream 1 inch deep requires more than twice as much slope as when the stream is 2 inches deep, in order to have the same velocity.

The influence that the roughness of the surface has upon the slope is very marked. Tables 378 and 379 were calculated for sawed, unplaned planks; but if planed planks are used the same velocity of current will be obtained with only 58 to 67% of the slope shown in any case in the tables, the advantage being a

* These tables are calculated by the formulas: $v = c\sqrt{rs}$ and $q = av$, in which v = mean velocity in feet per second; q = volume in cubic feet per second; a = area of cross section of stream in square feet; r = hydraulic mean depth in feet; s = slope expressed as the sine of the angle; c = a coefficient, depending on the hydraulic mean depth, the roughness of the launder and the slope. For a given hydraulic mean depth the different slopes shown in the tables have practically the same coefficient.

little greater when the hydraulic mean depth is large than when it is small. Ordinary cast iron linings require about the same slope as unplaned planks.

TABLE 379.—QUANTITIES OF WATER FLOWING IN RECTANGULAR LAUNDERS OF ROUGH PLANK.

Launders 4 Inches Wide.

Depth of Water. Inches.	Slope in 1 Foot.				
	⅛ Inch.	¼ Inch.	½ Inch.	1 Inch.	2 Inch's
	Gallons per Minute.				
⅛	5.8	8.2	11.7	16.5	23.3
1	18.9	26.3	37.8	53.5	75.7
2	52.4	74.2	105	148	210
3	91.6	130	183	259	366
4	129	183	259	366	517

Launders 8 Inches Wide.

Depth of Water. Inches.	Slope in 1 Foot.				
	⅛ Inch.	¼ Inch.	½ Inch.	1 Inch.	2 Inch's
	Gallons per Minute.				
1	42.1	59.5	84.2	119	168
2	129.	189	259	366	517
3	240.	339	479	676	958
4	363.	513	726	1,027	1,452
6	625.	884	1,250	1,767	2,500
8	890.	1,258	1,779	2,516	3,558

Launders 12 Inches Wide.

Depth of Water. Inches.	Slope in 1 Foot.				
	⅛ Inch.	¼ Inch.	½ Inch.	1 Inch.	2 Inch's
	Gallons per Minute.				
1	69.3	98	139	196	277
2	211	298	422	597	844
4	625	884	1,250	1,767	2,500
6	1,099	1,554	2,198	3,108	4,396
9	1,908	2,698	3,816	5,395	7,631
12	2,736	3,868	5,471	7,736	10,943

Launders 16 Inches Wide.

Depth of Water. Inches.	Slope in 1 Foot.				
	⅛ Inch.	¼ Inch.	½ Inch.	1 Inch.	2 Inch's
	Gallons per Minute.				
1	94	133	188	266	376
2	309	437	617	873	1,235
4	890	1,258	1,779	2,516	3,559
8	2,432	3,438	4,863	6,877	9,727
12	4,116	5,820	8,232	11,640	16,464
16	6,000	8,485	12,001	16,969	24,002

Launders 32 Inches Wide.

Depth of Water. Inches.	Slope in 1 Foot.				
	⅛ Inch.	¼ Inch.	½ Inch.	1 Inch.	2 Inch's
	Gallons per Minute.				
1	196	278	393	556	786
2	650	919	1,301	1,839	2,601
4	2,075	2,933	4,149	5,867	8,298
8	6,000	8,485	12,001	16,969	24,002

Launders 32 Inches Wide.

Depth of Water. Inches.	Slope in 1 Foot.				
	⅛ Inch.	¼ Inch.	½ Inch.	1 Inch.	2 Inch's
	Gallons per Minute.				
16	16,023	23,657	32,046	45,313	64,092
24	26,751	37,826	53,503	75,653	107,005
32	38,590	54,565	77,179	109,131	154,358

§ 636. In regard to the transportation of sand by the water current, experimental figures from Dubuat[33] are quoted in Table 380. They show the bottom velocities of currents in wooden launders of (planed?) plank, necessary to move various sizes of grains of certain specific gravities.

TABLE 380.—SPEED OF WATER CURRENT NECESSARY TO MOVE DIFFERENT SIZES OF SAND AND PEBBLES.

Material.	Velocities at Bottom of Stream, in Feet per Second.	
	Slowest Observed Velocity that Moved the Grains.	Fastest Observed Velocity that did Not Move the Grains.
Brown clay (specific gravity 2.64)	0.36	0.27
Fine sand (Sp. Gr. 2.64 ?)	0.69	0.53
Coarse sand (Sp. Gr. 3.36)	1.07	0.71
Gravel, size of anise seed (Sp. Gr. 2.545)	0.53	0.36
Gravel, size of peas or larger (Sp. Gr. 2.545)	0.71	0.69
Gravel, size of common beans (Sp. Gr. 2.545)	1.55	1.07
Beach pebbles, one inch or more in diameter (Sp. Gr. 2.614)	3.20	2.13
Angular weathered flint, about the size of a hen's egg (Sp. G. 2.25)	4.00	3.20

Nearly all of the mill launders transporting sand and water are of such size that the streams are shallow and wide compared with the best proportion for water, stated above. This may be wise; but perhaps if narrower, deeper streams

were used, slope might be saved. In order to treat this subject better, the author needs facts from the mills in regard to the size of grains, specific gravity of the minerals, quantity of sand and water transported, and the width, depth and slope of the stream.

Unwaterers and Driers.

§ 637. Unwatering Devices are used to diminish the water carried by sand, or the sand carried by water. The sand, if of value, is thereby put in better condition for the next step in the process; if it is waste, it is in condition to be dumped or loaded while the water may be in condition to be used again. These devices may be classified as boxes, screens, and mechanical unwaterers. Unwatering boxes are discussed in § 340.

Unwatering Screens.—In Mill 38 the coarse concentrates (from No. 1 and No. 2 jigs), which are collected separately from the rest of the concentrates, are unwatered by passing over a screen placed in the launder that leads to the collecting bin. In Mill 40, jig middlings, ranging in diameter from 7 mm. to less than 2½ mm. go to a trommel with 2½-mm. round holes. The oversize of this trommel goes to middlings rolls, while the water, together with the finest sand, goes to an unwatering box. The screens used to unwater jig tailings in Mills 27 and 86 are described in § 443.

In Mill 5 the concentrates from each log washer are unwatered by passing first

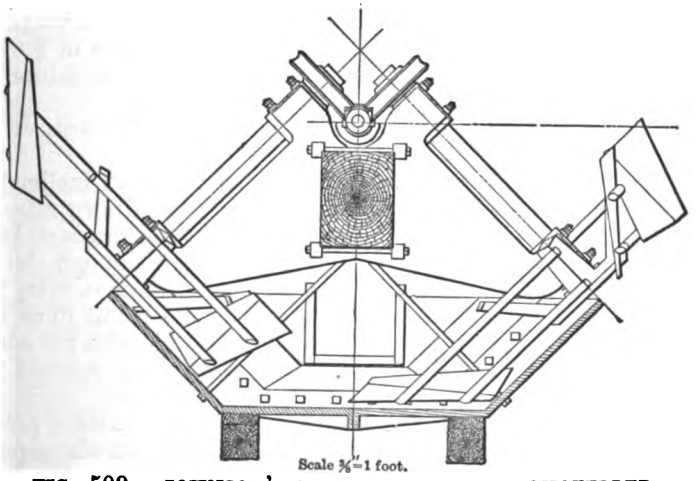

FIG. 509.—JOHNSON'S MECHANICAL SAND SHOVELLER.

to a trommel with 4.8-mm. round holes, from which the water and fines pass to a fixed flat screen of 14-mesh wire cloth sloping 35°. The reason for the two screens is that the size of grains ranges from 50.8 mm. in diameter to fines.

In Mill 76 the pulp from the clean-up barrel, after passing over amalgamated plates, goes to a tank with a burlap filter in the bottom. The water goes to waste, and what is caught on the filter is sent to the chlorination works.

Mechanical Unwatering.—The Johnson Mechanical Sand Shoveller is used at Mill 5 to remove the sand from the waste launder, in order to prevent the settling ponds filling up too rapidly; and also to save fall, because the sand requires more slope in the launder than the clay. The apparatus, of which Fig. 509 is an end elevation, consists of a series of scoops attached to each of two revolving shafts. The form and inclination of the scoops is such that their operation is much like

that of a shovel in a man's hands. Each scoop dips to the bottom of the launder, and as it rises turns partially so as to gradually pour off the water (the water also draining through perforations in the scoop), and finally discharges the sand outside the launder into a car. For the details of construction the reader is referred to the Transactions of the Am. Inst. Min. Eng., Vol. XXVIII., page 225. The machine takes out about twice as much sand in a given time as three men were previously able to take out; in fact, it appears to remove all of the sand, and let only the clay and fine silt pass on.

A slime table with very gentle slope and slow speed of rotation is suggested as an unwaterer for slime. Some form of scraper would probably be needed to remove the settled slime. The use of this plan is unknown to the author. The nearest approach to it is the method used for settling in some starch works: water carrying starch and gluten is passed over tables about 2 feet wide and 100 or more feet long, having a slope of perhaps 1½ inches in 100 feet (0° 4′+). The starch quite readily settles on the table, while the gluten, being much lighter, is carried along. When the former has deposited to a depth of 5 or 6 inches the current is stopped and the starch removed with hoes.

§ 638. DRIERS.—Ore or concentrates have to be dried for dry crushing and screening, for magnetic concentration, and to save freight charges in shipping. Since coarse material retains much less moisture, after draining, than fine material, it is often sufficient to simply drain the coarse concentrates before shipping, though the fine concentrates may require drying. For example, in Mills 27 and 29 concentrates finer than 0.9 mm. and 2.5 mm. diameter respectively, are dried before shipping, while the coarser sizes are shipped without drying. The percentage of moisture retained by different sizes of ore is shown in § 819. When fine ore is to be shipped it is advisable to leave 2 or 3% of moisture to prevent loss of dust.

Drying is done either in revolving cylinders, in shaft furnaces or on drying floors.

In Mill 27 a *Cummer Drier* is used. This consists of an inclined revolving cylinder, through which the hot gases from a furnace are drawn after they have passed beneath the cylinder. The drying is assisted by internal longitudinal blades which lift the concentrates and allow them to fall through the current of hot gases. A positive draft is maintained by means of a suction fan. This drier at Mill 27 treats concentrates of 0.9 mm. diameter and finer at the rate of 10 tons in 7 hours, using 975 pounds of coal, which includes the coal required to heat the drier after 14 hours' idleness. The moisture is reduced from 23% to 3%.

In Mill 92 the jig concentrates are dried in a revolving cylinder provided with internal longitudinal lifting blades. Mill 89 uses a revolving plate-iron cylinder, lined with brick, to dry the ore from the breaker (about 2 inches maximum diameter). This cylinder has an outside diameter of 6 feet, is 24 feet long, slopes 4 inches per foot, and makes 7 revolutions a minute. It handles 125 tons in 10 hours, and could handle more. The percentage of moisture is not stated. Oil is used for fuel, and the amount is ½ gallon per ton of ore dried.

In Mill 29 there is a slightly conical revolving drier, 18 feet long, with diameters of 36 inches at the small end and 44 inches at the large end, and revolving 37 times a minute. The hot gases from the fire pass through the cylinder in one direction while the ore passes in the opposite direction.

In Mill 94 the ore, after being broken to ¾ inch (19.1 mm.) and less, was dried in an *Argall four-cylinder drier* previous to fine crushing and screening. This drier differs from the common cylindrical form in having a nest of four comparatively small, brick-lined cylinders (about 18 inches inside diameter) instead of one large cylinder. The nest is fastened inside of two heavy track bands,

which are supported and driven by two pairs of supporting rollers. The hot gases from the fire pass through the pipes in the opposite direction from the ore. This design is claimed to better utilize the heat of the gases from the fire. At this mill the moisture was reduced from 10% to 1% in 70 tons of ore in 24 hours, using one ton of coal. The drier sloped 1½ inches per foot (7° 5′), and

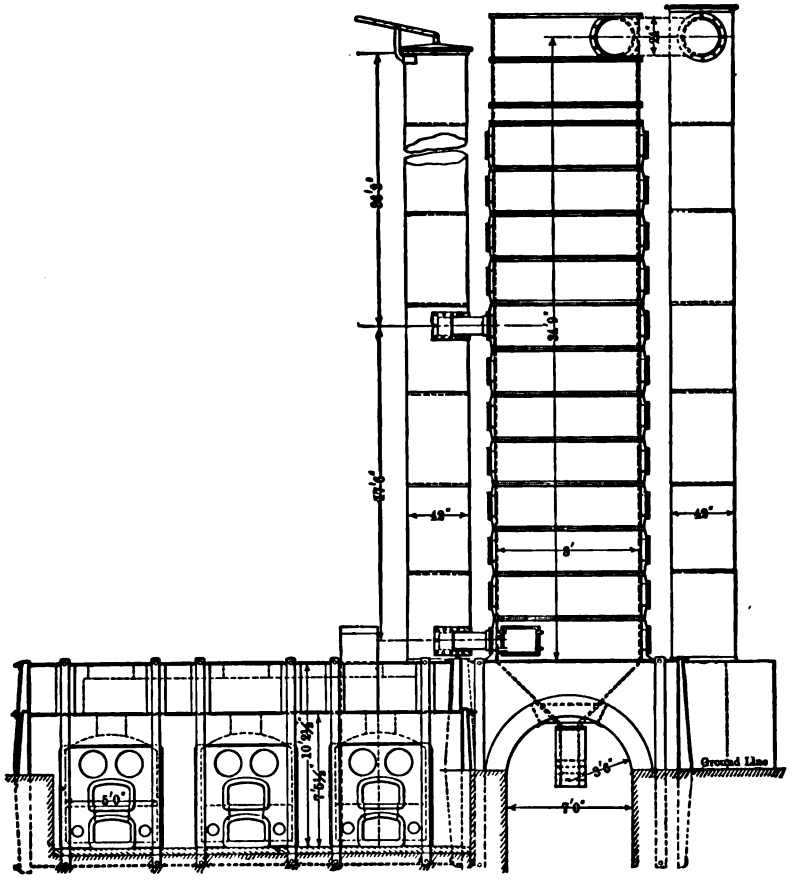

FIG. 510*a*.—EDISON DRIER.

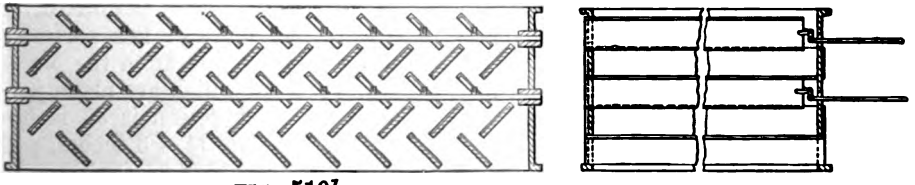

FIG. 510*b*.—DETAILS OF EDISON DRIER.

made two revolutions per minute. It was at first run at half the above inclination, and twice the above speed, but these latter adjustments caused excessive wear on the tracks.

At Mill 91 *Edison's Drying Kiln* is used to dry the ore after it has been crushed to about ½ inch (12.7 mm.) maximum diameter. It consists of a tower 8 feet square and 50 feet high in sections made of iron plates. (Figs. 510*a* and 510*b*

show the furnace differing slightly, but only in unimportant details, from the one here described.) The ore first passes over a set of screens to remove roots or other foreign matter; and then to the distributor (Fig. 493), which spreads it uniformly. The falling ore then meets a system of baffle plates (Fig 510*b*), which extend between two sides of the tower. The plates on each level are parallel, but slope at right angles to those on the next level. The ends of these plates rest in slots in the sides of the tower, and can thus be easily removed. The plates are 8½ inches wide, ½ inch thick, and slope 45° in the direction of the width. The least distance between the edges of any two plates is about four times the diameter of the largest particle of ore. If the ore contains more than 17% moisture it sticks to the upper baffle plates, and to take care of such ore two of the upper rows of plates are provided with levers with which they may be shaken longitudinally (see Fig. 510*b*). After the ore has passed over these upper plates it is dry enough, superficially, to prevent sticking. The hot gases for drying are introduced at three different levels through three sets of brick checkerwork in one side of the tower, the baffle plates being omitted from the sections where the hot gases enter. The gases are drawn off from the top by a suction fan which delivers to a dust catcher. The drier treats 300 tons of ore per hour, using 1,400 pounds of anthracite coal in that time. The ore passes through the drier so rapidly that the moisture is not all carried off, but so much heat is retained that there is no difficulty in removing nearly all the remaining moisture by dry air blown through the stock house at the rate of 50,000 cubic feet per minute.

A second drier of the same kind, but 6 feet square instead of 8 feet, is used to remove the last traces of moisture, and to prepare the ore for the dusting chamber (§ 600) after it has been crushed to a maximum diameter of about 0.06 inch (1.5 mm.), and has been partially concentrated by the No. 1 or 12-inch magnets.

One of these driers, 3 feet square and 24 feet high, has been installed in Mill 92, to replace another form, for drying all of the ore after it has been reduced to a maximum diameter of about 1½ inch (38.1 mm.).

In Mill 28 there are two drying floors, each 25 feet long and 12½ feet wide, upon which are laid six 4-inch steam pipes, three conveying steam forward and three pipes returning it to the exhaust. The concentrates from 40 mm. to 2 mm. in diameter are dried on one of the floors, and all finer than 2 mm. on the other.

Miscellaneous Apparatus.

§ 639. Removal of Pick-points, Bolts, Sticks, etc.—To prevent strains upon crushing rolls and to prevent clogging of the different machines, coarse screens are sometimes used to remove pick-points, sticks, etc., from the ore, after it has been through the breaker. These things are also more or less perfectly removed by hand picking. In Mill 91, for this purpose, the ore from the No. 3 corrugated rolls, is passed over a set of three No. 1 screens which are plane perforated plate screens, just before entering the drier. Each screen is 36 inches long, 38 inches wide, and slopes 40°. The upper one has slots 1½ × 3 inches, and 3 inches apart. The middle and lower screens have slots 1¼ × 2½ inches, and ⅝ inch apart. The undersize of the first goes to the second, of the second to the third screen, and of the third to the drier. The oversize of all three screens is thrown out.

In Mill 94, pick-points, bolts, etc., are removed from the ore before going to the No. 1 rolls, by means of 1-inch round holes on the last 2 feet of No. 1 trommel, the first 4 feet of which are covered with 4-mesh wire cloth. The undersize of the 1-inch hole goes to rolls for further crushing, while its over-

size contains the pick points, etc. The material through 4 mesh on 5 mesh, from No. 2 trommel, is mainly chips, strings, etc., and goes to waste.

In Mill 92 the ore, after being reduced to a maximum of about 8 mesh, goes to 10-mesh trommels, the oversize of which goes to a 1-mesh trommel, and the oversize of the latter is sticks, nails, etc.

DUST-FANS AND CHAMBERS.—When ore is treated dry, as in sampling mills, pneumatic mills and magnetic concentrators, there may be so much floating dust that suction fans are needed to remove it. Fans are also used in some cases to hasten drying, as in Mills 27 and 91. In Mill 89 two suction fans are used, one to remove dust from the magnetic machines, and the other to remove dust from the crushing machinery and trommels. In Mill 94 there is a suction fan connected with the housings of all rolls, elevators and trommels. The heavier part of the dust settles in a dust chamber.

The centrifugal dust collector commonly used in wood working mills and flour mills may prove valuable in some cases. Where the dust carries much value, or where it is especially necessary to prevent it from blowing into the air, a bag room is a simple and efficient means of catching it.[36 and 38] This consists of a room in which a large number of burlap or cotton cloth bags or tubes are suspended vertically. There are two methods of operation. In one, the air and dust come through the large horizontal distributing pipes in the top of the room, and pass down through nipples into the bags, the lower ends of which lie on the floor. The air can pass through the meshes of the bags while the dust cannot. The latter falls or is shaken down at intervals, and is periodically emptied into wheelbarrows. In the other method, the air and dust are carried into a chamber with hoppers in the bottom, and pass up into the bags through nipples in the top of the chamber. The dust is shaken down into the hoppers, from which it is drawn off through gates. Sturtevant claims that, for ore, burlap is a better material than cotton: 1st, because the holes are not so easily clogged by the dust; and 2nd, because, when the blast is stopped, the collapse of the bags causes a large part of the adhering dust to fall down, while with cotton the bags must be shaken to remove the dust.

WEIGHING ORE.—Platform scales may be provided upon which the cars or wagons bringing ore, or removing concentrates, are run to be weighed. At Mill 86 the concentrates are weighed as they are being wheeled in barrows to the cars. It is a common custom to weigh a number of cars of ore, and use the average weight for making up daily accounts of tonnage. This method may be accurate enough to indicate irregularities in the work of the mill, but it is not accurate enough to base financial transactions upon. For that purpose careful weighing, moisture samples and assays are all required.

Care should be used that heavier loads are not put on the scales than the latter are intended to weigh; and the scales should be tested occasionally to see that they are accurate. It will be suggestive to mention a case where the scales were frequently tested and were supposed to be accurate; but the test weights were found to be so much in error that a mistake of about 40 pounds per ton had been made. The idea has been suggested that disputes may arise in case of shipment on account of differences in weight between places of high and of low altitude; but it should be stated that this difference occurs only with spring balances, which, of course, are never used in dealing with ore. With a spring balance the difference is only about two pounds per ton between sea level and a height of 10,000 feet in the same latitude; and if the places are as far apart in latitude as British Columbia and the Gulf of Mexico the difference is about 7½ pounds per ton. In this book a ton always means 2,000 pounds unless otherwise indicated. The long ton contains 2,240, the so-called "miner's ton" 2,352, and the metric ton 2,204 pounds.

Bibliography of Accessory Apparatus.

SAMPLING.

1. *Am. Chem. Soc.*, Vol. XV., (1893), p. 260. Shimer and Reifsnyder show, by experiment, the advantage of having ore somewhat moist for sampling.
2. *Am. Inst. Min. Eng.*, Vol. XX. (1891), p. 155. Wm. Glenn discusses the need of careful, unprejudiced sampling, and describes hand sampling by channelling. Discussion by R. W. Raymond, with description of Cornish quartering.
3. *Ibid.*, p. 416. H. L. Bridgman discusses sampling and describes the Bridgman mechanical samplers. Illustrated.
4. *Ibid.*, Vol. XXV., (1895), p. 826. D. W. Brunton discusses the theory of sampling; and by using certain experimental data, deduces a formula showing the relation between the weight of a sample and the maximum size of the ore grains.
5. *Ibid.*, Vol. XXVI., (1896), p. 1098. Henry A. Vezin discusses the advantages of a good mechanical sampler compared with hand sampling.
6. *Can. Min. Rev.*, Vol. XVII., (1898), p. 43. F. T. Snyder. A simple automatic sampler. Illustrated.
7. *Chem. and Met. Soc. S. Africa*, Vol. II., (1898), No. 8, p. 155. S. H. Pearce discusses sampling of various products and describes an automatic sampler for tailings. Illustrated.
8. Collins, H. F., (1899), "Metal. of Lead," p. 2. Description and discussion of Clarkson sampler. Illustrated.
9. *Eng. & Min. Jour.*, Vol. LI., (1891), p. 718. The disadvantages of systematic hand sampling.
10. *Ibid.*, Vol. LII., (1891), p. 264. A. D. Hodges, Jr. Necessary precautions in hand sampling.
11. *Ibid.*, Vol. LIII., (1892), pp. 111 and 132. Paul Johnson gives details of Cornish sampling at the El Paso smelter.
12. *Ibid.*, Vol. LXI., (1896), p. 543. Bridgman's assay office sampler. Illustrated.
13. *Ibid.*, Vol. LXIII., (1897), p. 160. W. W. Taylor. Sampling a pile of ore by driving in an iron pipe at various places.
14. Hofman, H. O., "Metallurgy Lead," (1899), p. 42. Discussion of sampling with descriptions of hand sampling and several mechanical samplers. Illustrated.
15. *Iron & Steel Inst.*, Vol. XLIV., (1893), p. 131. Thomas Clarkson. Principles of sampling, and description of the Clarkson sampler. Illustrated. Discussion.
16. *Mines & Minerals*, Vol. XX., (1899-1900), p. 391. Same as *Chem. & Met. Soc. S Africa*, Vol. II, p. 155.
17. *Sch. Mines Quart.*, Vol. III., (1881-2), p. 253; and VI., (1884-5), p. 351. S. A. Reed discusses the theory and practice of sampling.

FEEDERS AND DISTRIBUTORS.

18. *Eng. & Min. Jour.*, Vol. LIV., (1892), p. 5. John W. Meier. Descriptions of automatic feeders used at Przibram. Illustrated.
19. *Zeit. Berg. Hütt. u. Salinenwesen*, Vol. XLIII., (1895), p. 215. Description of the Musterschutz slime feeder. Illustrated.

ELEVATORS AND CONVEYORS.

20. *Am. Inst. Min. Eng.*, Vol. XII., (1883-4), p. 499. S. Stutz. Link belt elevators and conveyors. Illustrated.
21. *Ibid.*, Vol. XXVI., (1896), p. 78. Thomas Robins, Jr., discusses conveying by belts and describes his special belt, rollers, etc.
22. *Berg. u. Hütt. Zeit.*, Vol. LV., (1896), p. 397. Short description and data in regard to the Kreiss jerking conveyor.
23. *Eng. & Min. Jour.*, Vol. LXVII., (1899), p. 236. Details of a 60-foot sand wheel for the Henry Nourse Gold Mining Co., S. Africa. Illustrated.
24. *Min. Ind.*, Vol. V., (1896), p. 264. John E. Rothwell discusses details of belt elevators.
25. Rittinger, P. R. von, (1867), "Aufbereitungskunde," p. 497. Elevators, sand wheels and conveyors. Illustrated.
26. *S. Afric. Assoc. Eng. & Architects*, Vol. IV., (1897-98), p. 53. H. R. Skinner. Some details and costs of tailings wheels on the Rand, and comparisons with pumps and bucket elevators.

PUMPS.

27. *Am. Eng. & R. R. Jour.*, Vol. LXVIII., (1894), p. 411. John Richards. Discussion of the details of centrifugal pumps.

28. *Am. Soc. Mech. Eng.*, Vol. VII., (1885-6), p. 608. W. O. Webber. Efficiencies of centrifugal and reciprocating pumps.
29. *Ibid.*, Vol. IX., (1887-8), p. 228. W. O. Webber and others discuss the construction and efficiency of centrifugal pumps.
30. *Berg. u. Hütt. Zeit.*, Vol. XXXII., (1873), p. 283. Short illustrated description of a special plunger pump for sand and water.
31. *Eng. & Min. Jour.*, Vol. LXV., (1898), p. 553. Illustrated description of Frenier and Leblanc spiral sand pump.
32. *Freiberger Jahrb.*, (1893), p. 83. Seemann gives figures showing the grinding effect of a centrifugal pump on sand.

LAUNDERS.

33. Dubuat, (1816), "Principe d'Hydraulique et de Pyrodynamique," Vol. II., pp. 77-90. Bottom, top and mean velocities of flow of water in small wooden channels. pp. 91-97. Bottom currents required to move different kinds of sand, gravel and clay.
34. Hering and Trautwine, (1889). Translated from Ganguillet and Kutter, with additions), "A General Formula for the Flow of water," p. 131. A large number of gaugings of the flow of water in pipes and open channels of various dimensions.

MISCELLANEOUS.

35. *Am. Inst. Min. Eng.*, Vol. XXVIII., (1898), p. 225, J. E. Johnson, Jr. An automatic shoveller for removing sand from water running in launders.
36. Hofman, H. O., (1899), "Metallurgy Lead," p. 131. Description of Lewis and Bartlett bag process for collecting dust and fumes. p. 378. Discussion of various methods of condensing flue dusts, with descriptions of different forms of dust chambers. Illustrated.
37. Peters, E. D., Jr., (1895), "Copper Smelting," p. 475. Short discussion of dust chambers.
38. Schnabel, Carl, (1896), "Handbuch der Metallhüttenkunde," Vol. II., p. 240. Also Louis' translation, (1898), Vol. II., p. 228). Description of bag rooms for collecting zinc white. Illustrated.

PART IV.

MILL PROCESSES AND MANAGEMENT.

PART IV.

MILL PROCESSES AND MANAGEMENT.

Having discussed, individually, the various kinds of apparatus which find application in concentrating mills, there remains the consideration of the mills as a whole, including the various combinations of principles; the different arrangements of apparatus; the management of mills; general items such as power, water, costs, etc.; mill testing and the selection of processes suitable for different ores.

CHAPTER XX.

SUMMARY OF PRINCIPLES AND OUTLINES OF MILLS.

§ 640. SUMMARY OF PRINCIPLES.—For the convenience of the student of milling a résumé is here given of the different principles employed in separating minerals. The mode of combining these principles will be found in the mill schemes which follow later.

Hand Picking.—The eye and hand are guided in selecting the good ore from the waste, the waste from the good ore, or one valuable mineral from another by the color, lustre, aggregation, fracture, and specific gravity of the minerals.

Sizing by Screens puts together in groups particles which are of about the same size irrespective of specific gravity. The variation of size ranges from the largest grain that could come through the screen above to the smallest grain that could rest on the screen below. The trommels or drum screens and the flat screens, whether shaken or fixed, are included in this class.

Sizing by a Water Film on a Surface puts together particles which are about the same size. The specific gravity of the minerals probably affects this operation to a limited degree. For example the finer grains of quartz in any given product roll more easily than the grains of galena of the same size. The slime table, canvas table, blanket table, and buddle are all included in this class.

Sorting by Free Settling is done by classifiers of all kinds. It puts together in any given product particles that are equal settling under free settling conditions, in which the particle of mineral of higher specific gravity is of smaller diameter than that of lower specific gravity.

Elutriation is done by stirring up the mixed grains in a vat or tank. After a period of settling the coarser grains, the supernatant water containing the lighter grains is drawn off. The operation is free settling applied to very fine particles. The washing of clays is virtually elutriation, but it is generally continuous as far as the removal of the fine stuff from the coarse is concerned, intermittent only in the settling of the fine clay.

§ 641. *Sorting by Hindered Settling* is done on the beds of jigs during pulsion or forward stroke of the plunger. It causes the particles to become layered or stratified and brings together, in any layer, grains that are equal settling under hindered settling conditions. Here again the grain of higher specific gravity which is brought into equilibrium with one of lower specific gravity is smaller in diameter than the latter, but the difference in diameters is considerably greater than with free settling.

Suction takes place on the beds of jigs during the return stroke of the plunger. By it any grains of high specific gravity that are small enough to do so are drawn down through the interstices of the bed into the hutch below.

Sorting by Settling in Air.—This action takes place on the bed of a pneumatic jig during the pulsion or forward motion of the plunger. It puts together grains that are equal settling in air. The effect may not be dissimilar to hindered settling in water. No extensive investigation to settle this point is known to the author.

Momentum and Trajectory.—When particles are thrown with equal velocity in a horizontal direction they hold their momentum for different lengths of

time according to their specific gravity and size. In consequence of this they drop at shorter or longer distances from the starting point. The grains of equal trajectory are grouped in practically the same way as grains that are equal settling in air. There may be some difference in the ratio of diameter in the two cases, but in regard to this the author has no information. The Pape-Henneberg and Clarkson-Stanfield separators work on this principle.

Agitation takes place in the bed of sand on a vanner belt or on a jerking table. By it the grains of heavy mineral are settled into a layer beneath those of the lighter. The finest grains of heavy mineral are, however, imperfectly settled. The travel of the vanner belt carries up the heavy layer. The heavy layer on the bumping or jerking table is removed by the same jerking movement which makes the layers.

Greasy Flotation.—When particles refuse to become wetted they may float in a little dimple in the surface of the water, or if immersed they may retain attached to them air bubbles which float them up later. This principle, however, is so unreliable and difficult to control that it is usually considered more an injury than a benefit.

§ 642. *Plate Amalgamation.*—When pulp containing free gold, freshly brightened by the action of the stamps, flows over, or, still better, impinges upon a clean amalgamated plate the gold particles are instantly amalgamated and cemented to the plate while the sand flows off.

The Greased Plate.—When diamond bearing sands are fed with water upon an inclined table with a suitable coating of grease upon it the diamonds stick to the grease and are retained, while the quartz sand flows off with the water.

Magnetism.—When mixed magnetic and non-magnetic sands are brought within the sphere of attraction of a magnet the former are attracted while the latter are not. When mixed particles of more magnetic and less magnetic power are subjected to an electromagnet the current of electricity may be so adjusted as to take out only those that are more magnetic, allowing the less magnetic to move on.

Roasting for Magnetism.—When mixed minerals, one of which contains iron and is susceptible of decomposition by heat and oxidation, are roasted in a furnace at a moderate heat with a flame of limited oxidizing power, the iron mineral goes over into magnetic oxide which is strongly attracted by the magnet, while the other does not. The removal of pyrite from blende is an illustration.

Roasting for Porosity.—When two minerals, one of which is more susceptible to decomposition by heat and oxidation than the other, are roasted at a moderate heat the former becomes soft, porous or spongy in form and practically lighter in specific gravity, while the latter remains unchanged. The removal of pyrite from cassiterite (tinstone) is an illustration.

Decrepitation.—If a product, consisting of a crystallized mineral and an amorphous mineral, or of two crystallized minerals which decrepitate at different temperatures, be heated on a plate one of the minerals may decrepitate or break up into small fragments while the other remains unchanged. The removal of barite from blende is an illustration of this.

§ 643. *Centrifugal Force.*—If an emulsion of two liquids be placed in a strong cylinder which is being revolved at high speed, the lighter component liquid seeks the center of the cylinder while the heavier seeks the circumference. This principle is used in the milk separator. If water carrying fine mineral slimes be put in the above cylinder the solid particles all seek the circumference, and probably do so in the same order that they would fall under free settling conditions. It would seem, therefore, that the best that could be expected would be the unwatering of fine pulp. The efforts to utilize this principle have not produced a machine which is generally accepted in ore dressing.

Brittleness under Crushing Force.—Of two minerals being subjected to crushing by pressure as with rolls, one many be brittle and break easily to fine grains, while the other is tenacious or even malleable, and refuses to be broken finely. Native copper and gangue may be so separated, but the separation is incomplete since there is always some fine copper to go with the gangue.

Friability under a Blow.—Of two minerals subjected to the beating action of high speed revolving beaters, one may be broken into small grains while the other is not. The Vapart Disintegrator has been used to separate blende from pyrite by this principle.

§ 644. COMBINATIONS OF PRINCIPLES OF SEPARATION.—If the above principles of concentration be used alone uncombined with others, they would in most cases give very incomplete concentration of values or none at all. But on the other hand, if they are suitably combined a separation may be made as complete as commercial conditions will allow. Some of these combinations will now be given:

Sizing before Sorting is a combination illustrated in trommels followed by jigging with water or air, and in screening followed by Clarkson-Stanfield centrifugal dry separators. In both of these groups the screening places together grains of the same size, but different gravities, and the jigging or the dry separating separates the heavier grains of each group from the lighter.

Sizing followed by Agitation is a combination illustrated by slime table middlings treated on a vanner. Here the slime table has removed the larger part of the fine concentrates, and sends its middlings, which are coarser, to a vanner, which separates the valuable minerals from the waste, making a very appropriate grouping of machines.

Sizing followed by Magnetism and by Sorting occurs in trommels followed by Wetherill magnets and by jigs in Mill 92. The trommel puts like sizes together, the magnet takes out the franklinite suitable for zinc oxide furnace and spiegel furnace, and the jig saves the willemite and zincite from the limestone for the spelter furnace.

§ 645. *Sorting before Sizing* is illustrated by a classifier followed by a slime table, or by a Pape-Henneberg dry separator followed by a slime table. The box classifier or Pape-Henneberg machine puts the small grain of mineral of higher gravity with the larger grain of lower, and the table following, by its quality of sizing, retains the small grain of heavy mineral and rejects the large grain of waste.

Sorting followed by Agitation occurs where a classifier is followed by a vanner. This is not an entirely logical method, as the vanner does not require the larger grains of heavy mineral to be taken out. It is really an expedient to get a series of products to be treated by a series of vanners.

Sorting followed by Suction is shown by a hydraulic classifier followed by a bedded jig. The classifier puts the smaller grains of heavy mineral with the larger grains of lighter mineral. The bedded jig by suction draws down the small grains of heavy mineral through the interstices into the hutch below.

Sorting followed by Suction and again by Suction occurs where a classifier is followed by a roughing jig and by a finishing jig. The classifier puts the larger lighter grains with the smaller heavier. The roughing jig with its coarse bed and rapid treatment rejects the largest light waste, yielding a hutch product of small quantity for the finishing jig to treat more slowly with a finer bed. On the finishing jig light particles are lifted during pulsion while the fine heavy particles are drawn down through the bed into the hutch during suction.

Amalgamation followed by Agitation occurs where an amalgamated plate is followed by a vanner. The amalgamated plate saves the bright free gold and the

vanner saves the rusty gold and the values that are associated with the heavy mineral.

Amalgamation and Agitation followed by Sorting, Sizing, and Agitation is a combination shown by amalgamated plate, vanner, classifier, canvas table, and vanner. The plate takes the clean gold, the first vanner the coarser, heavy values, the classifier throws away in its spigot product the coarse waste, the canvas table throws away a finer waste product, and finally the little vanner saves the finest values, rejecting the finest waste.

§ 646. Various other combinations are in use as will be seen by the reader when he studies the mill schemes, and furthermore, new combinations may suggest themselves to him.

Theoretically the principles would allow a perfect separation, but practically such is rarely, if ever, obtained. This incompleteness of the separation is due to various causes, the complete removal of which is not commercially possible. Considering Mills 1 to 43 inclusive, which have the valuable mineral generally in the form of sulphide associated with gangue, we have, after crushing, the valuable minerals existing as: (*a*) compact grains, (*b*) flattish grains, (*c*) included grains, and (*d*) fine slimes. The compact grains (*a*) are easily separated unless the machines are run too fast. The flattish grains (*b*) are difficult to separate owing to their slowness in settling. The included grains (*c*) prevent a perfect separation since they oblige us to send gangue into the heads and values into the tailings, or else make a middling product requiring re-treatment. This middling product will include also some of the flattish grains. The fine slimes (*d*) are saved with difficulty because they settle so slowly, and are so easily carried forward by water currents that the commercial limit is reached before the last of the values is saved. A discussion of the commercial limits in ore dressing will be found in § 832.

Schemes of Mill Treatment.

§ 647. The great variety of states of mineral aggregation existing in ores, which may indicate entirely different treatment for two ores of even identically the same chemical composition, seems to make it necessary that this work should lay before its readers a great many mills, representing as great a number of variations as possible. In this way the intelligent reader will see how others have handled the various difficulties of their problems, will form his own opinions as to their virtues and faults, and will derive guidance for the solution of his own problems. With this aim in view the following mill schemes are inserted.

(*a*) simple jigging mills using hand jigs.

§ 648. This group includes Mills 1, 2 and 3, and a general description of Hand Jigging at Joplin. Hand jigging plants are generally used on mine fines without crushing, to bring up ores that are already moderately high grade, that is, to put three tons or less of ore into one ton of concentrates. They are generally used without a breaker; for whenever it pays to put in the latter with the necessary engine it is usual to go further and add a pump and power jigs.

The hand jig is one of the cheapest and simplest washers, and can be put together with few tools in out of the way places; where labor is cheap the cost per ton is low, and when the tonnage is low the simplicity of the hand jig gives it preference over the more complicated power jigging plants. It is very useful in the early stages of mining and concentrating operations to settle the questions how much can be saved, what is the quality of the valuable minerals that are saved, and what is probably the best method of concentrating. There are certain

districts, particularly in the Missouri and Kansas zinc regions, where the seat of mining operations changes every little while and the hand jig can be picked up and moved to the new plant with little cost. A more elaborate mill could not be easily moved. At Granby, Missouri, the miners with their hand jigs (Mill 2) partially concentrate the ore and the concentrates are finished in a larger, more systematic mill (Mills 16 and 17).

§ 649. MILL NO. 1. THE GENESEE-VANDERBILT MINING COMPANY, GUSTON, COLORADO.—The mill runs day shift only. The ore consists of the economic minerals gold and silver bearing pyrite, galena, blende and a little polybasite, and a gangue of quartz, porphyry, barite and clay. The pyrite has very little value, and is kept out as much as possible in the mine. The copper in the ore is rarely above 3%. The problem is to save the gold, silver, lead and copper. The ore is picked in the mine into shipping ore which goes to smelter and concentrating ore which goes to the mill and is shoveled to (1).

1. Gravel screen. Oversize to (2); undersize to (3).
2. Picking floor. Smelting ore to smelter; residue to waste.
3. From (1). Hand jig with sieve having ⅜-inch square holes. Top skimmings to waste; bottom skimmings to (5); hutch (when enough has accumulated) to (4).
4. Same jig with an 8-mesh sieve laid over the ⅜-inch sieve. Top skimmings to waste; bottom skimmings and hutch to (5).
5. From (3) and (4). Concentrates floor. They are sacked and shipped to smelter.

Laborers' wages are $2.50 per day, mechanics' $3.70. The price of board is $1 per day; of coal $6.50 per ton delivered.

§ 650. MILL NO. 2. GRANBY HAND JIG, GRANBY, MISSOURI.—Capacity 8 tons per day (probably 10 hours). The mill runs day shift only, 6 days per week. The ore consists of the economic minerals blende, calamine and galena in coarse crystallization and a gangue of quartz, flint, calcite and dolomite. The problem is to save the zinc and lead. The ore is hoisted from the mine by bucket and hand whin to (1).

1. Spalling floor. The ore is broken to 3 inches diameter and shoveled to (2).
2. Trough washer. Clay and fine stuff to waste; coarse stuff to (3).
3. Gravel screen with 1¼-inch square holes. Oversize to (4); undersize to (5).
4. Picking floor. Blende and calamine to (8); galena to (9); residue to waste.
5. From (3). Hand jig on zinc ore. Top skimmings to waste; middle skimmings to (8); bottom skimmings (when enough has accumulated) to (6); hutch to (7).
6. Same jig on galena ore. Top skimmings to (8); bottom skimmings to (9); hutch to (9).
7. From (5). Same jig on fine stuff. Products like (6).
8. From (4), (5), (6) and (7). Zinc concentrates bins. To Mill 17.
9. From (4), (6) and (7). Lead concentrates bins. To Mill 16.

The labor required is two men. The lead ore from the mine runs 5 to 50% galena, the lead concentrates, 75 to 95%; the zinc ore runs 10 to 75% blende and calamine, the zinc concentrates, 50 to 95%. One hundred tons of ore yield from 10 to 33 tons of concentrates.

§ 651. MILL NO. 3. HELL UPON EARTH, JOPLIN, MISSOURI.—Capacity 50 tons in 9 hours. The mill runs 9 hours per day, 6 days per week. The ore consists of the economic minerals blende and galena in coarse crystallization and a gangue of limestone and flint. The problem is to save the zinc and lead. Ore is hoisted to (1).

1. Receiving floor. The ore is shoveled to (2).
2. One Blake breaker, 6 × 8 inches. To (3).
3. One pair of rolls, 12 × 14 inches, set ¾ inch apart. To (4).
4. Three No. 1 or roughing hand jigs. Top skimmings to waste; middle skimmings returned to jig; bottom skimmings to (5); coarse hutch to (5); fine hutch (sludge) from rear part of jig tank sold to sludge mill.
5. One No. 2 or finishing hand jig. Top skimmings to waste; middle skimmings returned to jig; bottom skimmings to (6); coarse hutch to (6); fine hutch (sludge) sold to sludge mill.
6. One No. 3 or lead hand jig. Top skimmings (blende) to market; middle skimmings returned to jig; bottom skimmings (galena) to market; hutch (galena) to market.

The labor required is 9 men: 3 on breaker and rolls, 3 on No. 1 jigs, 2 on No. 2 jig and 1 on No. 3 jig. Wages are $1.75 per day. The power is from a boiler running at 65 pounds pressure and burning 1 ton of coal per day. An engine with cylinder 8 × 12 inches making 160 revolutions per minute furnishes 25 horse power for running the mine hoist, the breaker and the rolls. One hundred tons of ore yield 14 to 16 tons of zinc concentrates and 2 to 4 tons of lead concentrates.

§ 652. USUAL PRACTICE OF HAND JIGGING IN THE JOPLIN DISTRICT, MISSOURI.—The ore is practically the same as that described in § 663.

The roughing jig receives the undersize of a gravel screen with holes 1-inch square. The screen of the hand jig has spaces ⅜ to ½ inch (9.5 to 12.7 mm.) wide, and on it is a coarse open bottom bed of blende about 2 inches deep. The ore is shoveled on this to a depth of about 8 inches, and is jigged with a long stroke, the man standing on a spring board. His hands move as much as 12 to 14 inches, and the jig screen moves 2 to 3 inches. The downward movement of the screen is as fast as possible; this is effected by a loose eye connection. The upward movement is slow and strong for suction, and there is a slight pause at each end of the stroke. Practically all the fine galena and blende is sucked down through the jig screen into the tank; a little gangue also goes down. When the jigging is finished the screen is lifted up, the top waste layer is skimmed down to "chats" or included grains, the screen frame is again filled up with ore and jigging renewed. This is repeated five or six times. The top layer is then skimmed off to waste; the middle layer of "chats" is sent to a custom crusher; the bottom layer of concentrates is picked by hand into two products, blende and galena which go to concentrates bins. The "smittem" which passes through the jig screen and settles in the jig tank is shoveled from the tank to the jig screen to drain and then skimmed out upon the platform. This process concentrates 4 or 5 tons into 1 ton. Sometimes the "smittem" is rejigged on the roughing jig using a deeper blende bed. This makes "second smittem" which is much cleaner than the "first smittem," 3 or 4 tons being reduced to 1 ton.

The cleaning jig has the same size of screen as the roughing jig, but it uses a deeper, finer, closer bottom bed. The motion for the cleaning jig is a short quick stroke with very small motion, an art that has to be learned. The "smittem" is treated with a galena bottom bed. This takes out the galena as pure product in the jig tank below. The jig yields besides this, top skimmings sent to the platform to be recleaned for blende; a lead middling product returned to the next charge; and lead bottom skimmings sent to the lead bin. After the lead has all been taken out the jig screen is charged with a blende bottom bed deeper, finer and closer than that of the roughing jig, and the lead-free zinc-charged skimmings are cleaned upon it. This operation yields top skimmings to waste, middle skimmings returned with next charge, bottom skimmings and clean blende siftings in the tank which go to the sludge mill.

Two roughing jigs keep one cleaning jig busy. A three-jig plant in six 9-hour days can concentrate 100 tons of mine ore (rough dirt) carrying 6 to 7% zinc, and requires three men on the jigs and one on the picking of the oversize of the 1-inch gravel screen. From 100 tons of ore they get 25 tons of "first smittem," or 8 tons of "second smittem," or 7 tons of zinc and lead concentrates.

The rough stuff and "chats" go to the custom crusher together where they are crushed to pass through a screen with ½-inch holes, and are then returned and treated on the roughing jig. The work of the hand jigging mills is generally considered to be about 80% as efficient as that of the power jigging mills given in § 662 and § 663.

(*b*) PLANTS USING LOG WASHERS OR OTHER SIMILAR WASHING DEVICES WITH OR WITHOUT JIGS.

§ 653. This group includes Mills 4, 5, and the Iron Mountain mill on iron ore, and Mills 6, 7, 8, and the Mons plant on phosphate. Where large quantities of worthless clays are mixed with lumps and sands containing valuable minerals, the log washer has proved superior to all other devices for separating the former from the latter preparatory to the final separation by hand picking, jigging, etc. It yields the lumps and sands at the upper end, and the fine waste material at the lower end. The size limit can be regulated by the slope of the trough, the quantity of water, and the height of the dam at the lower end. In Mill 4 the log prepares for screens, hand picking and jigs; in Mill 5 for screens; the Iron Mountain mill used hydraulic giants instead of log washer, and it finished the treatment by jigs; Mill 6 has only pump and screen without the log; in Mill 7 a hydraulic giant helps the disintegration of the phosphate before the log washer, while screens and further washing with a jet come later; Mill 8 has rolls before the log washer and screens after it. Mill 93 also belongs partly in this class, but as it has magnetic treatment it is put elsewhere.

In phosphate dressing in Florida, which is one of the largest centers of the industry, the deposits may be divided into four classes, as follows: (1) *Hard rock deposits* in which much of the phosphate is in large rich boulders which can be ground, and sent straight to market. Stuff that is finer and leaner has to be crushed, washed and sized as in Mill 8. (2) *Soft rock deposits* require no washing of the ore, but it is simply dried and ground for the market. (3) *Land pebble deposits* are usually mined with a steam shovel or a clam-shell dipper when the matrix is clayey, while for a sandy matrix a hydraulic giant is used to disintegrate the material and a centrifugal pump to elevate it. The treatment consists of washing, screening and drying as in Mill 7. (4) *River pebble deposits* are dredged by means of a centrifugal pump and suction pipe, or sometimes other forms of dredging apparatus may be used. The method of treatment is illustrated in Mill 6.

The Mons plant represents a European method of washing phosphate. It does not properly belong in this group, but is inserted for purpose of comparison. In comparing this plant with Mills 6, 7 and 8, the reader should notice the fineness of its crushing and the extent of its graded treatment. This seems necessary owing to the fineness of the dissemination, and the low specific gravity of the phosphate (average 3), which is only a little above that of the gangue. Although the Mons plant probably makes a better saving than the Florida plants yet it would be too costly to erect and run for ores in this country, and would be unable to compete with the simple and cheap dressing in South Carolina and Florida.

§ 654. MILL NO. 4. N. HENNINGER'S LIMONITE WASHER, TREXLER TOWN, PENNSYLVANIA.—This mill probably runs only during the day shift and not on Sunday. The ore is soft and consists of the economic mineral limonite, and

gangue. The problem is to save the coarse limonite free from gangue and from all fine stuff. The ore is shoveled into tip carts and hauled and dumped to (1).

1. Car holding 800 pounds, running on inclined hoist. To (2).

2. Log washer. Heads to (3); tailings to waste (used for filling).

3. Trommel. Sectional with $\frac{1}{16}$, $\frac{1}{2}$ and 1-inch holes. Over 1 inch to (4); through 1 on $\frac{1}{2}$ to (5); through $\frac{1}{2}$ on $\frac{1}{16}$ to (6); through $\frac{1}{16}$ to waste dump.

4. Picking table. Waste to dump; residue to blast furnace.

5. From (3). No. 1 jig. A movable-sieve jig. Hutch to (7); tailings to waste dump.

6. From (3). No. 2 jig. A movable-sieve jig. Hutch to (8); tailings to waste dump.

7. From (5). Chute, widened to small picking table at end. Waste (small in amount) to dump; residue to wheelbarrow for blast furnace.

8. From (6). Chute, widened to small picking table at end. Products like (7).

§ 655. Mill No. 5. Limonite Washer, Longdale, Virginia.—(See Figs. 191*a* and 191*b*.)—Capacity 333 tons in 10 hours (800 tons in 24 hours). The mill runs 10 hours per day, six days per week, except the classifier, which runs 24 hours per day. The ore consists of the economic mineral limonite, of concretionary structure, and a gangue of clay and shale with sandstone and pebbles. The problem is to save the limonite. The ore is hauled from the adit level of the mine in cars holding about 1 ton each, and dumped upon (1).

1. Flat grizzly with 2-inch spaces. Oversize is separated by spalling and hand picking on the grizzly into clean lumps thrown to (2), and residue broken to pass through; undersize to (3).

2. Bin for clean lumps. By cars to blast furnace.

3. From (1). Bin, holding about 50 tons. By gate and chute to cars holding $5\frac{1}{2}$ tons, hauled 3 to 5 miles. To (4).

4. Bins. Two receiving bins holding about 95 tons. By chute to (5).

5. From (4) and (8). Four log washers, in two pairs. Heads to (6); tailings to (8).

6. No. 1 screens. Four trommels with $\frac{3}{16}$-inch round holes, connected to log washers. Oversize to blast furnace; undersize to (7).

7. No. 2 screens. Four stationary inclined screens with 14-mesh square holes. Oversize to blast furnace; undersize to (9).

8. From (5). No. 3 screens. Two stationary inclined screens with $\frac{3}{16}$-inch round holes. Run alternately. Oversize by shovel to (5); undersize to (9).

9. From (7) and (8). A Johnson mechanical sand shoveler. Coarse sand to cars and thence by bin and feeder to (10); fine silt and water overflow to (12).

10. No. 4 screen. A trommel with 4-mesh square holes. Oversize (sticks, leaves, coarse lumps, etc., small in amount) to waste; undersize to (11).

11. A Richards annular classifier. Spigot to blast furnace; overflow to waste.

12. From (9). Settling ponds. Settlings and water are both waste.

The labor required is 7 men, six around the log washers and one around the classifier.

The power is furnished by a steam engine and amounts to 25 horse power for the four log washers. An average of six days' run showed 2,750 pounds of coal burned in 10 hours.

The water flows to the mill without pumping. The amount of water flowing away from the sand shoveler is 700 gallons per minute and from the classifier spigot 14.9 gallons and from the classifier overflow 80.1 gallons. This makes a total of 795 gallons per minute plus that required for the boilers and that contained in the concentrates.

One hundred tons of crude ore yield 75 tons of concentrates from the log

washers. In the classifier an average of several days showed 51.5 tons, containing 42.1% iron, treated per 24 hours, which yielded 26.19 tons of concentrates with 45.56% iron, and 25.31 tons of tailings with 38.47% iron.

§ 656. MILL OF IRON MOUNTAIN MINING COMPANY, IRON MOUNTAIN, MISSOURI.—The ore consisted of the economic mineral hematite of the hard variety mixed with considerable clay and some quartz and small quantities of apatite and pyrite in fine grains. The problem was to save the hematite. The ore was removed from its banks and disintegrated by hydraulicking. After being carried some distance by the stream it was subjected to a second treatment by hydraulic giants which further disintegrated it and washed it into bins. The water overflowed from these bins and carried away the fine clay to waste and also some fine hematite. The residue was drawn off by chutes into dump carts and hauled to the mill bins, from which it was elevated to another set of bins delivering by chutes to combined wash and sizing trommels. The oversize was hand picked if necessary, while the undersize which was not over 1 inch in size, was sized by four trommels (the first one had two sizes of holes) and a one-spigot classifier, into six sizes which were treated on Bradford eccentric movable-sieve power jigs. The overflow of the classifier was waste. The concentrates from all the jigs went to the blast furnace; the tailings from the first four were recrushed by breaker and rolls and elevated back to the first trommel; the tailings of the other two jigs were waste. The concentrates were reported as containing 68% iron.

§ 657. MILL NO. 6. PEACE RIVER PHOSPHATE COMPANY, HULL, FLORIDA.—This is a "River Pebble" deposit in the bed of the river. The ore consists of the economic mineral phosphate in nodular form loosely mixed with a gangue of sand. The nodules vary from 1½ inches down to a pin head in size; the finest is the richest. The problem is to save the phosphate above a certain grade of richness.

A flat boat is provided with a boiler, engine and centrifugal pump, and a fixed inclined screen with slots $\frac{1}{16} \times 1\frac{3}{8}$ inches in size. The centrifugal pump lifts the phosphate from the river bottom to the screen through a flexible suction pipe, about 10 inches in diameter, carried on a boom. The undersize of the screen is mostly sand, and is delivered by a pipe back over the stern of the boat into the river again; the oversize (mostly phosphate) is transferred to barges which carry it to the drying plant on shore.

In the drying plant the phosphate is put through a drying furnace, and thence goes to a trommel 4 feet in diameter, with 4 feet of ⅜-inch holes and 8 feet of 1-inch holes. The undersize of ⅜-inch goes to a second trommel 4 feet in diameter, and 16 feet long, with 14-mesh holes. The oversize of 1 inch and the undersize of 14-mesh are both below the standard, and are waste; the intermediate sizes are shipped to market.

The product contains from 58 to 63% calcium phosphate ($Ca_3P_2O_8$) and 2 to 3% iron oxide (Fe_2O_3) and alumina (Al_2O_3).

§ 658. MILL NO. 7. THE LAND PEBBLE PHOSPHATE COMPANY, PEBBLE, FLORIDA.—This runs 12 hours per day. The deposit is a "Land Pebble" deposit. The economic mineral is phosphate in nodules ranging from 1½ down to $\frac{1}{16}$ inch in size and less, with a gangue of hard blue clay. The problem is to save the phosphate. The deposit is 5 to 15 feet thick, overlaid by 3 to 12 feet of so-called sand. Between the sand and the phosphate, iron ore is sometimes found. The phosphate bed becomes richer in phosphate nodules toward the bottom. The deposit is situated in a swamp 300 feet wide, more or less, and of indefinite length, the level of which is about that of the water. The land rises slightly on each side, and at the lower end a low dam or dyke is built to raise the level of the water.

A lake was made 200 feet or more in diameter, and 20 feet deep by the dredg-

ing apparatus and method about to be described. A flat boat is provided with dredging and washing apparatus as follows: two boilers, an engine, a Cameron steam pump, a centrifugal pump, screens and two log washers. This boat, which is 60 feet long, 25 feet wide and 5 or 6 feet deep, is floated to the advance side of the lake. A pit 100 feet in diameter (enlarged from a small hand pit 10 feet in diameter and 5 feet deep), leaving a narrow strip or dyke 10 feet wide to serve as a dam, has its surface sand removed by the Cameron steam pump connected with a hydraulic giant having a 1½-inch nozzle, and by the centrifugal pump, the sand being discharged at the rear side of the lake. When the top of the phosphate has been cleaned off, a sump, 3 feet in diameter, is excavated in the phosphate, the suction of the centrifugal pump is dropped into this pit, the hydraulic giant loosens up the phosphate, and the centrifugal pump lifts it to the boat. Extra water is furnished by a little surface ditch from the 200-foot lake to help wash the phosphate into the sump, and to supply the centrifugal pump. This ditch is constructed around to the further side of the 100-foot pit, and is moved forward as the work of excavation advances. When the whole 100-foot pit has been excavated the water from the 200-foot lake is admitted by hydraulicking down the dam, and its débris is lifted by the centrifugal pump. Then another pit 100 feet in diameter is started, and the process repeated. The very first pit of all has to be made with the boilers, pumps, etc., mounted on land.

During the whole period of excavating the phosphate and of removing the dam, the washing process goes on as follows: The discharge of the centrifugal pump goes to (1).

1. No. 1 screen. A fixed inclined screen, slightly concave in cross section, 5 feet wide and 15 feet long, with slots $\frac{1}{16} \times \frac{3}{8}$ inch. Oversize to (2); undersize, waste, to rear side of the 200-foot lake.
2. A screen bottomed distributing chute with slots $\frac{1}{16} \times \frac{3}{8}$ inch. Oversize to (3); undersize, waste, to lake.
3. Two single log washers. Heads to (4); tailings, waste, to lake.
4. Grizzly. Oversize (clay balls, sand, iron ore and sticks) to waste; undersize to (5).
5. No. 2 screen. A fixed inclined screen allowing pebbles 1 inch and less in diameter to pass through. Oversize, waste, to lake; undersize to (6).
6. Transporting barges decked over flush with the gunwale. A little waste rock is picked out by hand here. These are poled by hand across the lake to the land plant, and the phosphate is washed off by a hydraulic giant to (7).
7. A sump in the bottom of the lake. The phosphate is lifted by a centrifugal pump to (8).
8. A jet washer. To (9).
9. No. 3 screen. A fixed inclined unwatering screen with slots $\frac{1}{16} \times \frac{3}{8}$ inch. A little waste is occasionally picked out here. Undersize, waste, to lake; oversize elevated to storage bin, thence by chute to revolving driers, 4 feet in diameter and 30 feet long, and thence by elevator to storage shipping bin.

The most effective disintegration of the clay is done by the powerful jet which makes the first excavation.

The men required are: 1 dredge-master, 1 fireman, 1 extra hand on the dredge, 3 to 4 men in the 100-foot pit, 2 men on the barges. The number of men on the land plant is not known by the author.

Power is furnished on the dredge by two 66 × 18-inch return tubular boilers and a 50-horse power engine.

The amount of water running into the lake from external sources is 1,000 to 1,500 gallons per minute. This is used over and over.

The final product contains from 68 to 73% calcium phosphate. The ship-

ments are 150 to 200 tons of clean, dry phosphate per day. The land plant can handle all the material from two dredges.

§ 659. MILL NO. 8. DUNNELLON PHOSPHATE COMPANY, DUNNELLON, FLORIDA.—Capacity about 400 tons in 10 hours, depending upon the richness of the rock. The mill runs 10 hours per day. This is a "Hard Rock" deposit. The economic mineral is phosphate which is mined in open pits, and has much sand, clay, etc., mixed with it as gangue. The problem is to save the phosphate. The ore comes first to a grizzly (grating); the oversize is fed to toothed rolls, and then joins the undersize which goes to a double log washer and yields tailings (fine clay and sand) which are waste, and heads (coarse material). These latter are screened on a concentric trommel with $\frac{1}{2}$-inch holes in the inner screen and $\frac{1}{16}$-inch holes in the outer screen. The oversize of $\frac{1}{2}$ inch is conveyed by an endless chain pan conveyor to the dry kilns, and while on the way the refuse is picked out; stuff through $\frac{1}{2}$ inch on $\frac{1}{16}$ inch goes to the dry kiln; the undersize of $\frac{1}{16}$ inch is waste. The kilns or heaps are 35 × 100 feet, and have wood at the bottom 2 feet thick, over which the phosphate is piled until it is 12 feet thick. It requires 25 to 30 cords of wood to dry 100 tons of phosphate. The ore as mined contains 15 to 40% commercial phosphate, that is, 100 tons of mine ore yield 15 to 40 tons of dry phosphate, which will contain 75 to 80% calcium phosphate.

§ 660. PHOSPHATE DRESSING PLANT AT ST. SYMPHORIEN, NEAR MONS, BELGIUM.—Capacity 250 tons in 10 hours. The mill runs 10 hours per day. The ore consists of the economic mineral phosphate in a gangue of yellowish white friable stone, mostly limestone with some chert. The problem is to save the phosphate. The ore is brought by cars and dumped upon (1).

1. An oscillating bar screen with $2\frac{3}{8}$-inch spaces. Water is sprayed over the ore. Oversize to (2); undersize to (4).
2. Hand picking. Flint to waste; residue to (3).
3. Blake breaker crushing to $2\frac{3}{8}$ inches. To (4).
4. From (1) and (3). Three Bourdais disintegrators crushing to $\frac{3}{8}$ inch and less. Product mixed with water goes by two raff wheels to (5).
5. Two trommels with $\frac{1}{16}$-inch holes. Oversize (mostly chert) to waste; undersize by two distributing launders with 10 spigots each, to (6).
6. Twenty classifiers, with two pockets each. Spigots of 1st pocket to (7); of 2d to (8); overflow to (16).
7. Twenty unwaterers. Spigots to (9); overflow to (16).
8. From (6) and (14). Four *spitzkasten* with 3 spigots each. 1st spigot to (10); 2d to (11); 3d to (12); overflow to (13).
9. From (7). Twenty jigs. 3-sieve jigs. Heads (3 qualities) by 3 raff wheels to (14); tailings to (16).
10. From (8). Four Linkenbach tables, 23 feet in diameter. Heads by 2 raff wheels to (14); tailings to (16).
11. From (8). Two Linkenbach tables, 26 feet 3 inches diameter. Heads by 2 raff wheels to (14); tailings to (16).
12. From (8). Two Linkenbach tables, 26 feet 3 inches in diameter. Heads by 2 raff wheels to (14); tailings to (16).
13. From (8). Two Linkenbach tables, 26 feet 3 inches in diameter. Heads to (15); tailings to (16).
14. From (9), (10), (11), (12). Eighteen settling tanks. Twelve receive concentrates from jigs and six from tables. Settlings are dug out periodically, dried and sent to market; overflow by centrifugal pump to (8).
15. From (13). Eight settling tanks. Settlings to market; overflow to (16).
16. From (6), (7), (9), (10), (11), (12), (13), (15). Centrifugal pumps. By launders to settling pits for waste.

Power is furnished by a 200-horse power engine. The power actually required is 120 horse power.

The ore contains 20 to 30% tribasic phosphate of lime ($Ca_3P_2O_8$), and the concentrates contain 40 to 50%.

Note that this mill in (4) and (5) makes use of the principle of disintegration followed by screening to get rid of part of the waste.

(c) SIMPLE JIGGING MILLS USING POWER JIGS.

§ 661. This group includes Mills 9, 10, 11, and 12 on blende ores, and Mills 13, 14, and the Sulphur Mines Company's mill on pyrite ores. These have a few machines of large capacity, mostly jigs, which may or may not be preceded by breaker and rolls. In Mills 9 and 10 the blende is in very large crystals, making little included grains or slimes when coarsely crushed. The middlings are simply sent back into the system. In Mill 12 the blende is finer, and, therefore, makes more included grains than the others. In Mills 13, 14, and that of the Sulphur Mines Company the included grains are dumped with the tailings as having prospective but no present value. The finest slimes are not saved. Mills 9 and 10 make a three mineral separation between galena, blende and gangue. Mill 11 is called a sludge mill, and cleans up the fine material from such mills as Nos. 2, 3, 9 and 10. The simplicity of these mills seems to be due to the absence of the precious metals and the coarseness of the crystallization and it does not pay to clean the tailings as closely as with many other ores.

Mills 9 and 10 represent the standard method of treating the zinc ores of Southwest Missouri. To a newcomer in the district the process seems crude, and is frequently condemned. It has been claimed by the inexperienced that there must be a large loss from the lack of graded crushing and sizing, and that one-third of the zinc, which might be partly saved by more systematic treatment, is thrown away. The fact remains, however, that other more elaborate mills, for example Mill 15, have been erected, but have not stood the test of competition with such Mills as 9 and 10. The cause of their failure lies in the local conditions. The mines are pockety and do not justify the building of an expensive mill, and the ore is in coarse crystallization, which makes the separation not very difficult.

The average ore of the district contains 2 or 3% lead and 3 to 10% zinc, mostly 5 or 6% zinc. It also contains more or less pyrite or marcasite. The galena concentrates have 76 to 83% lead, and rarely over 2% iron or zinc. Well cleaned blende concentrates will assay 62% zinc, not over 0.2% lead, and 0.75% or more iron, according to the amount of pyrite in the ore. Calculating the zinc, lead and iron into sulphides will account for 96 or 98% of the zinc concentrates, leaving only 2 to 4% of gangue. Sometimes the iron in the zinc concentrates runs up to 10 or 15%, but where it is more than 4% the value of the concentrates is decreased so that it has been found profitable to give them a roast and magnetic treatment, which makes clean blende, and roasted pyrite containing 15 to 25% zinc. In well run mills the tailings contain less than 0.2% lead, and not more than 1 or 2% zinc. An examination of the tailings shows that they contain practically no free grains of valuable mineral, but they do have more or less "chats" or included grains. This of course does not include the fine sludge. Some mills have free grains in their tailings due to poor running or to overcrowding of the mill, but under proper conditions the jigs can save all the valuable material ranging from ½ inch down to 40 mesh.

The local terms used in the Southwest Missouri district are: "dirt," which means mine ore; "mundic," which means pyrite or marcasite; "jack," which means blende or zinc concentrates; "chats," which signifies included grains,

especially middlings from the jig discharges, in which the blende is attached to or included in grains of gangue; "smittem," which signifies the unfinished fine hutch product in which the gangue is simply mixed with the blende in loose individual grains; "sludge," which signifies the fine slimes.

Simple power jigging mills were formerly used upon magnetic ores. At Crown Point, New York[68], the ore was crushed to $\frac{1}{8}$ inch, and then sized by $\frac{1}{16}$-inch screens, the two sizes being jigged separately on Wendt jigs. At Lyon Mountain, New York[75 and 76], the ore was crushed to $\frac{1}{4}$ inch, and was then jigged, without sizing, by Conkling jigs.

§ 662. MILL NO. 9. HENRY FAUST, GALENA, KANSAS.—Capacity 60 to 100 tons in 10 hours on ore containing 25% blende and crushed through $\frac{1}{2}$ inch (see Table 296). The mill runs 10 hours per day, six days per week. The ore is similar to that in Mill 10, except that it is richer, but the machinery and the process are much the same. The plant consists of a Blake breaker, two pairs

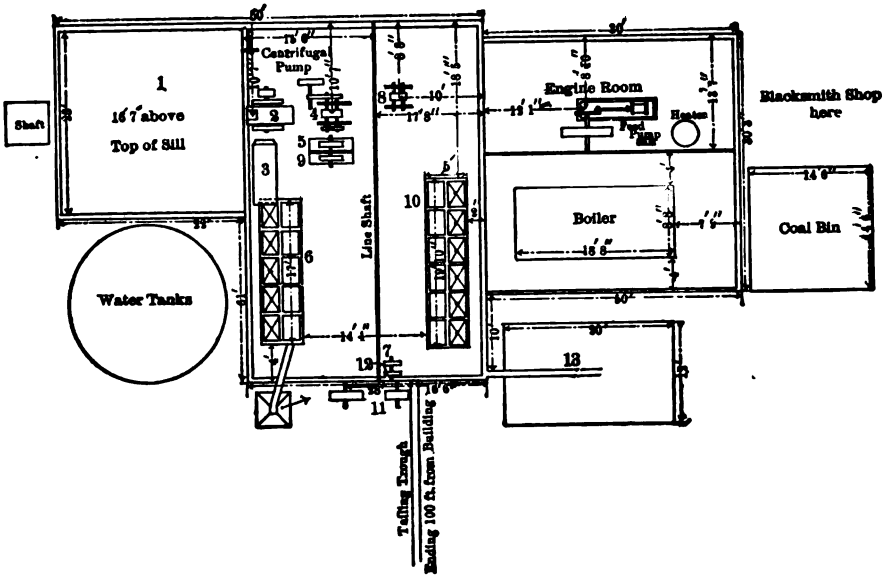

FIG. 511.—PLAN OF MILL 10.

of rolls, elevators, trommel, a 5-sieve roughing jig and a finishing jig, both of the Harz type, Faust pattern.

§ 663. MILL NO. 10. I KNOW MINING COMPANY, JOPLIN, MISSOURI.—(See Fig. 511.)—Capacity 100 to 120 tons in 10 hours. The mill runs 10 hours per day, 6 days per week. The ore consists of the economic minerals blende and galena, almost always in coarse crystallization, and a gangue chiefly of flint and limestone. The problem is to save the zinc and lead. The ore is hoisted in a bucket with a capacity of 1,100 pounds, to (1).

1. Receiving floor. By shovel to (2).
2. One No. 1 Blake breaker, 10 × 13 inches, crushing to $\frac{3}{4}$ inch. To (3).
3. From (2) and (5). One No. 1 trommel with $\frac{1}{2}$-inch round holes. Oversize to (4); undersize to (6).
4. One pair of No. 1 or roughing rolls, 22 × 14 inches, set close together. To (5).
5. From (4) and (8). No. 1 bucket elevator ("ore elevator"). To (3).

6. From (3). No. 1 or roughing jig. A 5-sieve Harz jig. 1st discharge wheeled to (14); 2d wheeled to (12); 3d wheeled to (12) or to (7); 4th and 5th to (7); all five hutches to (9); tailings to (11).

7. From (6) and (10). No. 2 bucket elevator ("chats elevator"). To (8).

8. One pair of No. 2 rolls ("chats rolls"), 15 × 14 inches, set close together. To (5).

9. From (6). No. 3 bucket elevator ("smittem elevator"). To (10).

10. No. 2 or cleaning jig. A 6-sieve Harz jig. 1st discharge wheeled to (14); 2d, 3d and 4th, wheeled to (12); 5th and 6th to (7); 1st hutch wheeled to (14); 2d, 3d, 4th, 5th and 6th hutches wheeled to (12); tailings to (11).

11. From (6) and (10). No. 4 bucket elevator ("tailings elevator"). To dump.

12. From (6) and (10). No. 5 bucket elevator ("jack elevator"). To (13).

13. Bin for zinc concentrates, holding 100 tons. To market.

14. From (6) and (10). Bin for lead concentrates. To market.

The labor required is: 1 foreman, 2 breaker men, 2 jig men and 1 engineer. Wages range from $1.50 for laborers to $2.50 for foreman.

The power is furnished by an 85-horse power boiler run at 80 pounds pressure per square inch and a 50-horse power Atlas engine. Three tons of coal costing $2 per ton are burned per day. Power is distributed as follows: mine hoist, 20 horse power; mine pump, 10; mill pump, 10; breaker, 15; trommel, 1; 5 elevators, 15; 2 pairs of rolls, 10; 2 jigs, 10.

The water is pumped from a nearby pond up 25 feet to a tank at the top of the mill, 4 feet above the receiving floor, by a centrifugal pump running at 825 revolutions per minute, and discharging through a 3-inch pipe.

The ore contains ¼% lead and 9½% zinc; the lead concentrates contain 80% lead and a trace of zinc; the zinc concentrates contain 63% zinc and a trace of lead; the tailings contain from a trace up to 1% zinc and a trace of lead. One hundred tons of ore yield 8½ to 10 tons of zinc concentrates and 400 to 500 pounds of lead concentrates.

§ 664. MILL NO. 11. ALMA EMMONS SLUDGE MILL, GALENA, KANSAS.—Capacity 60 tons in 10 hours. The mill runs 10 hours per day, 6 days per week. The ore is the fine unfinished blende ore mainly from the hand jigging mills like Mill 3, but sometimes from those like Mills 9 and 10. The problem is to save the zinc and lead. The ore is hauled by wagon to (1).

1. Receiving floor. Shoveled to (2).

2. One No. 1 concentric trommel, with inner screen of 1-inch square holes and outer of 1-mm. round holes. Over 1 inch, to waste; through 1 inch on 1 mm., to (3); through 1 mm. to (5).

3. Hand jigs. 1st or top skimmings to waste; 2d or middle skimmings returned to jig; 3d skimmings (blende) to market; 4th or bottom skimmings (galena) to market; hutch to (4).

4. Same jig on fine stuff with a finer screen. Top skimmings to waste; bottom skimmings and hutch (blende) to market.

5. From (2). One No. 1 buddle. A convex circular buddle. Inner ring (galena and blende) to (6); second ring (blende and galena) to (7); third ring (blende and gangue) to (8); outer ring to waste.

6. From (5) and (7). One No. 2 buddle treating galena stuff, run about every six months. A convex circular buddle. Inner ring (galena) to market; second ring (galena and blende) returned to buddle; third ring (blende) to market; outer ring (blende and gangue) to (7).

7. From (5), (6) and (8). No. 2 buddle, treating blende stuff. Inner ring (galena and blende) to (6); second ring (blende) to market; third ring (blende and gangue) returned to buddle; outer ring to waste.

8. From (5). One No. 3 buddle. A rectangular buddle. Upper portion (blende and gangue) to (7); middle portion (gangue and blende) returned to buddle; lower portion to waste.

The ore or sludge contains 8 to 15% blende; the jig concentrates contain 95% blende, and the buddle concentrates, 90%. One hundred tons of sludge yield 8 to 17 tons of zinc concentrates, and a small amount of lead concentrates. The mill saves about 90% of the zinc.

§ 665. MILL No. 12. FRIEDENSVILLE ZINC COMPANY, FRIEDENSVILLE, PENNSYLVANIA.—Capacity 120 to 135 tons in 10 hours. The mill runs 10 hours per day, 6 days per week. The ore consists of the economic mineral blende, mostly in coarse crystallization, and a gangue of limestone with a little quartz. The ore is hand picked in the mine. Lumps larger than 6 inches are hoisted in bucket to (1); stuff smaller than 6 inches is hoisted separately in bucket to (7).

1. Picking floor. Waste to dump; residue to (2).

2. From (1), (9) and (11). One No. 1 Blake breaker, 6 × 8 inches, crushing to 1 inch. To (3).

3. From (2) and (4). One pair of No. 1 rolls, 26 × 12 inches, set close together. To (4).

4. No. 1 screen. A trommel with 2-mesh square holes. Oversize by sand wheel elevator to (3); undersize to (5).

5. From (4), (14) and (15). Four No. 1 jigs. Movable sieve power jigs. Top skimmings to waste; middle skimmings returned to jig; bottom skimmings to spelter furnace; hutch shoveled to (6).

6. From (5), (12) and (15). Two No. 2 jigs. Movable sieve power jigs. Top skimmings to waste; middle skimmings returned to jig; bottom skimmings to spelter furnace; hutch to (13).

7. From mine bucket. No. 2 screen. An inclined gravel screen with 1½-inch square holes. Oversize to (8); undersize to roaster for oxide or to (10).

8. No. 1 rinsing table perforated with ¾-inch round holes. Oversize shoveled to (9); undersize to (12).

9. No. 1 picking table. Stationary rectangular table covered with old trommel screens. 1st grade ore to spelter furnace; 2d to (2); 3d to roaster for oxide; waste to dump.

10. From (7). No. 2 rinsing table perforated with ⅜-inch round holes. Oversize to (11); undersize to (13) or, if very muddy, to (14) or (15).

11. No. 2 picking table. Like No. 1 picking table. Products like (9).

12. From (8). Four No. 3 jigs. Movable sieve power jigs. Products like (5).

13. From (6) and (10). One No. 4 jig. A 4-sieve Harz jig. Top skimmings returned to jig; bottom skimmings and hutch to spelter furnace; tailings to waste.

14. From (10). A trough washer. Heads (gravel and sand) to (5); tailings (fine clay) to waste.

15. From (10). No. 3 screen. A trommel with ⅛-inch round holes. Oversize to (5); undersize to (6).

The labor required is 1 foreman, 1 engineer, 1 fireman, 1 coal wheeler, 1 screen man, 18 boys and men in picking department, 7 men and 6 boys in jigging department, 1 trough washer man and 1 helper. Wages range from $0.25 per day for small boys to $1.25 for men laborers and to $2 for the foreman. Board costs $15 per month; coal, $2 per ton; wood, $2.60 per cord.

Power is furnished by a 15-horse power engine. The water required is 62,000 gallons per 10 hours.

The ore contains 16 to 20% zinc; the concentrates, 46 to 48% zinc; the tailings, 10 to 15% zinc. One hundred tons of ore yield about 33 tons of con-

centrates. There are also about 35 tons of ore picked out yearly in the mine which does not need any concentration. It will be noted that there are two grades of concentrates: the first grade which goes to the spelter furnace, for making metallic zinc, and the second grade which goes to the roaster for making zinc oxide.

§ 666. MILL No. 13. EUSTIS MINING COMPANY, EUSTIS, PROVINCE OF QUEBEC, CANADA.—Capacity of the rock house 60 tons in 10 hours; of the mill 50 tons in 10 hours. Both run 10 hours per day, 6 days per week, but the mill is run only every other summer. The ore consists of the economic minerals pyrite, chalcopyrite, arsenopyrite, enargite and a gangue of quartz and mica schist. The problem is to save the sulphur, copper, silver and arsenic. The market has called for varying schemes of dressing at different times. The most complete scheme produced the following classes: (*a*) pyrite, low in copper, for sulphuric acid works; (*b*) pyrite, high in copper and low in silver, for copper furnace; (*c*) pyrite, high in copper and high in silver, to silver-copper furnace; (*d*) pure quartz and chalcopyrite (flux ore) to copper refining furnace; (*e*) arsenopyrite stored for a possible value later; (*f*) mica schist to waste. The scheme used at present is as follows: The ore is hoisted in cars, wheeled to the rock house and dumped upon (1).

Rock House.

1. No. 1 grizzly with 2-inch spaces. Oversize to (2); undersize to (4).
2. Spalling floor. The ore is broken with sledges and hand picked. Arsenical ore to its heap; flux ore to its heap; waste to dump; residue to (3).
3. One No. 1 Blake breaker, 10 × 16 inches, crushing to 2 inches. To (5).
4. From (1). One No. 2*a* and one No. 2*b* grizzly. Fixed inclined screens with ¾-inch square holes. The second screen is put in below and treats the oversize of the first to complete the work. Oversize of No. 2*b* to (7); undersize of both by car ¾ mile to (8).
5. From (3). One No. 3 grizzly. A fixed inclined screen with ¾-inch square holes. Oversize to (13); undersize to (6).
6. One No. 4 grizzly. A fixed inclined screen with ½-inch square holes. Oversize to (13); undersize by car ¾ mile to (8).
7. From (4). Washing box and stationary picking table. Ore is rinsed on a plate with ¼-inch round holes. Oversize shoveled to picking table which yields waste by barrows to dump and good ore to (13); undersize by cars ¾ mile to (8).

Mill.

8. From (4), (6) and (7). Receiving floor. Shoveled to (9).
9. One No. 1 concentric trommel with inner screen of ½-inch square holes and outer of ¼-inch square holes. Over ½-inch to (10); through ½ on ¼-inch to (11); through ¼-inch to (12).
10. Four No. 1 jigs. 1-sieve Collom jigs. Hutch to (13); tailings to (14).
11. From (9). Two No. 2 jigs. 1-sieve Collom jigs. Hutch to (13); tailings to (14).
12. From (9). Two No. 3 jigs. 1-sieve Collom jigs. Hutch to (13); tailings to (14).
13. From (5), (6), (7), (10), (11), (12). Concentrates piles. These are shipped to sulphuric acid works, and after the removal of the sulphur, the residue is turned over to copper works to save the copper and silver.
14. From (10), (11), (12). Tailings launder to dump 150 feet distant.

The labor required is 21 men. The rock house employs 1 foreman, 1 engineer

and fireman, 3 men spalling, 2 men at barrows, 4 boys picking, 1 man in washing box, 2 boys at breaker. The mill employs 1 foreman, 1 engineer and fireman, 2 shovelers, 3 boys. Wages range from \$0.40 or \$0.50 per day for boys up to \$1.20 for men laborers and to \$2 for foremen. Board costs \$13 per month; wood, \$2.40 per cord; coal would cost \$4.30 per ton, if used.

The power at the rock house is from a boiler 10 feet long, 44 inches diameter, with 38 tubes 3 inches in diameter, run at 75 pounds pressure per square inch, and burning ½ cord of wood per 10 hours; and an engine with cylinder 8 × 12 inches, making 150 revolutions per minute, cutting off at ¾ stroke, and developing about 20 horse power. The power at the mill is from a boiler 16 feet long, 5 feet diameter, with 65 tubes 3¼ inches diameter, run at 60 pounds pressure per square inch, and burning 1⅛ cords of wood in 10 hours; and an engine with cylinder 10 × 14 inches, making 90 revolutions per minute and cutting off at ¾ stroke.

Water is pumped from the river a distance of 910 feet by a Worthington duplex pump, steam cylinders 7½ × 10 inches, water cylinders 6 × 10 inches, making 60 strokes per minute, and running under a steam pressure of 55 pounds per square inch. The suction pipe is 550 feet long, and the pump is 20 feet above the river at low water; the discharge pipe is 360 feet long, and the tank is 70 feet above the pump.

One hundred tons of ore hoisted yield in the rock house 20 tons of waste, 57 tons of shipping ore containing about 42% sulphur, 21 tons of milling ore containing about 36% sulphur, 2 tons of flux ore containing about 35% sulphur. The 21 tons of milling ore yield in the mill 4 tons of coarse concentrates containing about 40% sulphur, 5 tons of medium concentrates containing about 40% sulphur, 9 tons of fine concentrates containing about 42.5% sulphur and 3 tons of tailings.

§ 667. MILL NO. 14. THE NICHOLS CHEMICAL COMPANY, CAPELTON, PROVINCE OF QUEBEC, CANADA.—Capacity very variable depending upon the needs of the market. The ore consists of the economic minerals pyrite, chalcopyrite and arsenopyrite, and a gangue of quartz and mica schist. The problem is to save the sulphur in as coarse condition as possible. There are two plants, one at the large mine and one at the Capel mine, which is smaller. At the latter the ore is dumped upon (1).

1. No. 1 grizzly with 2½-inch spaces. Oversize to (5); undersize to (2).
2. No. 2 grizzly with ¾-inch spaces. Oversize to (6); undersize to (3).
3. From (2) and (5). No. 3 grizzly with §-inch spaces. Oversize to (6); undersize to (4).
4. No. 4 grizzly. A gravel screen with ¾-inch square holes. Oversize to (6); undersize to (7).
5. From (1). Spalling floor accompanied by hand picking. Good lump pyrite, broken to 2 or 2½ inches, to market; waste wheeled to dump; small material shoveled to (3).
6. From (2), (3) and (4). Washing tank and stationary picking table. Lump pyrite to market; waste to dump; tank settlings to (7).
7. From (4) and (6). Jigs. 2-sieve accelerated jigs. Hutches to market; tailings to waste.

At the large mine the scheme is practically the same.

One hundred tons of ore yield 50 tons of concentrates. The coarse jig concentrates contain 35% sulphur and upward; the fine jig, 36% and upward.

§ 668. SULPHUR MINES AND RAILROAD COMPANY, SULPHUR MINES, VIRGINIA.—Capacity 130 tons in 10 hours. The mill runs 10 hours per day. The ore consists of the economic mineral pyrite, and a gangue of hornblendic schist. The problem is to save the sulphur.

1. The ore is hoisted from the mine to (2).
2. A grizzly with 2½-inch spaces. Oversize to (3); undersize to (4).
3. Picking floor. Shipping ore to (17); residue by car to (6).
4. From (2). Shoveling floor. The ore is shoveled by a fork with 1¼-inch spaces. Oversize to (5); undersize by car to (6).
5. Hand picking. Shipping ore ("spall ore") to (17); residue by car to (6).
6. From (3), (4), (5). Two No. 1 Dodge breakers, 8 × 14 inches, crushing to ½ inch. To (7).
7. One pair of No. 1 rolls, 36 × 14 inches, set ⅝ inch apart. To (8).
8. From (7) and (9). No. 1 screen. A stationary screen, sloping 45°, 30 inches wide and 120 inches long, with ⅝ × 1-inch slots. Oversize by elevator to (9); undersize to (10).
9. One pair of No. 2 rolls. Like (7). By elevator to (8).
10. From (8). No. 2 screen. Like (8), but slots are ¼ × ¾ inch. Oversize to (13); undersize to (11).
11. No. 3 screen. Like (8), but slots are ⅛ × ⅝ inch. Oversize to (14); undersize to (12).
12. Two No. 1 hydraulic classifiers with three conical pockets 28, 34 and 40 inches in diameter respectively. Spigots to (15); overflow to (18).
13. From (10). Four No. 1 jigs. One-sieve Harz jigs with sieve 15 × 30 inches; tail board 4 inches high; 111 throws per minute of 1¼ inches each; bottom bed of one complete layer of iron shot 1 inch diameter covered by another complete layer of ½ inch diameter. Hutches to (15); tailings to (18).
14. From (11). Six No. 2 jigs. Two-sieve Harz jigs, with sieves 15 × 28 inches, and throw of ⅝ inch; otherwise like (13). Hutches to (15); tailings to (18).
15. From (12), (13), (14). Settling tank for concentrates. Settlings by bucket elevator to (16); overflow to (18).
16. A Bolthoff drier, 6 × 42 feet in size with cast iron plates traveling about 2 feet per second. By Robins belt conveyor, moving 4 or 5 feet per second, to (17).
17. From (3), (5), (16). Shipping car, to market.
18. From (12), (13), (14), (15). Waste dump.

Power is furnished by a 150-horse power Corliss engine.

The mine ore runs 28 to 33% sulphur and 13% silica. The lump shipping ore runs 40% sulphur or more, and 5½ to 6% silica. The fine concentrates run 42% sulphur and 5½ to 6% silica. The tailings run 11% sulphur. 100 tons of mine ore yield about 44 tons of lump shipping ore, 44 tons of fine concentrates and 12 tons of tailings.

In this mill all the screens are run dry as they would be eaten out in 48 hours by the acid water if run wet.

(*d*) COMPLEX JIGGING MILLS WITH BREAKERS, ROLLS, SCREENS, CLASSIFIERS, JIGS, AND TABLES OR VANNERS, DRESSING BLENDE OR PYRITE.

§ 669. This group includes Mills 15 to 19, the Vieille Montagne mill and Mills 19 to 21. Mills 16, 17, 18, 19, and the Vieille Montagne mill are making a three mineral separation between galena, blende and gangue. Mills 20 and 21 have three minerals, yet do not make a three mineral separation. Mill 20 has auxiliary rolls and jigs for re-treating middlings; Mill 21 has auxiliary Huntington mill, classifier, jigs, and slime table for re-treating middlings; Mills 15, 16 and 17 recrush middlings in auxiliary rolls and send the pulp back into the system. Mills 18 and 19 make no middlings. This is probably because the blende tailings are stacked up for their prospective value. The Vieille Mon-

tagne mill is put into this group to indicate one way that the question of three mineral separation has been solved in Europe. In it the middlings are re-crushed by auxiliary rolls and re-treated by jigs which in turn make middlings to be again recrushed and rejigged. Such an elaborate mill appears not to be suited to the conditions in this country.

§ 670. MILL No. 15. KOHINOOR MILL, EMPIRE ZINC COMPANY, JOPLIN, MISSOURI.—Capacity 34 tons in 10 hours. The mill runs 10 hours per day, 6 days per week. The ore consists of the economic mineral blende, almost always in coarse crystallization, and a gangue of flint. The problem is to save the zinc. The ore is hoisted and brought 200 feet in cars to (1).

1. Receiving floor. By shovel to (2).
2. No. 1 Blake breaker, 6 × 10 inches, crushing to 1 inch. To (3).
3. One pair of No. 1 rolls, 22 × 14 inches, set ¾ inch apart. To (4).
4. From (3) and (17). No. 1 bucket elevator. To (5).
5. One No. 1 trommel with 12.3-mm. round holes. Oversize to (11) or (17); undersize to (6).
6. One No. 2 trommel with 4.7-mm. round holes. Oversize to (12); undersize to (7).
7. One No. 3 trommel with 2.3-mm. round holes. Oversize to (13); undersize to (8).
8. One No. 1 hydraulic classifier with two spigots. 1st spigot to (14); 2d to (15); overflow to (9).
9. One No. 1 surface current box classifier with two spigots. 1st spigot to (18); 2d to (19); overflow to (10).
10. One No. 1 whole current box classifier with one spigot. Spigot to (20); overflow to (22).
11. From (5). One No. 1 jig. A 4-sieve Harz jig. 1st, 2d and 3d discharges to (21); 4th to (16); 1st, 2d and 3d hutches to (21); 4th to (16); tailings to (22).
12. From (6). One No. 2 jig. A 4-sieve Harz jig. Products like (11).
13. From (7). One No. 3 jig. A 4-sieve Harz jig. Products like (11).
14. From (8). One No. 4 jig. A 4-sieve Harz jig. 1st discharge to (21); 1st, 2d and 3d hutches to (21); 4th to (16); tailings to (22).
15. From (8). One No. 5 jig. A 4-sieve Harz jig. Hutches to (21); tailings to (22).
16. From (11), (12), (13), (14). No. 2 bucket elevator ("chats elevator"). To (17).
17. From (5) and (16). One pair of No. 2 rolls, 22 × 14 inches, set close together. To (4).
18. From (9). One No. 1 convex revolving slime table. Heads to (21); middlings to (20); tailings to (22).
19. From (9). One No. 2 convex revolving slime table. Products like (18).
20. From (10), (18), (19). One No. 3 convex revolving slime table. Products like (18), the middlings being returned to the table.
21. From (11), (12), (13), (14), (15), (18), (19), (20). Bins for concentrates. The jig concentrates are collected in boxes below the jigs, shoveled to barrows and wheeled to the concentrates bins in the yard. The concentrates from the tables are collected in settling tanks, shoveled to barrows and wheeled to the concentrates bins.
22. From (10), (11), (12), (13), (14), (15), (18), (19), (20). Tailings launder to waste.

The labor required is 1 foreman, 1 breaker man, 1 table man and 1 engineer. Wages range from $1.75 per day for laborers to $2.50 for foreman. Board costs $16 per month; coal, $2.50 per ton; wood, $3 per cord.

The power is furnished by a steam boiler 18 feet long, 60 inches diameter, with 54 tubes 4 inches diameter, running under a pressure of 80 pounds per square inch; and an engine with cylinder 12 × 16 inches, making 178 strokes per minute, and cutting off at ⅞ stroke.

This mill was constructed to do the same type of work as Mill 10, but the latter is the type still preferred. The mining and milling work in the Joplin district is more or less transient, and the simpler the mill the better it suits the conditions.

This mill saves about 85% of the zinc. In § 897 are given some results of the work in this mill.

§ 671. MILLS NO. 16 AND NO. 17. GRANBY MINING AND SMELTING COMPANY, GRANBY, MISSOURI.—Capacity 60 tons in 10 hours. The mill runs 10 hours per day, six days per week. The ore consists of the economic minerals blende, calamine, smithsonite, galena, cerrusite, pyromorphite, and other oxidation products, and a gangue of flint and quartz with some dolomite and calcite. The galena and blende are in coarse crystallization. The problem is to save the lead and zinc. The ore is of two classes: (*a*) in which lead predominates, and which contains 75 to 95% galena; (*b*) in which zinc predominates, and which contains 15 to 95% blende. The ore has already been partially concentrated by the process described under Mill 2. The ore is brought from the mines in carts of 4,000 pounds capacity to a receiving yard, where it is inspected, and the lead ore goes to (1) while the zinc ore is dumped into piles graded according to kind. When any grade has accumulated sufficiently for a run it is wheeled to (9).

Mill 16. The Lead Concentrating Mill.

Capacity 30 tons in 10 hours.

1. Twelve receiving bins. By shovel or barrow to (2).

2. From (1), (4), (10), (19), (20), (21), (22), (23), (24), (25). One No. 1 Blake breaker, 6 × 9 inches, crushing to 20 mm. To (3).

3. From (2) and (8). No. 1 bucket elevator. To (4).

4. One No. 1 trommel. Sectional with 2, 5, 10 and 20-mm. holes. Over 20 mm. to (2); through 20 on 10 to (5); through 10 on 5 to (6*a*); through 5 on 2 to (6*b*); through 2 to (7).

5. One No. 1 jig. A 1-sieve accelerated jig. Discharge and hutch to lead smelter; tailings to (8).

6*a* and 6*b*. From (4). One No. 2*a* jig and one No. 2*b* jig. A 4-sieve accelerated jig divided so as to make two 2-sieve jigs. In jig 2*a*, 1st discharge to lead smelter; 2d to (8); hutches to lead smelter; tailings to waste. In jig 2*b*, discharges and hutches to lead smelter; tailings to waste. Here as also in the next jig, the concentrates from the 1st sieves are galena, and those from the 2d sieves are galena and cerrusite.

7. From (4). One No. 3 jig. A 3-sieve Harz jig. 1st discharge and 1st, 2d and 3d hutches to lead smelter; tailings to waste.

8. From (5) and (6*a*). One pair of No. 1 rolls, 18 × 16 inches, set close together. To (3).

Mill 17. The Zinc Concentrating Mill.

Capacity 30 tons in 10 hours.

9. From the yard. Receiving bin. By shovel to (10).

10. Spalling floor, accompanied by hand picking. Clean lead ore to lead

smelter; milling lead ore to (2); clean zinc ore to spelter furnace; milling zinc ore to (11).

11. From (10) and (13). One No. 1 Blake breaker, 6 × 9 inches, crushing to 15 mm. To (12).

12. From (11) and (26). One No. 1 bucket elevator. To (13).

13. One No. 1 trommel with 15-mm. round holes. Oversize to (11); undersize to (14).

14. One No. 2 trommel with 10-mm. round holes. Oversize to (26); undersize to (15).

15. One No. 3 trommel. Sectional with 5 and 7-mm. round holes. Over 7-mm. to (19); through 7 on 5 to (20); through 5 to (16).

16. One No. 4 trommel. Sectional with 2 and 3½-mm. round holes. Over 3½-mm. to (21); through 3½ on 2 to (21); through 2 to (17).

17. One No. 1 hydraulic classifier. Spigot to (22); overflow to (18).

18. One No. 2 hydraulic classifier with 2 spigots. 1st spigot to (23); 2d to (24); overflow to (25).

19. From (15). Two No. 1 jigs. 2-sieve accelerated jigs with two discharges on the 2d sieve. 1st discharge to (2); 2d (upper) to spelter furnace; 2d (lower) to (26); 1st hutch to lead smelter; 2d to spelter furnace; tailings to waste. This and the following jigs yield mixed galena and blende from the first sieves and blende from the later sieves.

20. From (15). One No. 2 jig. A 4-sieve accelerated jig. 1st discharge to (2); 2d and 3d to spelter furnace; 4th to (26); 1st hutch to (2); 2d, 3d and 4th to spelter furnace; tailings to waste.

21. From (16). One No. 3 jig. A 4-sieve accelerated jig. Part of the time it treats stuff through 5 on 3½ mm. and part of the time stuff through 3½ on 2 mm.; a little catch bin holds the stuff that is waiting. Products like (20).

22. From (17). One No. 4 jig. A 4-sieve Harz jig. Products like (20).

23. From (18). One No. 5 jig. A 4-sieve Harz jig. Products like (20).

24. From (18). One No. 6 jig. A 4-sieve Harz jig. 1st hutch to (2); 2d, 3d and 4th hutches to spelter furnace; tailings to waste.

25. From (18). One No. 7 jig. A 3-sieve Harz jig. 1st hutch to (2); 2d and 3d hutches to spelter furnace; tailings to waste.

26. From (14), (19), (20), (21), (22), (23). One pair of No. 2 rolls, 20 × 14 inches, set close together. To (12).

The power for both mills is furnished by a boiler 20 feet long, 70 inches in diameter, with 71 tubes 4 inches in diameter, running under a pressure of 80 pounds per square inch and burning 3 tons of coal per 10 hours; and an engine with cylinder 12 × 24 inches, making 80 revolutions per minute, cutting off at ¼ stroke and indicating 45 horse power.

The water is derived from an artesian well 876 feet deep and is lifted by a lift pump with steam cylinder 12 inches in diameter, bucket 10 inches in diameter and a stroke of 4 feet, 15 to 20 strokes per minute. The capacity of this pump is 403,695 gallons in 10 hours. There is also a 1½-inch centrifugal pump for repumping, with a capacity of 60,000 gallons in 10 hours.

The ore coming to the mills contains 75 to 95% galena in the lead ore and 15 to 95% blende in the zinc ore. The concentrates of both mills contain from 90 to 100% of the metal bearing mineral. The tailings of Mill 16 contain 5% lead and those of Mill 17 contain 3% zinc.

§ 672. MILL No. 18. MINNIE AND A. Y. MILL, LEADVILLE, COLORADO.—Capacity 95 tons per 24 hours. The mill runs 24 hours per day, seven days per week. The ore consists of the economic minerals argentiferous galena, pyrite and blende and a gangue of quartz. The blende is severed fairly well

from the galena by crushing and the problem is to make: (1) a galena-pyrite product, rich in lead and silver and low in zinc, (2) a blende product, low in silver and (3) waste gangue. The ore is hoisted from the mine, wheeled in cars holding 2,000 pounds and dumped to (1).

1. Receiving bin with hopper bottom, holding 75 tons. By gate and chute to (2).
2. One No. 1 Blake breaker, 7 × 10 inches, crushing to 1½ inches. To (3).
3. From (2) and (5). No. 1 bucket elevator. To (4).
4. One No. 1 trommel with 0.14-inch square holes. Oversize to (5); undersize to (6).
5. One pair of No. 1 rolls, 36 × 14 inches, set ¼ inch apart. To (3).
6. From (4). One No. 2 trommel with 6-mesh square holes. Oversize to (12); undersize to (7).
7. One No. 3 trommel with 1.5-mm. square holes. Oversize to (13); undersize to (8).
8. One No. 4 trommel with 1.27-mm. square holes. Oversize to (14); undersize to (9).
9. One No. 1 hydraulic classifier with 2 pockets. Two spigots of 1st pocket to (15); spigot of 2d pocket to (16); overflow to (10).
10. One No. 1 whole current box classifier. Spigot to (17); overflow to (11).
11. One No. 1 settling tank, outside the building, run until nearly full of sediment and then cleaned out. Settlings to (18); overflow to (19).
12. From (6). Two No. 1 jigs. 4-sieve Harz jigs. Hutches to (18); tailings to (19).
13. From (7). Two No. 2 jigs. 4-sieve Harz jigs. Product like (12).
14. From (8). Two No. 3 jigs. 4-sieve Harz jigs. Products like (12).
15. From (9). Two No. 4 jigs. 4-sieve Harz jigs. Products like (12).
16. From (9). One No. 5 jig. A 4-sieve Harz jig. Products like (12).
17. From (10). Two 4-foot Frue vanners. Heads to (18); tailings to (19).
18. From (11), (12), (13), (14), (15), (16), (17). The concentrates are shoveled from the settling boxes beneath the machines and wheeled to the bins for concentrates to be shipped to the smelter.
19. From (11), (12), (13), (14), (15), (16), (17). The tailings are carried away in the tailings launder to the dump where they are kept for their prospective value in lead, silver and zinc.

The labor required is 10 men per 24 hours or 5 men per shift: 2 foremen, 2 breakermen, 2 jig men, 2 vanner men and 2 engineers. Wages range from $3 per shift for laborers up to $4 and $5 for foremen. Board costs $1 per day.

Power is furnished by a 100-horse power Babcock and Wilcox boiler, running under a pressure of 90 pounds per square inch, and burning 1¼ tons of coal in 24 hours; and a 60-horse power Buckeye engine. The mill requires 19½ horse power.

The mine ore contains 10 to 15% lead and 18 to 28% zinc. One hundred tons of ore containing 10% lead and 22 to 28% zinc should yield either 33 tons of concentrates containing 30% lead and 12% zinc, or 50 tons containing 20% lead and 15% zinc. One hundred tons of ore containing 15% lead and 18 to 22% zinc yield 50 tons of concentrates containing 30% lead and 12% zinc.

It will be noted that this mill as above described only partially solves the problem, making two products instead of three. Recently they have installed some Bartlett tables and they are said not only to do better work than the jigs but also to make the three clean products.

§ 673. MILL NO. 19. MOYER MILL, LEADVILLE, COLORADO.—Capacity 200 tons in 24 hours. The mill runs 24 hours per day, seven days per week. The ore consists of the economic minerals argentiferous galena, pyrite, and blende

and a gangue of quartz. The problem is the same as in Mill 18. The ore is hoisted in skips and dumped to (1).

1. Receiving bin. By gate and chute to (2).

2. A stationary picking table. Galena to lead smelter; blende stored for future value; residue to (3).

3. One No. 1 Blake breaker, 9 × 11 inches, crushing to 1½ inches. To (4).

4. One pair of No. 1 rolls, 36 × 14 inches. By No. 1 bucket elevator to (5).

5. From (4) and (6). One No. 1 trommel with 3-mesh square holes. Oversize to (6); undersize to (7).

6. One pair of No. 2 rolls, 36 × 14 inches. By No. 2 bucket elevator to (5).

7. From (5). One No. 2 trommel with 5-mesh square holes. Oversize to (13); undersize to (8).

8. One No. 3 trommel with 8-mesh square holes. Oversize to (14); undersize to (9).

9. One No. 4 trommel with 10-mesh square holes. Oversize to (15); undersize to (10).

10. One No. 1 hydraulic classifier with 3 sets of spigots. 1st spigots to (16); 2d to (17); 3d to (18); overflow to (11).

11. One No. 1 whole current box classifier. Spigots to (19); overflow to (12).

12. No. 1 settling tank, outside the building, run until nearly full of sediment, and then cleaned out. Settlings to lead smelter; overflow to waste.

13. From (7). Two No. 1 jigs. 3-sieve Harz jigs. Hutches to lead smelter; tailings to waste dump.

14. From (8). Two No. 2 jigs. 3-sieve Harz jigs. Products like (13).

15. From (9). Two No. 3 jigs. 4-sieve Harz jigs. Products like (13).

16. From (10). Two No. 4 jigs. One 4-sieve and one 3-sieve Harz jig. Products like (13).

17. From (10). Two No. 5 jigs. 4-sieve Harz jigs. Products like (13).

18. From (10). One No. 6 jig. A 3-sieve Harz jig. Products like (13).

19. From (11). Two 4-foot Frue vanners. Heads to lead smelter; tailings to waste dump.

As in Mill 18, the tailings are all kept for their prospective value.

§ 674. VIEILLE MONTAGNE COMPANY, ÅMMEBERG AND JOHANNESBORG, PROVINCE OF NERIKE, SWEDEN.[103]—Capacity 165 tons in 16 hours. The mill is run 16 hours per day. The ore consists of the economic minerals blende, pyrite and galena in very fine crystallization and a gangue of fine grained gray gneiss. The problem is to save the galena and blende, and separate them from one another. There are three mills: the rock house at the mine, the main mill at Åmmeberg, 8 miles distant by railroad, and the mill for rich galena ore at Johannesborg, 3 miles from Åmmeberg.

Rock House.

The ore hoisted from the mine goes to (1).

1. Rough hand picking. Barren rock to waste; residue to (2).

2. Breakers. To (3).

3. No. 1 trommels with 20-mm. holes. Oversize to (4); undersize to (8).

4. No. 1 revolving picking tables. Blende (7,000 tons per year) to (7); barren rock (over 7,000 tons per year) to waste; residue to (5).

5. No. 2 revolving picking tables. Stuff with blende and considerable galena to (41); stuff with blende and little or no galena to (6).

6. Calcining kilns. Ore is fed in alternate layers with coal. This makes the

gangue soft for crushing, and the pyrite porous and lighter for the separation. To (20).

Ammeberg Mill.

7. From (4). Breaker and No. 1 rolls. To smelter.

8. From (3). Hand feeding and hand picking. Chips, rags, etc., to waste; a little blende to smelter; a little barren rock to waste; residue to (9).

9. No. 2 trommel having 2½ and 5-mm. holes. Over 5 mm. to (10); through 5 on 2½ mm. to (16); through 2½ mm. to (11).

10. No. 3 trommel having 8, 13 and 20-mm. holes. Over 20 mm. to (12); through 20 on 13 to (13); through 13 on 8 to (14); through 8 to (15).

11. From (9). No. 1 hydraulic classifier with 2 spigots. 1st spigot to (17); 2d to (18); overflow to (34).

12. From (10). Hand picking. Blende to smelter; barren rock to waste; residue to (20).

13. From (10). No. 1 jigs. Intermittent 1-sieve Harz jigs. Top skimmings to waste; 2d skimmings to (20); 3d or bottom skimmings (blende) to smelter; if galena is present a fourth skimmings (blende and galena) to (20).

14. From (10). No. 2 jigs. Intermittent 1-sieve Harz jigs. Products like (13).

15. From (10). No. 3 jig. A 3-sieve Harz jig. 1st sieve (blende) to smelter or, if galena present, to (20); 2d sieve (blende) to smelter; 3d sieve to (20); tailings to waste.

16. From (9). No. 4 jig. A 3-sieve Harz jig. Products like (15).

17. From (11). No. 5 jig. A 3-sieve Harz jig. 1st sieve (galena and blende) to (19); 2d and 3d sieves (blende) to smelter; tailings to (30).

18. From (11). No. 6 jig. A 3-sieve Harz jig. Products like (17).

19. From (17) and (18). No. 7 jig. A 3-sieve Harz jig. 1st sieve (galena) to smelter; 2d sieve (if blende) to smelter, or (if blende and a little galena) to (30), or (if blende with much galena) returned to same jig; 3d sieve (blende) to smelter.

20. From (6), (12), (13), (14), (15), (16) and (21). No. 2 rolls, 51 inches in diameter. To (21).

21. A combination sand wheel and trommel with 6-mm. holes. Oversize to (20); undersize by screw conveyor to (22).

22. No. 4 trommel with 2½-mm. holes. Oversize to (23); undersize to (27).

23. No. 3 rolls, 51 inches in diameter, crushing to 2½ mm. To (24).

24. No. 2 hydraulic classifier. Spigot by elevator to (25); overflow to (34).

25. Two No. 5 trommels having 1, 1.4, 2 and 2.5-mm. holes. To (26).

26. No. 8 to No. 12 jigs. 3-sieve Harz jigs treating the 5 products from (25). 1st sieve (galena and blende) to (30); 2d and 3d sieves (blende) to smelter; tailings to (30).

27. From (22). No. 3 hydraulic classifier. Spigot by conveyor to (28); overflow to (34).

28. No. 6 trommel having 1, 1¼, 1½ and 2-mm. holes. To (29).

29. No. 13 to No. 17 jigs. 4-sieve Harz jigs treating the 5 products from (28). 1st sieve (galena and blende) to (30); 2d and 3d sieves (blende) to smelter; 4th sieve to (30); tailings to waste or sometimes, if rich, to (30).

30. From (17), (18), (19), (26), (29), (33) and (37). Schwartzmann mills and Heberli mills. To (31).

31. No. 4 hydraulic classifier. Spigot to (32); overflow to (34).

32. No. 7 trommel having 1, 1.2, 1.4 and 2-mm. holes. To (33).

33. No. 18 to No. 22 jigs. Harz jigs treating the products from (32). Products like (26) and (29).

34. From (11), (24), (27), and (31). No. 1 pointed boxes. Spigots to (37); overflow to (35).

35. From (34) and (39). *Spitzlutten.* Spigots to (38); overflow to (36).

36. No. 2 pointed boxes. Spigots to (39); overflow to waste.

37. From (34). No. 23 jigs. Exact disposition of products unknown, but they probably yield galena to smelter, blende to smelter, middlings to (30) and tailings to waste.

38. From (35) and (39). 21 double Rittinger tables. Exact disposition of products unknown, but they probably yield galena to smelter, blende to smelter, middlings re-treated on similar tables and tailings to waste.

39. From (36). 2-deck revolving slime tables. The upper deck is convex, 4.5 m. in diameter; the lower deck is concave, 4 m. in diameter. All stuff is fed to lower deck which yields 1st heads (galena and blende) to (38); 2d heads (blende) to smelter; middlings to (35); tailings to upper deck. The upper deck yields heads (blende) to smelter, or if fine to (40); middlings returned to same table; tailings to waste.

40. Bumping tables. Heads (blende) to smelter; tailings probably sent back to some earlier machine.

The labor required is over 70 men in and around the mill.

The power is furnished by two water wheels, and one auxiliary steam engine.

The ore coming to the mill averages about 20% zinc and somewhat less than 1% lead. The mill saves 79% of the values which is very good considering the unfavorable character of the ore.

The points to be noticed in the mill are: (1) that hydraulic classifiers are placed before trommels, and that very close sizing is practiced, (2) that a large part of the concentrates are obtained at a high expense, (3) that the concentration of the blende has been carried beyond the ordinary limits of economy. This last is due to the extra purity of the Åmmeberg blende which gives it a higher value. This mill also illustrates the process of roasting for porosity by the calcining kilns (6). The pyrite is thereby rendered light enough to go into the tailings with the gangue.

Johannesborg Mill.

41. From (5). This is similar to the Åmmeberg mill, but much smaller, the capacity being about 3,000 tons per year.

§ 675. MILL NO. 20. OLD JORDAN AND GALENA MINING COMPANY, BINGHAM, UTAH.—Capacity 175 tons in 24 hours. The mill runs 24 hours per day, 7 days per week. The ore is in two classes: Class I., consisting of the economic mineral pyrite and a gangue of quartz and decomposed porphyry; Class II., consisting of the economic minerals pyrite, galena and blende and a gangue of quartz and decomposed porphyry. In both classes the economic minerals carry a little gold and silver. The problem in I. is to save the pyrite, and in II. to save the galena and pyrite. Both classes are treated separately in the same mill. The ore is brought in cars holding 2,200 pounds to (1).

1. One No. 1 grizzly with 1½-inch spaces. Oversize to (4); undersize to (2).

2. No. 1 or receiving bin holding about 400 tons. By No. 1 automatic feeder to (3).

3. From (2) and (4). One No. 1 trommel with 0.25-inch square holes. Oversize to (5); undersize to (7).

4. From (1). One No. 1 Blake breaker, 8 × 10 inches, crushing to 1½ inches. By No. 1 automatic feeder to (3).

5. From (3). One pair of No. 1 rolls, 24 × 12 inches, set ½ inch apart. To (6).

6. From (5) and (8). One No. 1 bucket elevator. To (7).

7. From (3) and (6). One No. 2 trommel with 0.25-inch square holes. Oversize to (8); undersize to (9).

8. One pair of No. 2 rolls, 24 × 12 inches, set ¼ inch apart. To (6).

9. From (7). One No. 3 trommel with 0.145-inch square holes. Oversize to (14); undersize to (10).

10. One No. 4 trommel with 0.108-inch square holes. Oversize to (15); undersize to (11).

11. One No. 5 trommel with 0.06-inch square holes. Oversize to (16); undersize to (12).

12. One No. 1 hydraulic classifier. Spigot to (17); overflow to (13).

13. Distributing trough with 3 spigots. Spigots separately to (18); overflow to (25).

14. From (9). Two No. 1 jigs. 3-sieve Harz jigs. 1st and 2d hutches by car to (24); 3d hutch by barrow to (19); tailings, very little in quantity, to (26).

15. From (10). Two No. 2 jigs. 3-sieve Harz jigs. Products like (14).

16. From (11). Two No. 3 jigs. 3-sieve Harz jigs. Products like (14).

17. From (12). Two No. 4 jigs. 3-sieve Harz jigs. Hutches by car to (24); tailings to (25).

18. From (13). Three 4-foot Frue vanners. Each treats one spigot from (13). Heads to (24); tailings to (25).

19. From (14), (15), (16). No. 2 or middlings bin. To (20).

20. From (19) and (22). One No. 2 bucket elevator. To (21).

21. One pair of No. 3 rolls, 16 × 9 inches, set close together. To (22).

22. One No. 6 trommel with 0.06-inch square holes. Oversize to (20); undersize to (23).

23. Two No. 5 jigs. 2-sieve Harz jigs. Hutches to (24); tailings to (25).

24. From (14), (15), (16), (17), (18), (23). Concentrates house. After draining they go by chute to tram cars and thence 2 miles to the railroad to be shipped to smelter.

25. From (13), (17), (18), (23). Tailings launder to creek.

26. From (14), (15), (16). Tailings launder to (27).

27. Two settling tanks holding about 400 cubic feet each. Settlings sluiced out periodically to waste; overflow to (28).

28. A Knowles compound condensing pump lifting 40 feet to tank at top of mill.

The labor required is 13 men per 24 hours, divided into 2 shifts: 1 foreman, 2 engineers, 4 breakermen, 2 jig men, 2 vanner men and 2 other men. Wages range from $2.25 per day for laborers up to $5 for the foreman. Board costs $30 per month, and coal $5.50 per ton.

Power is furnished by two boilers 16 feet long, 60 inches in diameter, with 54 tubes 3½ inches in diameter, running under a pressure of 65 pounds per square inch, and burning 4,900 pounds of coal per day; and an engine with cylinder 14 × 22 inches, making 74 revolutions per minute, with a 3½-inch Nordberg governor, and developing 16 to 27 indicated horse power.

The mill receives 65 gallons of water per minute from the mine, and 90 to 100 gallons are repumped from (28).

One hundred tons of pyrite ore yield about 33 tons of concentrates containing about 90% of the gold and silver, and 80 to 85% of the iron. One hundred tons of galena ore yield about 50 tons of concentrates containing about 85% of the lead, 68% of the silver and 76% of the gold.

Analyses of both classes of ore and the products were as follows:

	Class I., or Pyrite Ore.			Class II., or Galena Ore.		
	Ore.	Concentrates.	Tailings.	Ore.	Concentrates.	Tailings.
Percent lead	0	0	0	14	25	0.5 to 2
Ounces silver per ton	2.75	5.0	0.5	7.18	10.0	1.0
Ounces gold per ton	0.10	0.18	0.02	0.06	0.12	0.03
Percent zinc	0	0	0	17	7.5	(a)
Percent iron	28	42.5	(a)	(a)	26	(a)
Percent silica	30	3.5 to 5	75 to 90	35	5	(a)

(a) Not determined.

Note the careful graded crushing which the ore receives in this mill by means of the breaker and two pairs of rolls together with the grizzly and No. 1 and No. 2 trommels.

§ 676. MILL NO. 21. SILVER AGE MILL, IDAHO SPRINGS, COLORADO.—Capacity 40 to 50 tons in 24 hours. The mill runs 24 hours per day, six days per week. It is a custom mill treating ore from the following mines: Silver Age, Gem, Gem Extension, Crown Point, Lake, Bullion, Freeland, German, Minot and Brighton. These ores all contain some of the following economic minerals in both coarse and fine crystallization, and carrying gold and silver: pyrite, galena, tetrahedrite, chalcopyrite and blende. The gangue is quartz and feldspar. The problem is to save the gold and silver, and in some cases the copper, the lead or the iron, this last being sold as a flux. The ore is brought in carts holding 5 tons each, or in railroad cars and shoveled to (1).

1. Receiving floor. By barrows to (2).
2. One No. 1 Blake breaker, 7 × 10 inches, crushing to 1 inch. To (3).
3. One pair of No. 1 rolls, 27 × 14 inches, set ¼ inch apart. To (4).
4. From (3) and (6). No. 1 bucket elevator. To (5).
5. One No. 1 trommel with 0.18-inch square holes. Oversize to (6); undersize to (7).
6. One pair of No. 2 rolls, 24 × 14 inches, set close together. To (4).
7. From (5). One No. 2 trommel with 0.14-inch square holes. Oversize to (10); undersize to (8).
8. One No. 3 trommel with 0.048-inch square holes. Oversize to (11); undersize to (9).
9. One No. 1 hydraulic classifier with 3 spigots. 1st spigot to (12); 2d to (13); 3d to (20); overflow to (21).
10. From (7). One No. 1 jig. A 3-sieve Harz jig. 1st and 2d hutches to (22); 3d to (14) or (22); tailings to (14).
11. From (8). One No. 2 jig. A 4-sieve Harz jig. 1st, 2d and 3d hutches to (22); 4th to (14) or (22); tailings to (14).
12. From (9). One No. 3 jig. A 4-sieve Harz jig. Products like (11).
13. From (9). One No. 4 jig. A 4-sieve Harz jig. Products like (11).
14. From (10), (11), (12), (13). One No. 1 unwatering box. Spigot to (15); overflow to (21).
15. From (14) and (20). No. 2 bucket elevator. To (16).
16. Two 3½-foot Huntington mills using screens with ⅜ × $\frac{1}{40}$-inch slots. To (17).
17. One No. 2 hydraulic classifier with 1 spigot. One-half of spigot to (18); other half to (19); overflow to (20).
18. One No. 5 jig. A 4-sieve Harz jig. Hutches to (22); tailings to (21).
19. From (17). One No. 6 jig. A 2-sieve Harz jig. Hutches to (22); tailings to (21).
20. From (9) and (17). One convex stationary slime table. Heads to (22); middlings to (15); tailings to (21).

21. From (9), (14), (18), (19) and (20). Tailings launder to waste.

22. From (10), (11), (12), (13), (18), (19) and (20). Bins for concentrates. The various products are brought to these by barrows, and are loaded by shovel upon cars.

The labor required is 7 men per 24 hours. Wages vary from $2.25 per day for laborers to $3 for mill hands. Board costs $5 per week, lignite coal $3.25 per ton and wood $4.50 per cord.

Power is furnished from a Leffel turbine wheel, 30½ inches in diameter, rated at 44½ horse power, running at 150 revolutions per minute, under a head of 18 feet and using 1,545 cubic feet of water per minute, which is brought 1,500 feet by a flume 4 × 6 feet in section.

One hundred tons of ore yield 12 to 20 tons of concentrates from jigs Nos. 1 to 4, 5 to 8 tons from jigs Nos. 5 and 6, and 3 to 5 tons from the slime table; also 4 to 3 tons of tailings from overflow of hydraulic classifier, 48 to 40 tons from jigs Nos. 5 and 6 and 28 to 23 tons from the slime table.

The ores vary very much in value so that the concentrates may run from practically nothing up to 5 or 6 ounces gold per ton and 30 ounces silver. The following assays show the results of work on one particular lot of ore.

	Ounces Silver per Ton.	Ounces Gold per Ton.		Ounces Silver per Ton.	Ounces Gold per Ton.
Jig No. 1.			Jig No. 4.		
1st hutch	4.40	0.80	(No record.)		
2d "	3.70	0.85	Jig No. 5.		
3d "	3.80	0.40	1st hutch	3.10	0.75
Tailings	1.30	0.18	2d "	2.80	0.75
Jig No 2.			3d "	3.40	0.60
1st hutch	2.90	0.85	4th "	4.00	0.55
2d "	4.20	0.82	Tailings	0.60	0.08
3d "	4.00	1.15	Jig No. 6.		
4th "	4.20	1.00	1st hutch	2.90	0.60
Tailings	1.70	0.25	2d "	4.00	0.50
Jig No. 3.			Tailings	0.90	0.05
1st hutch	4.20	1.30	Slime table.		
2d "	4.00	1.02	Heads	4.10	0.55
3d "	5.10	0.97	Tailings	1.00	0.04
4th "	4.20	0.77			
Tailings	1.90	0.15			

(*e*) COMPLEX JIGGING MILLS CONCENTRATING GALENA, WITH OR WITHOUT PYRITE, FROM LIMESTONE AND QUARTZ IN SOUTHWESTERN MISSOURI.

§ 677. This group includes Mills 22, 23, 24 and 25. They all crush by breaker and rolls. Mills 22, 23 and 24 concentrate by trommels and classifiers followed by jigs and tables. Mill 25 concentrates by roughing jigs and classifiers followed by trunking machine, finishing jigs and tables.

Mill 22 sets aside the coarsest poorest middling product as tailings to be treated at some future time, because the re-treatment nets less profit than working fresh ore; the richer middlings are recrushed by auxiliary rolls and sent back into the system. This mill settles its slimes by a box classifier (Rittinger *spitzgerinne*) and concentrates them by slime tables. Mill 24 recrushes and washes all middlings by sending them back into the system. The slimes pass through a series of box classifiers to the slime tables. The last overflow goes to settling tanks at the end of the series. Mill 25 recrushes its middlings by auxiliary rolls, and washes them by auxiliary classifiers, jigs, and bumping tables. The slimes are settled on their way to the Parsons tables. All slime bearing overflows of water, preparatory to using the water over again, go through clarifying reservoirs, which yield a sediment carrying 6% lead. This is reported as too fine to concentrate, and too poor to smelt, and it is therefore sluiced away. This

mill lies between the simple jigging plants as Mill 10, and complex jigging plants as Mill 22. It begins concentrating upon unsized and unclassified material, but all its later treatment is aided by classifiers. In regard to this system the tailings of the No. 1 or roughing jigs contain grains of included galena and grains of fine floating galena. In other mills both of these classes of grains have more chances to be saved than they do here.

The use of an intermediary jig between the last trommel and the first classifier occurs in two mills of this group, Mill 23, jig No. 4, and Mill 24, jig No. 1.

§ 678. MILL NO. 22. CENTRAL LEAD COMPANY, FLAT RIVER, ST. FRANCOIS COUNTY, MISSOURI.—Figs. 512*a*-512*d* give a general idea of the mill, although the machines are arranged somewhat differently than in the later scheme given below. Capacity 175 tons in 24 hours. The mill runs 24 hours per day, 6 days per week. The ore consists of the economic minerals galena in coarse and fine crystallization, and a little finely disseminated pyrite and a gangue of limestone. The problem is to save the lead. The ore is hoisted in a car holding 1,500 pounds and dumped upon (1).

1. One No. 1 grizzly with 1-inch spaces. Oversize to (2); undersize to (3).
2. Two No. 1 Dodge breakers, 8 × 16 inches, crushing to 1 inch. To (3).
3. From (1) and (2). Cars with hopper bottoms holding 20,000 pounds each. Pulled by horses 1,500 feet, and used as receiving bins. To (4).
4. No. 1 automatic feeder. A roller feeder with roll 18 inches long, 18 inches diameter on a 2-inch shaft, driven by a sprocket wheel 30 inches in diameter at the rate of 1 revolution in 41 seconds; hopper is 28 × 34 inches, and 30 inches deep. To (5).
5. From (4) and (6). One pair of No. 1 rolls, 30 × 16 inches, set 0.4 inch apart. To (6).
6. From (5) and (22). One No. 1 trommel with 12-mm. round holes. Oversize to (11) or sometimes to (5); undersize to (7).
7. One No. 2 trommel with 6-mm. round holes. Oversize by distributor to (12); undersize to (8).
8. One No. 3 trommel with 3-mm. round holes. Oversize by distributor to (13); undersize to (9).
9. One No. 1 hydraulic classifier with 2 spigots. 1st spigot to (14); 2d to (15); overflow to (10).
10. One No. 1 surface current box classifier with 2 spigots. 1st spigot to (16); 2d to (17); overflow as hydraulic water to (12).
11. From (6). One No. 1 jig. A 3-sieve Harz jig. 1st discharge to (25); 2d and 3d to (23); 1st, 2d and 3d hutch to (12); tailings to (27).
12. From (7) and (11). Four No. 2 jigs. 2-sieve accelerated jigs. 1st discharge to (25); 2d to (23); 1st and 2d hutch to (25); tailings to (27).
13. From (8). Three No. 3 jigs. 2-sieve Harz jigs. Products like (12).
14. From (9). Four No. 4 jigs. 3-sieve Harz jigs. 1st discharge and 1st, 2d and 3d hutch to (25); tailings to (27).
15. From (9). Four No. 5 jigs. 3-sieve Harz jigs. 1st, 2d and 3d hutch to (25); tailings to (27).
16. From (10). One No. 1 convex revolving slime table. This and No. 2 table are on the same shaft forming upper and lower decks respectively. Heads to (18); middlings to (21); tailings to (27).
17. From (10). One No. 2 convex revolving slime table. Products like (16).
18. From (16) and (17). One No. 1 settling tank. Settlings by barrow to (28); overflow to (19).
19. One No. 2 settling tank. Settlings by barrow to (28); overflow to (20).
20. From (19) and (26). One No. 3 settling tank. Settlings by barrow to (24); overflow to (27).

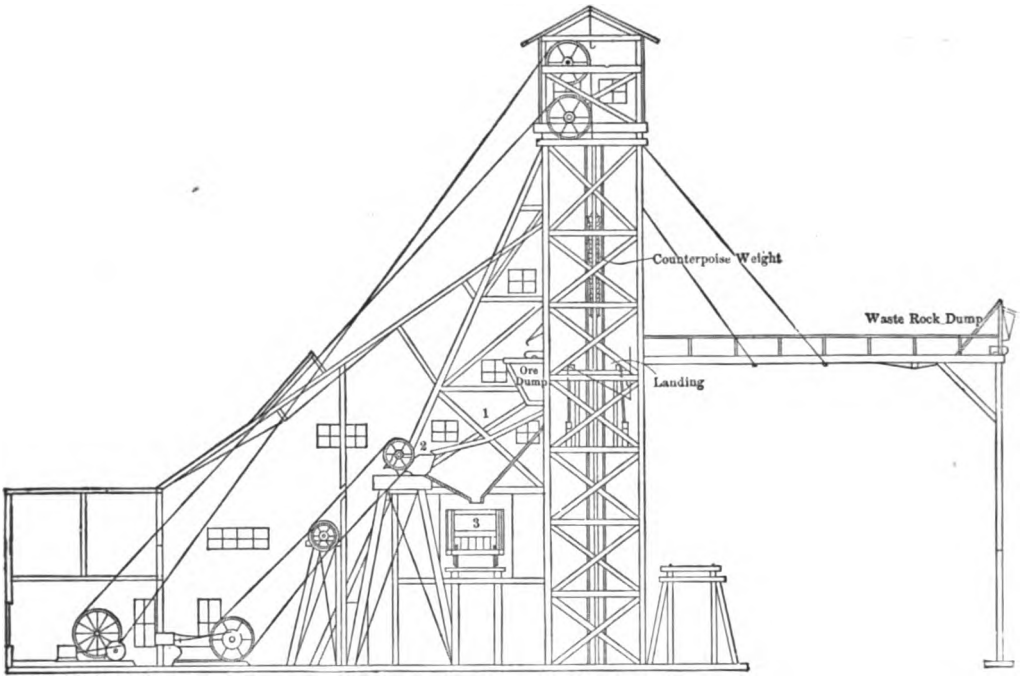

FIG. 512*a*.—SECTION OF HOISTING AND CRUSHING PLANT AT MILL 22.

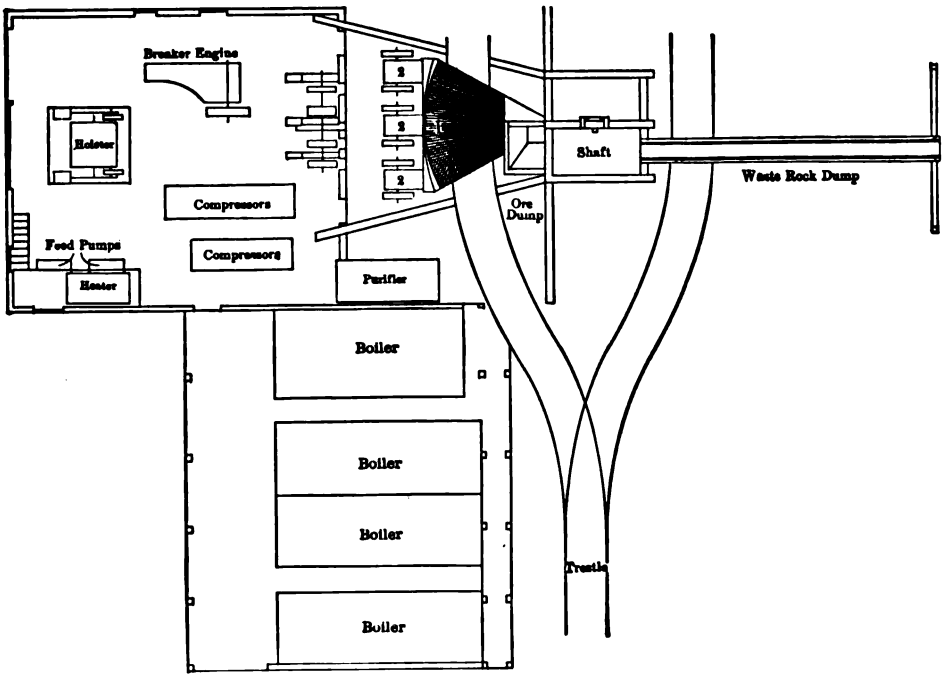

FIG. 512*b*.—PLAN OF HOISTING AND CRUSHING PLANT.

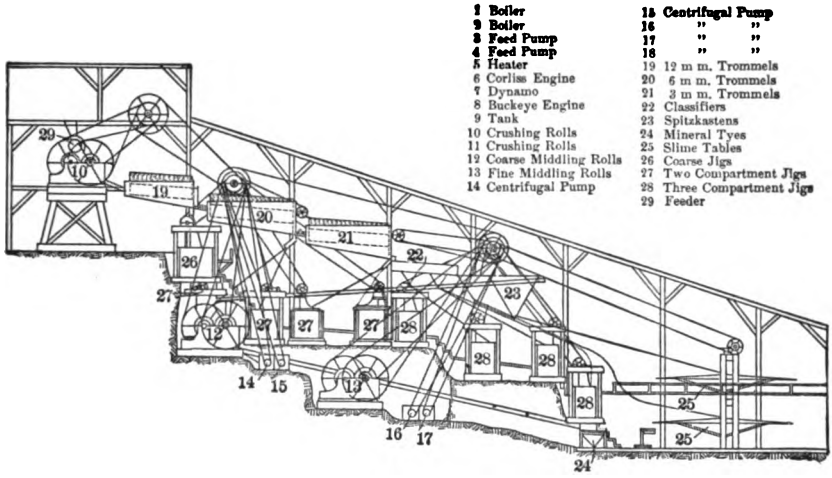

FIG. 512*c*.—SECTION OF MILL 22.

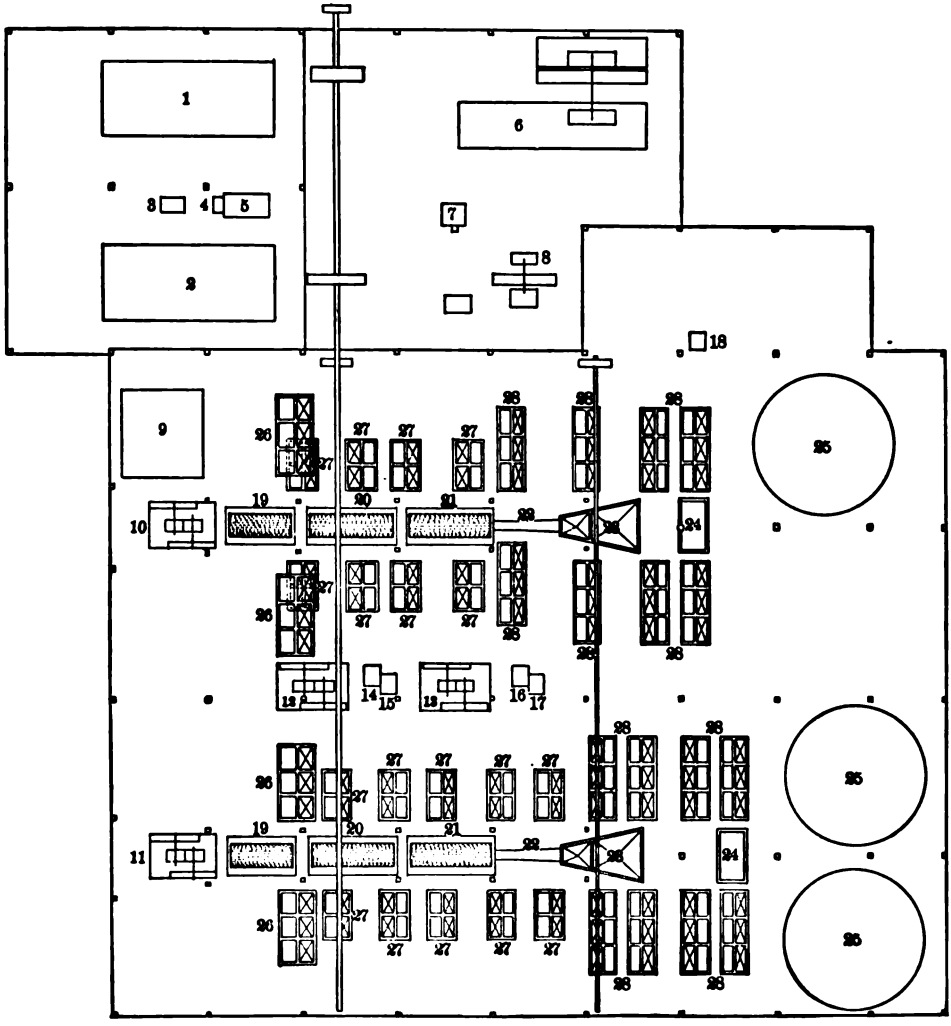

21. From (16) and (17). Unfinished products launder. To (22).
22. From (21), (24) and (26). A centrifugal pump. To (6).
23. From (11), (12) and (13). Middlings launder. To (24).
24. From (20) and (23). One pair of No. 2 rolls, 30 × 16 inches, set close together. To (22).
25. From (11), (12), (13), (14) and (15). Concentrates launder. To (26).
26. One trunking table. Heads to (28); coarse tailings to (22); fine tailings to (20).
27. From (11), (12), (13), (14), (15), (16), (17) and (20). Three tailings launders, two for jig tailings which are dumped by themselves for their prospective value, and one for fine tailings. To waste dump.
28. From (18), (19) and (26). Shipping car. To smelter

The labor required is 16 men per 24 hours divided into 2 shifts: 2 engineers, 2 firemen, 2 shift bosses, 2 roll feeders, 4 jig men, 2 table men and 2 mineral weighers. Wages range from $1.25 to $2 per shift. Board costs $0.50 per day; coal costs $2.25 per ton; wood costs $1.50 per cord.

The power is derived from a boiler 60 inches in diameter, 18 feet long, with tubes 4 inches in diameter, running under a pressure of 100 pounds per square inch, and consuming 5 tons of coal per 24 hours; and a simple Buckeye engine with cylinder 11 × 22 inches, making 145 revolutions per minute, cutting off at ¼ stroke and developing 45 indicated horse power.

The mill receives 75 gallons of water per minute from the mine, and 725 gallons per minute from the river. A Worthington duplex pump with steam cylinder 14 × 10 inches, and water cylinder 10¼ × 10 inches lifts the water 70 feet from the river. Some water is repumped in the mill by the centrifugal pump (22).

The mine ore contains from 5 to 10% lead, and the concentrates contain 65% lead.

§ 679. Mill No. 23. Flat River Lead Company, Flat River, Missouri.—Capacity 100 tons in 24 hours. The mill runs 24 hours per day, six days per week. The ore consists of the economic minerals galena in coarse and fine crystallization and a little finely disseminated pyrite, and a gangue of dolomite. The problem is to save the lead. The ore is hoisted from the mine by skip and dumped upon (1).

1. Receiving floor. Shoveled to (2).
2. One No. 1 Blake breaker, 9 × 15 inches, crushing to 1½ inches. To (3).
3. One pair of No. 1 rolls, 27 × 14 inches. To (4).
4. From (3) and (6). One No. 1 bucket elevator. To (5).
5. One No. 1 trommel with 7-mm. round holes. Oversize to (6); undersize of 1st half to (7); undersize of last half to (12).
6. From (5), (12), (13), (14), (15) and (16). One pair of No 2 rolls, 27 × 14 inches, set close together. To (4).
7. From (5). One No. 2 trommel with 5-mm. round holes. Oversize to (13); undersize to (8).
8. One No. 3 trommel with 3-mm. round holes. Oversize to (14); undersize to (9).
9. One No. 4 or intermediary jig. 1-sieve Harz jig. Discharge and hutch to (19); tailings to (10).
10. One No. 1 hydraulic classifier with 3 spigots. 1st and 2d spigots to (15); 3d to (16); overflow to (11).
11. From (10), (17) and (18). One No. 1 surface current box classifier with 5 spigots. 1st and 2d spigots to (17); 3d, 4th, and 5th to (18); overflow to (20).

12. From (5). One No. 1 jig. 2-sieve Harz jig. 1st discharge to (19); 2d to (6); 1st hutch to (19); 2d to (6); tailings to (20).

13. From (7). Two No. 2 jigs. 2-sieve Harz jigs. Products like (12).

14. From (8). Two No. 3 jigs. 2-sieve Harz jigs. Products like (12).

15. From (10). Two No. 5 jigs. 3-sieve Harz jigs. 1st and 2d hutches to (19); 3d to (6); tailings to (20).

16. From (10). One No. 6 jig. 3-sieve Harz jig. Products like (15).

17. From (11). One No. 1 convex revolving slime table. Heads to (19); middlings by centrifugal pump to (11); tailings to (20).

18. From (11). One No. 2 convex revolving slime table. Products like (17).

19. From (9), (12), (13), (14), (15), (16), (17) and (18). Bins for concentrates. To smelter.

20. From (11), (12), (13), (14), (15), (16), (17) and (18). Tailings launder to waste.

Wages vary from $1 per day for laborers up to $1.50 or $2 for mechanics. Board costs $0.50 per day, coal $2 per ton and wood $0.85 per cord.

The ore contains up to 50% lead and the concentrates contain 74% lead.

§ 680. MILL No. 24. MINE LA MOTTE, MINE LA MOTTE, MISSOURI.—Capacity 100 tons in 22 hours. The mill runs 22 hours per day, six days per week. The ore consists of the economic minerals galena in coarse and fine crystallization and a little finely disseminated pyrite, and a gangue of limestone containing about 20% silica in oölitic grains. The problem is to save the lead. The ore is hand picked in the mine, and one-quarter to one-half of it rejected as waste. The remainder is hauled from ½ to 2½ miles in side dumping cars holding about 3 tons each to (1).

1. Platform elevator lifting 29 feet. The car is dumped over a flap 6½ feet long, 29 inches wide, hinged 33 inches above the floor which drops against the platform of the elevator, and, sloping 30°, serves to guide the ore to (2).

2. Receiving floor. Shoveled to (3).

3. One No. 1 Blake breaker, 9 × 15 inches, crushing to 1½ inches. To (4).

4. One No. 1*a* trommel with 10-mm. round holes. Oversize to (5); undersize to (9).

5. One pair of No. 1 rolls, 28½ × 12 inches, set ⅛ to ½ inch apart. To (9).

6. From (9). One No. 1*b* trommel with 10-mm. round holes. Oversize to (7); undersize to (18).

7. From (6), (18), (19), (20), (21), (31). One No. 1 bucket elevator. To (8).

8. One pair of No. 2 rolls, 30 × 12 inches, set ¼ to $\frac{3}{16}$ inch apart. To (9).

9. From (4), (5) and (8). One No. 2 trommel with 7-mm. round holes. Oversize to (6); undersize to (10).

10. One No. 3 trommel. Sectional with 3-mm. and 5-mm. round holes. Over 5 mm. to (19); through 5 on 3 mm. to (20); through 3 mm. to (11).

11. One No. 1 hydraulic classifier with 2 spigots. 1st spigot to (21); 2d spigot and overflow to (12).

12. One No. 5 or intermediary jig. 1-sieve Harz jig. Hutch to (31); tailings to (13).

13. From (12) and (28). One No. 1 whole current box classifier with 2 spigots. Spigots to (22); overflow to (14).

14. From (13) and (29). One No. 2 whole current box classifier with 4 spigots. 1st spigot to (23); 2d to (24); 3d not used; 4th to (25); overflow to (15).

15. One No. 3 whole current box classifier with 1 spigot and 2 overflows. Spigot to (25); 1st overflow not used; 2d to (16).

16. One No. 4 whole current box classifier with 2 spigots. Spigots to (26); overflow to (17) or (32).

17. From (16) and (30). No. 1 settling tank. Settlings on every alternate day by No. 1 centrifugal pump with 2½-inch discharge pipe to (27); overflow by No. 2 centrifugal pump with 3-inch discharge pipe back to water supply tank.

18. From (6). One No. 1 jig. 2-sieve crank arm accelerated jig. 1st discharge to (31); 2d discharge and 1st and 2d hutches to (7); tailings to (30).

19. From (10). Three No. 2 jigs. 2-sieve crank arm accelerated jigs. Products like (18).

20. From (10). One No. 3 jig. 2-sieve crank arm accelerated jig. Products like (18).

21. From (11). Four No. 4 jigs. 2-sieve Parsons jigs. 1st discharge to (31); 2d to (7); 1st hutch to (31); 2d to (7); tailings to (30).

22. From (13). Four No. 6 jigs. 3-sieve Harz jigs. 1st hutch to (31); 2d to (31) or (28); 3d to (28); tailings to (32).

23. From (14). One No. 1 convex revolving slime table. Heads by barrow to shipping floor; middlings to (29); tailings to (32).

24. From (14). One No. 2 convex revolving slime table. Products like (23).

25. From (14) and (15). One No. 3 convex revolving slime table. Products like (23).

26. From (16). One No. 4 convex revolving slime table. Products like (23).

27. From (17). One 4-foot Frue vanner. Heads by barrow to shipping floor; tailings to (32).

28. From (22) and sweepings of floor. One No. 3 centrifugal pump with 1½-inch discharge pipe. To (13).

29. From (23), (24), (25) and (26). One No. 4 centrifugal pump with 2-inch discharge pipe. To (14).

30. From (18), (19), (20), (21). "Chats" cars. "Chats" or tailings hauled to dump; overflow to (17).

31. From (12), (18), (19), (20), (21), (22). Mineral floor, 10 feet square. Concentrates by barrow to shipping floor and thence by wagon to smelter; drainings to (7).

32. From (16), (22), (23), (24), (25), (26), (27). Tailings launder to creek, and thence to settling pond from which water is pumped back to the mill supply tank by a No. 10 Knowles pump.

The labor required is 23 men per 24 hours, divided into 2 shifts: 2 engineers, 2 firemen, 2 men on platform elevator, 4 breaker men, 2 jig tenders acting also as foremen, 4 table men, 4 tank men and weighers, 1 boy for cleaning, 2 men driving 4 mules for hauling "chats". Wages range from $0.70 per shift for boys up to $1.80 for foremen. Board costs $0.40 per day; coal costs $3 per ton; wood costs $1.75 per cord.

The power is derived from 2 boilers, 48 inches diameter, 20 feet long, each with 10 tubes 6 inches diameter, running under a pressure of 80 pounds per square inch, and burning about 6¼ tons of coal per 24 hours. These boilers run 4 engines in the mill, and also a 6 × 8-inch engine in the machine shop. An engine with cylinder 12 × 20 inches, making 155 revolutions per minute, runs the breaker, rolls, the platform elevator and the bucket elevator. A second engine with cylinder 10 × 12 inches runs all the trommels, all the jigs, the Frue vanner, No. 4 slime table and Nos. 1 and 3 centrifugal pumps. A third engine with cylinder 10 × 12 inches runs Nos. 1, 2 and 3 slime tables, and No. 4 centrifugal pump. A fourth engine with cylinder 7 × 9 inches runs No. 2 centrifugal pump.

The water is brought from a storage reservoir by an 8-inch cast iron pipe 7,100

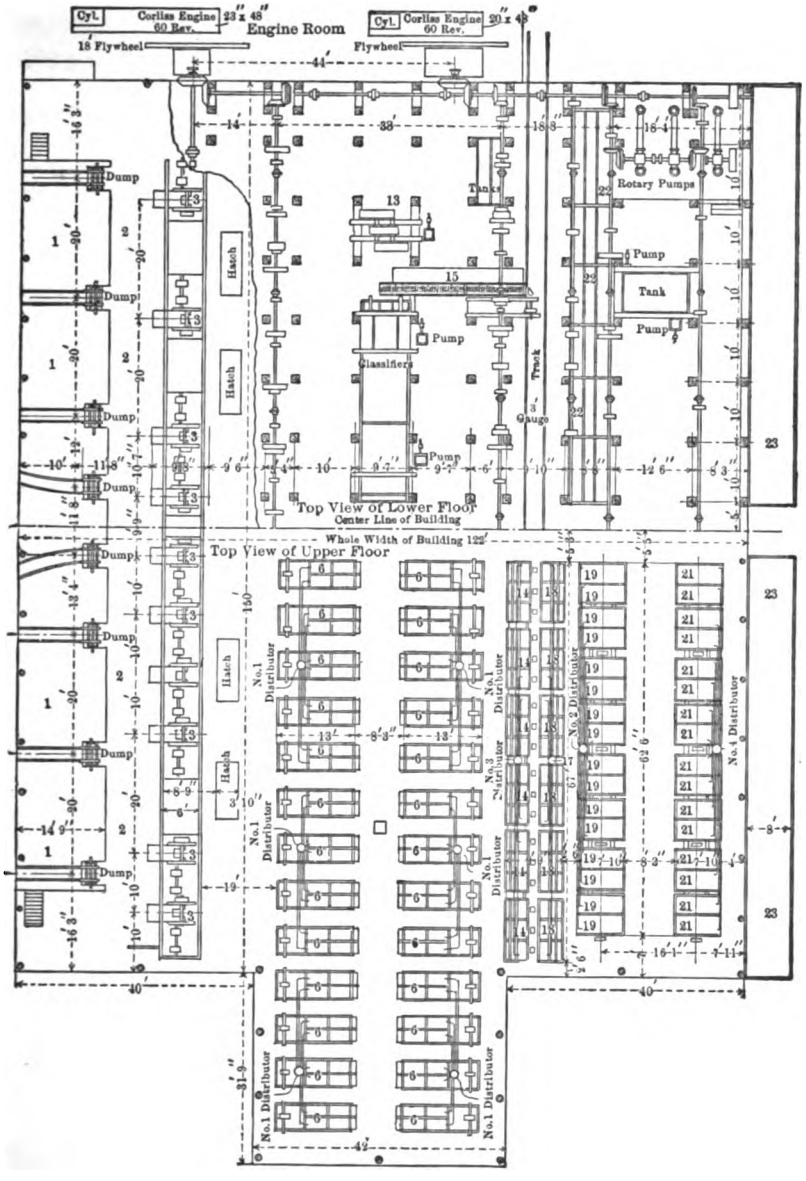

FIG. 513*a*.—PLAN OF MILL 25.

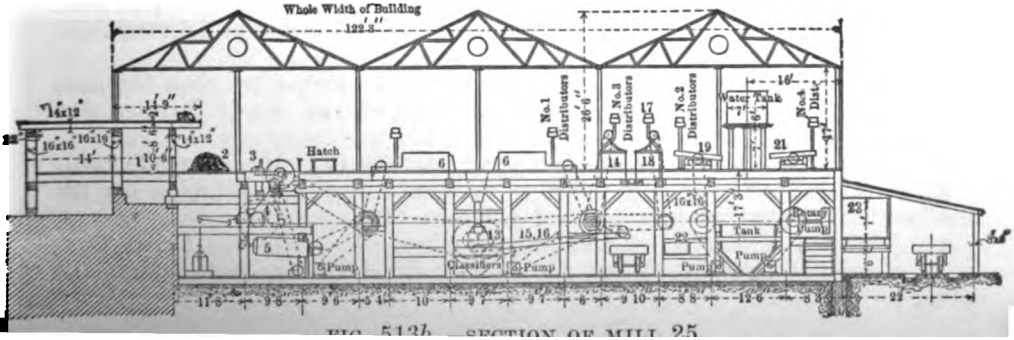

FIG. 513*b*.—SECTION OF MILL 25.

feet long, with 70 feet head, and is delivered into a mill supply tank $11 \times 7\frac{1}{2} \times 6\frac{1}{2}$ feet, under the breaker.

The ore as received at the mill contains 9 to 15% lead and a trace of nickel; the concentrates of the jigs contain about 74% lead, and those of the slime tables and vanner carry 55 to 60% lead; the pyritic concentrates contain 20 to 30% lead and a variable quantity of nickel; the tailings contain $1\frac{1}{2}$ to $1\frac{3}{4}$% lead and a variable quantity of nickel. Of the ore mined, $\frac{1}{4}$ to $\frac{1}{2}$ is picked out as waste in the mine, while the remainder comes to the mill where 100 tons of ore yield about $10\frac{1}{2}$ tons of jig concentrates, $1\frac{1}{2}$ tons of table and vanner concentrates, and 88 tons of tailings. The mill saves 87 to 90% of the total lead in the ore.

This mill shows a rather unusual arrangement of rolls and trommels. The scheme seems to be to crush the middlings as far as possible separately from the original ore, but still not to have entirely separate apparatus for each.

§ 681. MILL No. 25. ST. JOSEPH LEAD COMPANY, BONNE TERRE, MISSOURI. —Figs. 513*a* and 513*b* illustrate this mill except in a few points where changes have been made. Capacity 900 tons in 24 hours. The mill runs 24 hours per day, 6 days per week. The ore consists of the economic minerals galena in coarse and fine crystallization and a little finely disseminated pyrite and a gangue of dolomite. The problem is to save the lead. The ore is hand picked in the mine into waste which is hoisted and hauled to the Mississippi river to be used for filling; and concentrating ore, which is hoisted separately, dumped into cars with hopper bottoms holding 25 tons and hauled by locomotive $\frac{1}{4}$ to 5 miles to (1).

1. Bins with flat bottoms. Shoveled to (2).

2. Spalling floor. To (3).

3. Ten No. 1 Blake breakers, 9×15 inches, crushing to $1\frac{1}{2}$ inches. To (4).

4. From (3) and (5). Ten pairs of No. 1 rolls, 30×14 inches, set close together. To (5).

5. Ten No. 1 trommels with 6-mm. round holes. Oversize by ten No. 1 bucket elevators to (4); undersize by ten No. 1 centrifugal pumps with 4-inch discharge pipes and ten No. 1 Parsons distributors to (6).

6. Ninety No. 1 jigs. 2-sieve Parsons jigs. Skimmings to (13); hutches partly to (7) and partly to (8); tailings to (23).

7. Two No. 1 surface current box classifiers with one spigot each. Spigot to (15); overflow to (8).

8. From (6) and (7). Four No. 2 surface current box classifiers with one spigot each. Spigot to (16); overflow to (9).

9. Two No. 3 surface current box classifiers with one spigot each. Spigot by No. 2 centrifugal pumps to (17); overflow to (10).

10. Two No. 4 surface current box classifiers with one spigot each. Spigot by No. 3 centrifugal pumps to (17); overflow to (11).

11. Two No. 5 surface current box classifiers with one spigot each. Spigot by three No. 2 Parsons distributors to (19); overflow to (12).

12. Two No. 1 unwatering boxes with two spigots each and a 6-inch pipe near the top. Spigots by No. 4 centrifugal pumps to (20); 6-inch pipe delivers water to undersize of (5); overflow to (24).

13. From (6). Two pairs of No. 2 rolls, 30×14 inches, set close together, run alternately. By No. 5 centrifugal pumps and two No. 3 Parsons distributors to (14).

14. Twelve No. 2 jigs. 3-sieve Harz jigs. Hutches to (22); tailings to (23).

15. From (7). One No. 1 trunking machine. Heads to shipping car for smelter; tailings by No. 6 centrifugal pump to (17).

16. From (8). Two No. 2 trunking machines. Products like (15).

17. From (9), (10), (15) and (16). Two No. 4 Parsons distributors. To (18).

18. Twelve No. 3 jigs. 3-sieve Harz jigs. Hutches to (22); tailings to (23).

19. From (11). Forty-eight No. 1 Parsons-Rittinger bumping tables. Heads to (22); middlings to (20); tailings to (23).

20. From (12), (19), (21) and (22). Four No. 1 whole current box classifiers with one spigot each. Spigot by three No. 7 centrifugal pumps and four No. 5 Parsons distributors to (21); overflow to (24).

21. Sixty-four No. 2 Parsons-Rittinger bumping tables. Heads to (22); middlings to (20); tailings to (23).

22. From (14), (18), (19), (21). No. 1 settling tank for concentrates. Settlings shoveled to shipping car for smelter; spigot to (20); overflow to (24).

23. From (6), (14), (18), (19), (21). No. 2 settling tank for tailings. Spigots by car to be used on railroad for ballast and filling; overflow to (24).

24. From (12), (20), (22), (23). Clarifying reservoir. Settlings flushed out periodically; water pumped back to mill supply tank.

The labor required is 61 men per 24 hours: 30 feeders working 8-hour shifts; 16 others working 12-hour shifts; 9 firemen working 8-hour shifts and 6 engineers working 8-hour shifts. Wages vary from $0.75 per shift for boys to $1.25 for laborers and $2.50 for mechanics. Board costs $0.45 per day; coal costs $2 per ton; wood costs $2.10 per cord.

The power is derived from 3 water tube boilers with steam drum 36 inches in diameter, 20 feet long and with 172 tubes 3½ inches in diameter, running under a pressure of 120 pounds per square inch, and burning 32 tons of coal in 24 hours; and two Harris Corliss engines, one with cylinder 23 × 48 inches, and making 60 revolutions per minute, and the other with cylinder 20 × 40 inches, and making 62 revolutions per minute. The engines cut off at ⅝ stroke and develop 450 horse power.

The water in this mill is used over and over, being pumped from the clarifying reservoir by three Wilbraham rotary pumps, size No. 1, making 115 revolutions per minute, and delivering 2,250,000 gallons per 24 hours through a 12¼-inch delivery pipe made of ¼-inch wrought iron plate, to an artificial pond above the mill. This pond has a drainage area of about a square mile which is sufficient for supplying the small amount of water wasted in the mill, and the water necessary for flushing out the clarifying reservoir.

The ore coming to the mill assays about 7% lead and 1% pyrite; the concentrates assay 72% lead; the tailings assay 1.4 to 1.5% lead, but most of the value is in the slimes which when flushed from the reservoir assay 6% lead, but cannot be profitably treated; the hutches of No. 1 jigs assay 20 to 25% lead; the 1st hutches of No. 2 jigs assay 75% lead, and the 3d hutches assay 60%; the heads of the trunking table assay 72 to 75% lead. One hundred tons of ore yield about 8½ tons of concentrates and 91⅝ tons of tailings; of this 100 tons 22 tons reach the trunking machines, the heads of which amount to about 6 tons.

(*f*) COMPLEX JIGGING MILLS CONCENTRATING THE VARIOUS SILVER AND LEAD MINERALS IN COLORADO AND UTAH.

§ 682. This group includes Mills 26, 27, 28 and 29. These all crush by breakers and rolls and concentrate by screens, classifiers, jigs, and slime tables or vanners, or both. They are saving galena with silver bearing minerals. Among the included grains in the middlings is every conceivable mixture, both as to quality and proportions of the component minerals. Mill 26 recrushes middlings by an auxiliary Bryan mill, and washes them by auxiliary vanners. Mill 27 recrushes the coarse middlings by auxiliary rolls, and the fine middlings by auxiliary gravity stamps, the sand and pulp both going back into the system. Mill 28 re-works its middlings by auxiliary rolls, screens, and jigs. This mill is

designed along the lines of German practice, making it the most elaborate mill in the group. Mill 29 makes no middlings except on the slime table.

§ 683. MILL NO. 26. BULLION BECK AND CHAMPION MINING COMPANY, EUREKA, UTAH.—Capacity 200 tons per day. The mill runs 24 hours per day, 7 days per week. The ore consists of the economic minerals galena, cerrusite, malachite, azurite, some silver as sulphide, chloride, arsenite and arseniate, a little gold, some arsenite and arseniate of copper and a gangue of quartz with some limestone. The problem is to save the lead, copper, silver and gold. The ore is hand picked in the mine into (*a*) shipping ore which is hoisted and goes to smelter, (*b*) concentrating ore which is hoisted separately to (1), (*c*) waste which is used for stowing in the mine or hoisted separately and sent to the dump.

1. No. 1 bin holding 200 tons. By gate to hoisting skip holding 2 tons which lifts ore 200 feet vertically or 650 feet on the slope, and dumps it over a chute 10 × 6 feet in size to (2).

2. One No. 1 breaker, a Comet D, crushing to 2½ inches. To (3).

3. One No. 1 trommel with 31.8-mm. round holes. Oversize to (4); undersize to (5).

4. Two No. 2 breakers, Dodge breakers, 11 × 15 inches, crushing to ¾ inch. To (5).

5. From (3) and (4). One No. 2 bin holding 300 tons. By gates and chutes and two No. 1 Tulloch feeders to (6).

6. One pair each of No. 1 and No. 2 rolls, 36 × 16 inches, set ⅛ to $\frac{3}{16}$ inch apart. To (7).

7. From (6) and (9). One No. 1 bucket elevator. To (8).

8. Two No. 2 trommels with 5.7-mm. square holes. Oversize to (9); undersize to (10).

9. One pair of No. 3 rolls, 36 × 16 inches, set close together. To (7).

10. From (8). Two No. 3 trommels with 3.6-mm. square holes. Oversize to (15); undersize to (11).

11. Two No. 4 trommels with 2.1-mm. square holes. Oversize to (16); undersize to (12).

12. Two No. 5 trommels with 1.5-mm. square holes. Oversize to (17); undersize to (13).

13. Two No. 6 trommels with 0.9-mm. square holes. Oversize to (18); undersize to (14).

14. One No. 1 hydraulic classifier with 2 spigots. 1st spigot to (19); 2d to (20); overflow to (25).

15. From (10). Four No. 1 jigs. 3-sieve Harz jigs. 1st hutch to (31); 2d and 3d by barrow to (21); tailings to (27).

16. From (11). Two No. 2 jigs. 3-sieve Harz jigs. Products like (15).

17. From (12). Two No. 3 jigs. 3-sieve Harz jigs. 1st and 2d hutches to (31); 3d by barrow to (21); tailings to (27).

18. From (13). One No. 4 jig. 3-sieve Harz jig. 1st and 2d hutches to (31); 3d by barrow to (21); tailings to (26).

19. From (14). One No. 5 jig. 3-sieve Harz jig. Products like (18).

20. From (14). One No. 6 jig. 2-sieve Harz jig. 1st hutch to (31); 2d by barrow to (21); tailings to (26).

21. From (15), (16), (17), (18), (19), (20). One No. 2 bucket elevator. To (22) either direct or by a bucket conveyor.

22. Three No. 3 or middlings bins each 12 feet long, 14 feet deep and 16, 5 and 16 feet wide, respectively. By gates and chutes and three No. 2 Tulloch feeders to (23).

23. Three 5-foot Bryan mills using a screen with 0.54-mm. square holes. (24).

24. Ten Frue vanners. Heads to (31); tailings to (29).

25. From (14). Five 6-foot Johnston vanners. Heads to (31); tailings to (29).

26. From (18), (19), (20). One No. 1 unwatering box. Spigot to left side of reservoir; overflow to (27).

27. From (15), (16), (17) and (26). Two No. 1 settling tanks used alternately. Settlings removed periodically by gate in bottom to car and hauled to dump; overflow to (28).

28. From (27) and (30). One No. 2 settling tank. Settlings flushed out periodically through gate in bottom to dump; overflow by 2 Knowles duplex pumps to Nos. 3 and 4 water tanks.

29. From (24) and (25). One No. 2 unwatering box. Spigot to right side of reservoir; overflow to (30).

30. One No. 3 settling tank. Settlings flushed out every 24 hours to dump; overflow by centrifugal pump with 3-inch discharge pipe to (28).

31. From (15), (16), (17), (18), (19), (20), (24), (25). Drainage floor for concentrates. By barrow to railroad cars and thence to smelter; drainings to reservoir.

The labor required per 24 hours is 28 men divided into two shifts: 2 men on hoisting skip, 2 firemen, 2 engineers, 2 foremen, 2 jig men, 4 helpers, 3 vanner men, 3 laborers, 4 repair men, 2 roll men, 2 tank men. Wages vary from $2 per day for laborers to $3 or $4 for mechanics. Board costs $20 to $25 per month; slack coal costs $3 per ton; wood costs $5 to $6 per cord.

The power is furnished by 2 boilers 66 inches in diameter, 16 feet long, each with 56 tubes 4 inches in diameter, running under a pressure of 115 pounds per square inch, and burning 6 tons of slack coal per 24 hours; and a simple slide valve engine with cylinder 16 × 36 inches, making 90 revolutions per minute, and yielding 164 indicated horse power. A 50-horse power hoisting engine is used for the hoisting skip.

The mill receives 30 gallons of fresh water per minute, and 80 to 100 gallons per minute are re-pumped. The fresh water costs $10 per 24 hours, and is the same as that of the town of Eureka. It comes by gravity from a reservoir 200 feet long, 60 feet wide, 12 feet deep, and located 1¼ miles distant, and is delivered to No. 1 or pressure tank 10 × 12 × 6 feet deep, which supplies the trommels and hydraulic classifiers, and then overflows to No. 2 water tank 14 × 16 × 14 feet deep. The re-pumped water comes mainly from (28) and goes to No. 3 and No. 4 water tanks, each 10 × 16 × 14 feet deep. These tanks have sediment deposit in them which has to be cleaned out at times. When this happens one is cleaned out at a time, the other doing the whole work. All the drainage from the mill is gathered in a reservoir at the foot of the hill about 600 feet away, settled there, and the clear water drawn off into a tank 36 × 20 × 7 feet deep, and thence pumped back to No. 1 water tank by a Miller duplex pump with a capacity of 100 to 125 gallons per minute. The reservoir has a settling surface of 40,000 square feet, and the banks are kept above the slime deposits by the spigot products of (26) and (29). These are led around the reservoir in V-shaped launders in which are small triangular openings with area of 1 square inch and placed 4 inches apart. By taking out plugs from these holes, the reservoir man can direct the sand to any desired point along the bank of the reservoir.

An approximate analysis of the concentrating ore is as follows: silica (SiO_2) 70%, iron oxide (Fe_2O_3) 3%, lead 7%, copper 0 to 0.5%, sulphur 0.3%, zinc 1 to 2%, arsenic 0.5%, gold about 0.02 ounce per ton, silver 9 ounces per ton, of which 30% is chloride and 70% is sulphide. The concentrates contain about 35% lead, 0.5 to 3.0% copper, 30 ounces of silver per ton, and 0.05 ounce gold per ton. The tailings contain 0.3 to 1.5% lead, a trace of copper, 4.5 to 8.0

ounces silver per ton, and 0.01 to 0.02 ounce gold per ton. The vanner tailings are richer than the jig tailings. Of the ore mined an average of 60% is picked out in the mine as shipping ore, 15% is picked out as waste, and 25% is concentrating ore for the mill. In the mill 100 tons of ore yield 10 to 15 tons of concentrates, and 85 to 90 tons of tailings. The mill saves 75 to 85% of the lead, and about 40% of the silver.

§ 684. MILL NO. 27. REVENUE TUNNEL MINES COMPANY, MOUNT SNEFFLES, OURAY, COLORADO.—See Fig. 514, which shows the mill at an earlier period, and therefore differs from the outline in one or two points. Capacity 120 tons per 24 hours. The mill runs 24 hours per day, 7 days per week. The ore consists of the economic minerals argentiferous galena, tetrahedrite, pyrite, blende, a little chalcopyrite and a gangue of quartz and porphyry. The minerals are mostly in coarse crystallization. The problem is to save the lead, copper and silver, and its accompanying gold without the zinc. The ore comes to the mill in pivoted end dump cars holding 4,000 pounds, and is dumped to (1).

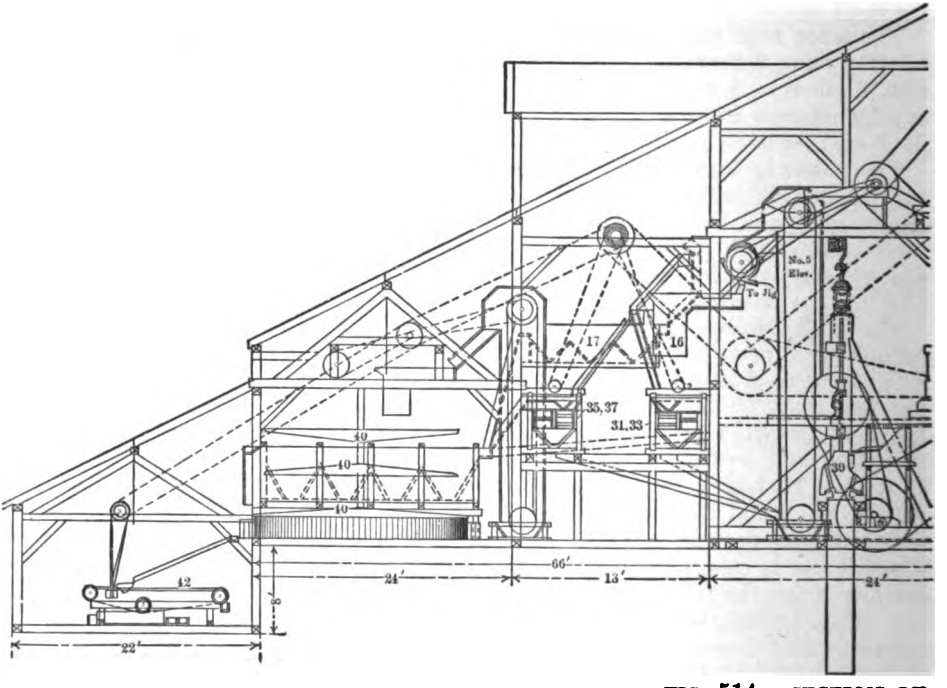

FIG. 514.—SECTION OF.

1. Two No. 1 or receiving bins. Some tetrahedrite is picked off the surface and sent to (3). Ore is drawn from only one bin at a time. By gate to (2).

2. Two No. 1 rectangular picking tables. One used at a time. Tetrahedrite to (3); residue to (4).

3. From (1) and (2). Two No. 2 bins for picked ore. To shipping wagons.

4. From (2). Two No. 1 Blake breakers, 9 × 15 inches, crushing to 1½ inches. Only one run at a time. By two No. 3 bins and two No. 1 Tulloch feeders to (5).

5. Two No. 1 trommels. Only one runs at a time. Each sectional with 15.9, 25.4 and 38.1-mm. round holes. Over 38.1 mm. to (6); through 38.1 on 25.4 mm. to (19); through 25.4 mm. on 15.9 mm. to (20); through 15.9 mm. to (9).

6. From (5), (8), (19) and (20). One No. 1 bucket elevator. To (7).
7. One pair of No. 1 rolls, 36 × 14 inches, set ½ inch apart. To (8).
8. One No. 2 trommel with 15.9-mm. round holes. Oversize to (6); undersize to (9).
9. From (5) and (8). One No. 2 bucket elevator. To (10).
10. One No. 3 trommel with 12.7-mm. round holes. Oversize to (21); undersize to (11).
11. One No. 4 trommel with 10.3-mm. round holes. Oversize to (22); undersize to (12).

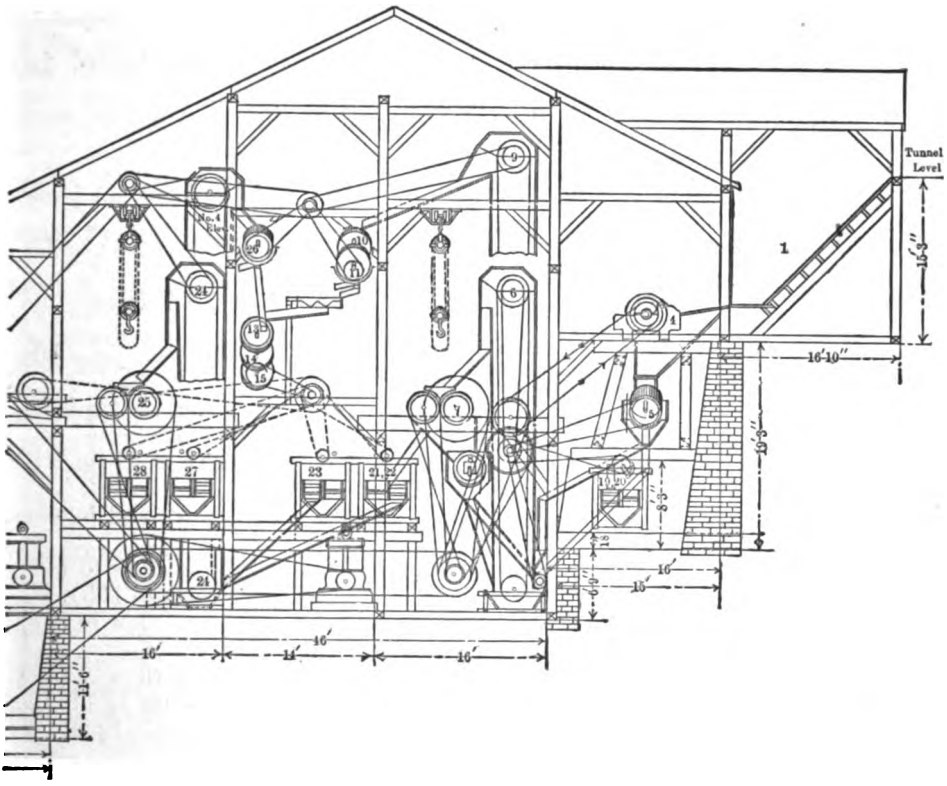

MILL 27.

12. One No. 5 trommel with 8.3-mm. round holes. Oversize to (23); undersize to (13).
13. From (12) and (26). One No. 6 trommel with 4.4-mm. round holes. Oversize to (27); undersize to (14).
14. One No. 7 trommel with 2.8-mm. round holes. Oversize to (28); undersize to (15).
15. One No. 8 trommel with 2-mm. round holes. Oversize to (31); undersize to (16).
16. From (15) and (30). Two No. 1 hydraulic classifiers. Meinecke classi-

fiers with 4 spigots each. 1st spigot to (32); 2d to (34); 3d to (36); 4th not used; overflow to (17).

17. Two No. 1 whole current box classifiers with 4 spigots each. Spigots to (42); overflow to (18).

18. Two No. 2 whole current box classifiers. Spigots to (40); overflow to (44).

19. From (5). One No. 1 jig. 2-sieve crank arm accelerated jig. Discharges and hutches by cars to shipping wagons; tailings to (6).

20. From (5). Two No. 2 jigs. A 2-sieve Harz jig and a 2-sieve crank arm accelerated jig. Products like (19).

21. From (10). One No. 3 jig. A 4-sieve crank arm accelerated jig. Discharges and hutches to (45); tailings to (24).

22. From (11). One No. 4 jig. A 4-sieve crank arm accelerated jig. Products like (21).

23. From (12). Two No. 5 jigs. A 4-sieve Harz jig and a 4-sieve crank arm accelerated jig. Products like (21).

24. From (21), (22), (23). One No. 3 bucket elevator. To (25).

25. From (24) and (26). One pair of No. 2 rolls, 36 × 14 inches, set $\frac{1}{8}$ inch apart. By No. 4 bucket elevator to (26).

26. One No. 9 trommel with 8.3-mm. round holes. Oversize to (25); undersize to (13).

27. From (13). Two No. 6 jigs. 4-sieve Harz jigs. Discharges and hutches to (45); tailings to (29) or (38).

28. From (14). One No. 7 jig. 4-sieve crank arm accelerated jig. Discharges and hutches to (45); tailings to (29).

29. From (27) and (28). Four unwatering sieves with 1-mm. square holes. Oversize by four No. 2 Hendy feeders to (30); undersize to (44).

30. Twenty gravity stamps arranged in four batteries, using a screen with 1-mm. holes. By No. 5 bucket elevator to (16).

31. From (15). One No. 8 jig. 5-sieve Harz jig. Discharges and hutches to (45); tailings to (38).

32. From (16). One No. 1 unwatering box. Spigot to (33); overflow to (44).

33. One No. 9 jig. 5-sieve Harz jig. Hutches to (45); tailings to (38).

34. From (16). One No. 2 unwatering box. Spigot to (35); overflow to (44).

35. One No. 10 jig. 5-sieve Harz jig. Products like (33).

36. From (16). One No. 3 unwatering box. Spigot to (37); overflow to (44).

37. One No. 11 jig. 5-sieve Harz jig. Hutches to (45); tailings to (42).

38. From (27), (31), (33), (35). One No. 4 unwatering box. Spigot by No. 3 Hendy feeder to (39); overflow to (44).

39. One 5-foot Huntington mill using a screen with 1-mm. square holes. To (42).

40. From (18). A 3-deck slime table. Upper deck is concave revolving, middle is convex revolving and lower is convex stationary. The feed is divided into two parts going to the upper and lower decks. Heads of upper deck to (41); tailings to middle deck. Heads of middle deck to (41); middlings to lower deck; tailings to (44). Heads of lower deck to (41); middlings to (42); tailings to (44).

41. Three No. 1 settling tanks in series. Settlings shoveled out to (47); overflow to (44).

42. From (17), (37), (39), (40). Nine 7-belt Woodbury vanners. Two treat stuff from (17) and (37), four treat stuff from (39) and three treat stuff from (40). Heads to (47); overflow of heads catch boxes to (43); tailings to (44).

43. No. 2 settling tank. Settlings shoveled to (47); overflow to (44).

44. From (18), (29), (32), (34), (36), (38), (40), (41), (42), (43) and (46). Waste launder to mountain side.

45. From (21), (22), (23), (27), (28), (31), (33), (35), (37). Bins for concentrates. Discharged to cars and wheeled to shipping wagon. Overflow to (46).

46. No. 3 settling tank. Settlings by car to (47); overflow to (44).

47. From (41), (42), (43), (46). The concentrates go by cars and platform elevator to a Cummer dryer and thence to store bins holding 60 tons.

The mill is in duplicate, that is, two mills side by side, each complete in itself and the above description is for one half. The mills can be run together or separately.

The labor required is 23 men per 24 hours, divided into two shifts of 12 hours each: 1 foreman, 2 assistant foremen, 4 breaker men, 2 jig men, 2 slime table and vanner men, 6 pickers, 1 stamp man, 1 motor man, 2 men on dryer, 2 men sacking concentrates. Wages vary from $2.50 per shift for laborers to $3.50 or $4 for mechanics. Board costs $1 per day and coal $10 per ton.

The power is derived from two Pelton wheels 5 and 6 feet in diameter, making 330 and 270 revolutions per minute and using deflecting nozzles 1½ and 1¾ inches in diameter. The supply pipes are 30 to 16 inches diameter, about 4,000 feet long and have heads of 525 feet and 650 feet, respectively. The wheels are rated at 500 and 600 horse power and run a direct current bi-polar 60-kilowatt dynamo with 850 volts. The transmission line to the mill is 1½ miles long of No. 000 copper wire and drives 3 shunt motors. The upper motor uses 30 amperes with 820 volts and drives the breaker, No. 1 rolls, Nos. 1 to 8 trommels, Nos. 1 to 4 elevators, Nos. 1 to 3 jigs and pump. The middle motor uses 35 amperes with 820 volts and runs No. 2 rolls, stamps, No. 9 trommel and No. 5 elevator. The lower motor uses 35 amperes with 820 volts and runs the Huntington mill, the platform elevator, Nos. 4 to 11 jigs, the slime table and vanners. The total horse power required is 110.

The water for the mill is a part of the water coming from the mine tunnel by a flume 4 feet wide, 1 foot deep and sloping 5 inches in 100 feet. The water for Nos. 1 to 8 trommels has to be raised to a tank at the top of the mill by a geared 3-plunger pump. The water after leaving the mill, together with the balance from the tunnel, goes to run the power plant 1½ miles away.

The crude ore contains 20 to 30 ounces silver per ton and 0.2 ounce gold; the concentrates contain 100 to 300 ounces silver and 0.4 to 1.0 ounce gold; the tailings contain 4 ounces silver and a trace of gold per ton.

One hundred tons of mine ore yield 25 tons of concentrates, of which 2½ tons come from the picking table, 1 ton from jigs Nos. 1 to 3, 3 tons from jigs Nos. 4 to 9, and 18½ tons from jigs Nos. 10 and 11 and the fine concentrators. The mill saves about 90% of the silver and gold in the ore.

The preceding outline is the one referred to throughout the book. The mill as thus arranged had certain defects, however, chiefly in the closeness of the sizing, which caused unnecessary screens and unnecessary sliming and wear. It has been recently entirely rearranged according to the following scheme:

Revenue Tunnel Mill as now arranged.

Capacity 175 to 275 tons per 24 hours. Ore is brought in cars holding 3,000 pounds to (1).

1. Two stationary picking tables. Smelting ore to (2); residue to (3).
2. No. 1 bins for picked ore. By car to (32).
3. From (1). Two No. 2 bins. To (4).
4. No. 1 grizzly. Oversize to (5); undersize to (6).

5. Two No. 1 Blake breakers, 9 × 15 inches, crushing to 1 inch. To (6).

6. From (4), (5), (8). One No. 1 bucket elevator, lifting 30 feet. To (7).

7. One No. 1 trommel with 19.1-mm. round holes. Oversize to (8); undersize to (9).

8. One pair of No. 1 rolls, 36 × 14 inches, set ½ inch apart. To (6).

9. From (7) and (16). One No. 2 bucket elevator. To (10).

10. One No. 2 trommel with 12.7-mm. round holes. Oversize to (15); undersize to (11).

11. One No. 3 trommel with 6.4-mm. round holes. Oversize to (17); undersize to (12).

12. One No. 4 trommel with 1.8-mm. square holes. Oversize to (18); undersize to (13).

13. No. 1 hydraulic classifier. Spigots to (19); overflow to (14).

14. No. 1 box classifier. A V-shaped tank 20 feet long and 7 feet deep. Spigots to (28); overflow to (31).

15. From (10). Two No. 1 jigs. 1-sieve Harz jigs with 4.8-mm. round hole sieves. Discharges by car to (32); tailings to (16).

16. One pair of No. 2 rolls, 36 × 14 inches. To (9).

17. From (11). Four No. 2 jigs. 2-sieve Harz jigs with 3.2-mm. round hole sieves. Discharges by car to (32); tailings to (20).

18. From (12). Four No. 3 jigs. 2-sieve Harz jigs with 3.2-mm. round hole sieves. Discharges and hutches by car to (33); tailings to (20) or (24).

19. From (13). Four No. 4 jigs. 2-sieve Harz jigs with 3.2-mm. round hole sieves. Hutches to (33); tailings to (24).

20. From (17), (18). Thirty gravity stamps arranged in six batteries, using a screen with 1.4-mm. square holes. By No. 3 bucket elevator to (21).

21. No. 2 hydraulic classifier. Spigots to (23); overflow to (22).

22. No. 2 box classifier. Spigots to (29); overflow to (34).

23. From (21). Four No. 5 jigs. 2-sieve Harz jigs with 3.2-mm. round hole sieves. Hutches by car to (33); tailings to (24).

24. From (18), (19) and (23). Two 5-foot Huntington mills using a home-made screen with 1-mm. slots costing $0.25 and lasting 8 to 12 days. By No. 4 bucket elevator to (25).

25. No. 3 hydraulic classifier. Spigots to (27); overflow to (26).

26. No. 3 box classifier. Spigots to (30); overflow to (34).

27. From (25). Six No. 6 jigs. 2-sieve Harz jigs with 2-mm. round hole bronze sieves. Hutches by car to (33); tailings to (34).

28. From (14). Five No. 1 Wilfley tables. Heads by car to (33); tailings to (34).

29. From (22). Four No. 2 Wilfley tables. Products like (28).

30. From (26). Three No. 3 Wilfley tables. Products like (28).

31. From (14). Stationary canvas tables, 50 feet long, 4 feet wide and sloping ⅜ inch per foot. Heads by car to (33); tailings to (34).

32. From (2), (15) and (17). Bins for concentrates. To shipping wagon.

33. From (18), (19), (23), (27), (28), (29), (30) and (31). Cummer drier. The dried concentrates are sacked and shipped to smelter.

34. From (22), (26), (27), (28), (29), (30), (31). Waste launder to creek.

The mill is in duplicate and the above description is for one-half only. The two halves can be run together or separately.

The labor required is 59 to 65 men, divided into 2 shifts: 1 foreman, 1 assayer, 1 machinist, 1 blacksmith, 1 carpenter, 1 ore shipper, 4 trammers, 1 fireman, 1 cook and 2 helpers work the day shift only; 2 feeders, 6 jig men, 2 stamp men, 2 Huntington mill men, 2 oilers, 4 table men, 2 general helpers, 24 to 30

pickers are divided so that half of them work each shift; 1 night watchman works only the night shift.

There are 5 electric motors using 80, 50, 25, 15 and 4 amperes, respectively, with 800 volts. This is equal to 186 horse power.

In comparing this new scheme with the old it will be seen that the new is simpler, using less steps and it has a greater capacity. The introduction of Wilfley tables and canvas tables in place of slime tables and vanners is a special feature.

§ 685. MILL No. 28. SMUGGLER MINING COMPANY, ASPEN, COLORADO.—Capacity 100 tons in 10 hours. The mill runs 10 hours per day, 7 days per week. The ore consists of the economic minerals native silver, argentiferous galena, pyrite, argentiferous barite, a little blende and smithsonite, and a gangue of blue limestone and quartz. The minerals are in fine crystallization. The country rock is shale in the hanging wall and brown limestone in the foot wall. The problem is to save the silver and lead without the zinc. The ore comes ½ mile from the mine in open railroad cars and is shoveled to (1).

1. Little tram cars running 125 feet to mill feed hopper from which the ore goes to (2).

2. Shaking grizzly with 1¼-inch spaces. Oversize to (3); undersize to (4).

3. One No. 1 Dodge breaker, 9 × 15 inches, crushing to 1¼ inches. To (4).

There is a duplicate set consisting of feed hopper, grizzly, a 7 × 12-inch Blake breaker and a belt elevator to be used in case of accident to the Dodge breaker.

4. From (2) and (3). No. 1 bin holding 100 tons. By gate and chute, tram car and double platform elevator to (5).

5. No. 1 feeder, similar to Tulloch feeder. To (6).

6. One No. 1 trommel with 16, 25 and 40-mm. round holes. Over 40 mm. to (7); through 40 on 25 to (19); through 25 on 16 to (20); through 16 mm. to (10).

7. From (6), (9), (19), (20). One pair of No. 1 rolls, 26 × 14 inches, set ⅛ inch apart. To No. 2 bin holding 7 tons and thence by gate and chute, car and platform elevator mentioned in (4) to (8).

8. No. 2 feeder, similar to Tulloch feeder. To (9).

9. One No. 2 trommel with 16-mm. round holes. Oversize to (7); undersize to (10).

10. From (6) and (9). One No. 3 trommel with 12-mm. round holes. Oversize to (21); undersize to (11).

11. One No. 4 trommel with 8-mm. round holes. Oversize to (22); undersize to (12).

12. One No. 5 trommel with 5-mm. round holes. Oversize to (23); undersize to (13).

13. One No. 6 trommel with 3.5-mm. round holes. Oversize to (24); undersize to (14).

14. One No. 7 trommel with 2-mm. round holes. Oversize to (25); undersize to (15).

15. From (14), (29) and (32). One No. 1 hydraulic classifier. A Meinecke classifier with 4 spigots. 1st spigot to (33); 2d to (35); 3d to (37); 4th to (39); overflow to (16).

16. Two No. 2 hydraulic classifiers.* Meinecke *spitzlutten* with 2 spigots each. Spigots by No. 1 Frenier sand pump to (17); overflow to (18).

17. One No. 1 surface current box classifier with 2 spigots. 1st spigot to upper deck of (42); 2d spigot to lower deck of (42); overflow to (18).

18. From (16) and (17). No. 1 whole current box classifier with 5 spigots. Spigots by No. 2 Frenier sand pump to lower deck of (43); overflow to (50).

* These are now thrown out, the stuff going straight to (17).

19. From (6). One No. 1 jig. 2-sieve crank arm accelerated jig fed at the middle partition, making practically two 1-sieve jigs. Discharges and hutches to (44); tailings to (7).

20. From (6). Two No. 2 jigs. 1-sieve crank arm accelerated jigs. Products like (19).

21. From (10). One No. 3 jig. 4-sieve crank arm accelerated jig. 1st and 2d discharges to (44); 3d and 4th to (26); 1st and 2d hutches to (44); 3d and 4th to (26); tailings to (50).

22. From (11). One No. 4 jig. 4-sieve crank arm accelerated jig. Products like (21).

23. From (12). One No. 5 jig. 4-sieve crank arm accelerated jig. Products like (21).

24. From (13). One No. 6 jig. 4-sieve crank arm accelerated jig. 1st and 2d discharges to (44); 3d and 4th by car and platform elevator mentioned in (4) to (31); 1st and 2d hutches to (44); 3d and 4th by car and platform elevator mentioned in (4) to (31); tailings to (50).

25. From (14). One No. 7 jig. 4-sieve crank arm accelerated jig. Products like (24).

26. From (21), (22), (23) and (28). One pair of No. 2 rolls, 30 × 16 inches, set close together. To No. 3 bin holding 10 tons, and thence by gate and chute, car and platform elevator mentioned in (4) to (27).

27. No. 3 feeder, similar to Tulloch feeder. To (28).

28. One No. 8 trommel with 3½-mm. round holes. Oversize to (26); undersize to (29).

29. Two No. 9 trommels with 2-mm. round holes. Oversize to (30); undersize to (15).

30. One No. 8 jig. 4-sieve crank arm accelerated jig. Products like (24).

31. From (24), (25), (30). No. 4 Hendy feeder. To (32).

32. One 6-foot Huntington mill using a screen with 2-mm. round holes. To (15).

33. From (15). One No. 1 unwatering box. Spigot to (34); overflow to (41).

34. One No. 9 jig. 5-sieve crank arm accelerated jig. Hutches to (46); tailings to (50).

35. From (15). One No. 2 unwatering box. Spigot to (36); overflow to (41).

36. One No. 10 jig. 5-sieve crank arm accelerated jig. Products like (34).

37. From (15). One No. 3 unwatering box. Spigot to (38); overflow to (41).

38. One No. 11 jig. 5-sieve crank arm accelerated jig. Products like (34).

39. From (15). One No. 4 unwatering box. Spigot to (40); overflow to (41).

40. One No. 12 jig. 5-sieve crank arm accelerated jig. Products like (34).

41. From (33), (35), (37), (39). Two No. 5 unwatering boxes. Settlings to lower deck of (43); overflow returned as hydraulic water for jigs Nos. 9 to 12 or to (50).

42. From (17). One No. 1 table. A 2-deck revolving slime table. Upper deck is concave and lower is convex. Heads of both decks to (48); middlings by No. 3 Frenier sand pump to upper deck of (43); tailings to (50).

43. From (18), (41) and (42). One No. 2 table. A 2-deck revolving slime table. Upper deck is concave and lower is convex. Heads of both decks to (48); middlings by pump to upper deck; tailings to (50).

44. From (19), (20), (21), (22), (23), (24), (25), (30). Bins for concentrates. Concentrates shoveled out and go to (49); drainings to (45).

45. Three No. 1 settling tanks. Settlings to (49); overflow to (50).

46. From (34), (36), (38), (40). Bins for concentrates. Concentrates shoveled out and go to (49); drainings to (47).

47. Two No. 2 settling tanks. Settlings to (49); overflow to (50).

48. From (42) and (43). No. 3 settling tank. Settlings to (49); overflow to (50).

49. From (44), (45), (46), (47), (48). Cars and platform elevator to two drying floors, each 25 × 12½ feet. Dried concentrates shipped in railroad cars to smelter.

50. From (18), (21), (22), (23), (24), (25), (30), (34), (36), (38), (40), (41), (42), (43), (45), (47), (48). Tailings launder, 125 feet long. To creek.

The labor required per 10 hours is 15 or 16 men: 1 or 2 breaker men, 1 man on rolls, Huntington mill and trommels, 4 jig men, 1 table man, 8 others. Wages are $2.75 per day. Board costs $1 per day, coal $6 per ton, and wood $4 per cord.

The power is furnished by a 90-kilowatt (110 horse power) electric motor. The motor is a 500-volt continuous current multipolar machine, shunt wound (for constant speed) with a speed controlling rheostat in the field circuit for varying the speed within a range of 30% without loss of power. The power is generated by water running Pelton water wheels 1 mile distant. The mill uses from 40 to 80 horse power, average about 65. There is a steam boiler in the mill for the drying floor.

The water comes from Roaring Fork River by a flume, 28 × 20 inches, 450 feet long, and entering the mill under a head of 2 feet. The mill uses 1,500 gallons per minute, but it could be run with 1,000 gallons.

The ore from the mine contains 9½% lead* and 14.8 ounces silver per ton. The concentrates from jigs No. 1 to 8 contain 39.6% lead* and 25 ounces silver per ton; those from jigs No. 9 to 12 contain 27.9% lead* and 20 ounces silver. The tailings contain 0.2% lead* and 2 ounces silver per ton. The mill saves over 90% of the lead and silver.

§ 686. MILL NO. 29. UTE AND ULAY, LAKE CITY, COLORADO.—Capacity 350 tons in 24 hours. The mill runs 24 hours per day, 7 days per week. The ore consists of the economic minerals pyrite, blende, chalcopyrite, tetrahedrite and argentiferous galena in coarse crystallization and a gangue of quartz. The problem is to save the silver and lead without the zinc. The mill is in two halves. One-half is here described. The ore from the mine is wheeled to (1).

1. Receiving bin holding 30 tons. Shoveled to (2).

2. One No. 1 Blake breaker, 8 × 10 inches, crushing to 17 mm. To (3).

3. One pair of No. 1 rolls, 21 × 12 inches, set ½ inch apart. To (4).

4. From (3) and (6). One No. 1 bucket elevator. To (5).

5. One No. 1 trommel with 8-mm. round holes. Oversize to (6); undersize to (7).

6. One pair of No. 2 rolls, 21 × 16 inches, set ¼ inch apart. To (4).

7. From (5) and (9). One No. 2 trommel with 6-mm. round holes. Oversize to (8); undersize to (10).

8. One pair of No. 3 rolls, 21 × 16 inches, set close together. To (9).

9. One No. 2 bucket elevator. To (7).

10. From (7). One No. 3 trommel with 4-mm. round holes. Oversize to (15); undersize to (11).

11. One No. 4 trommel with 3-mm. round holes. Oversize to (16); undersize to (12).

* Probably assayed by fire.

12. One No. 5 trommel with 2½-mm. round holes. Oversize to (17); undersize to (13).

13. One No. 1 hydraulic classifier with 2 spigots. 1st spigot to (18); 2d to (19); overflow to (14).

14. One No. 2 hydraulic classifier with 2 spigots. 1st spigot to (20); 2d to (21); overflow by distributor to (22).

15. From (10). Two No. 1 jigs. 4-sieve Harz jigs. Discharges and hutches to (23); tailings to (24).

16. From (11). Two No. 2 jigs. 4-sieve Harz jigs. Products like (15).

17. From (12). Two No. 3 jigs. 4-sieve Harz jigs. Products like (15).

18. From (13). One No. 4 jig. 4-sieve Harz jig. Products like (15).

19. From (13). One No. 5 jig. 4-sieve Harz jig. Hutches to (23); tailings to (24).

20. From (14). One No. 6 jig. 4-sieve Harz jig. Products like (19).

21. From (14). One No. 7 jig. 4-sieve Harz jig. Products like (19).

22. From (14). Three convex revolving slime tables. Heads to (23); middlings pumped back to tables by centrifugal pump; tailings to (24).

23. From (15), (16), (17), (18), (19), (20), (21), (22). A conical revolving drier with a capacity of 30 to 40 tons in 24 hours.

24. From (15), (16), (17), (18), (19), (20), (21), (22). Waste launder to creek.

The labor required is 25 men per 24 hours divided into two shifts: 2 engineers, 6 firemen, 6 crushermen, 6 jig men, 3 slime table men and 2 others. Wages range from $2.50 to $3 per day. Board costs $26 per month.

The power is derived either from water or steam. The latter is used only when there is a scarcity of the former. The mill requires 80 horse power.

The water is supplied by a flume.

The crude ore contains about 6% lead and 4 ounces silver per ton; the concentrates carry 60% lead, 19 ounces silver and 0.02 ounce gold per ton; the tailings carry 0.5% lead and 1 ounce silver per ton. One hundred tons of ore yield about 35 tons of concentrates. The mill saves about 60% of the silver and over 90% of the lead.

(*g*) COMPLEX JIGGING MILLS DRESSING ORES OF SILVER AND LEAD IN IDAHO AND IN EUROPE.

§ 687. This group includes Mills 30 to 37 inclusive, the Himmelfahrt mill at Freiberg, and the mills at Laurenburg and Clausthal. Mills 30 to 37 crush by breakers and rolls, and wash by screens, classifiers, jigs, and tables or vanners. Mills 30 and 31 send coarse middlings to auxiliary rolls, and then back into the system, but send fine middlings to auxiliary rolls, screens and jigs, and the fine undersize goes back into the system. Mills 32 and 35 send all middlings to auxiliary rolls, screens, classifiers and jigs, and the fine overflow of classifiers back into the system. The graded crushing of the middlings in Mill 32 appears to be very systematic. Mills 33, 34 and 36 send all middlings to auxiliary rolls, and then back into the system. Mill 37 sends coarse middlings to auxiliary rolls and then back into the system, but it sends fine middlings to auxiliary rolls and Huntington mills, screens, classifiers and jigs, and the fine overflow of the classifiers back into the system. The middlings jigs make second middlings which go back into the middlings system.

Mills 36 and 37 both illustrate the coupling together of two kinds of machines to get the best results. In the former mill the slime table heads are cleaned on a vanner, and in the latter the middlings of the slime tables are cleaned on Wilfley tables.

The three foreign mills are inserted here for comparison of European with American methods. They show a longer treatment involving the use of more labor, more crushing and recrushing of middlings and more rewashing of tailings in order to save every grain of mineral that can be saved economically. They are in marked contrast with the hustling American mills which seek to eliminate labor as far as possible.

§ 688. MILL NO. 30. BUNKER HILL AND SULLIVAN MINING AND CONCENTRATING COMPANY, KELLOGG, IDAHO.—Capacity 530 tons in 24 hours. The mill runs 24 hours per day, 7 days per week. The ore consists of the economic minerals argentiferous galena and some pyrite, and a gangue of quartzite and siderite. The galena is sometimes in coarse lumps but usually it is finely disseminated through the gangue. The problem is to save the silver and lead without the zinc. The ore is hand picked in the mine into two classes: smelting ore to (1); concentrating ore by cars holding 3,000 pounds to (5).

1. Chutes or store bins in the mine. By cars holding 3,400 pounds to (2).

Rock House.

2. One No. 1 grizzly with 1¼-inch spaces. Oversize by chute and gate to (3); undersize to (4).

3. A Blake breaker for smelting ore, 9 × 15 inches, crushing to 2½ inches. To (4).

4. From (2) and (3). No. 1 bin. 25 feet long, 20 feet wide, and 20 feet deep, with flat bottom, holding 750 tons. By gates and chutes to (8).

5. From the mine. Two No. 2 grizzlies with 1¼-inch spaces. Oversize to (6); undersize to (7).

6. Two breakers for concentrating ore. One is a Gates No. 4, and the other is a Blake 9 × 15 inches, both crushing to 2½ inches. The latter is run only in case of emergency. To (7).

7. From (5) and (6). No. 2 bin, 48 feet long, 20 feet wide and 20 feet deep, with flat bottom, holding 1,400 tons. By chutes and gates to (8).

8. From (4) and (7). A Bleichert rope tramway with buckets 30 inches long, 15 inches deep, 24 inches wide at the top, 16 inches wide at bottom, holding about 732 pounds of ore, and placed about 140 feet apart. The tramway is 1⅞ miles long, and the round trip is made in 63 minutes. It delivers the shipping ore to (9) and the concentrating ore to (10).

Mill.

9. No. 3 or shipping bin, 34 feet long, 7 feet wide, and 16 feet deep, with sloping bottom, holding 250 tons. To shipping car to go to smelter.

10. From (8). No. 4 bin with flat bottom holding about 3,200 tons of ore. To (11).

11. Eighteen picking chutes. Rich ore (about 2½% of the total) to (12); residue to (13).

12. Twelve No. 5 bins for picked ore. To shipping car to go to smelter.

13. From (11). Two No. 1 pan conveyors with pans 23½ inches wide at the top, 21 inches at the bottom, 14 inches long, with 2 inches lap, and 6 inches deep. Each is driven by a sprocket chain at the rate of 60 feet per minute. The upper wheels are 10 inches diameter, 28 inches apart; the return wheels below are 15 inches diameter. Total length is 85 feet. To (14).

14. Two No. 2 pan conveyors like (13) except they slope up 40° or 10 inches per foot, the pans are 8 inches deep with a 5-inch wall at the back end, and the return wheels below are grooved. To (15).

15. Two No. 6 bins holding 30 tons each. By two sliding block feeders to (16).

16. Two pairs of No. 1 rolls, 36 × 14 inches, set ½ inch apart. To (17).

17. From (16), (19) and (31). Two No. 1 bucket elevators. To (18).

18. Two No. 1 trommels. Sectional with 10, 15 and 25-mm. round holes. Over 25 mm. to (19); through 25 on 15 mm. to (27); through 15 on 10 mm. to (28); through 10 mm. to (20).

19. Two pairs of No. 2 rolls, 24 × 14 inches, set ½ inch apart. To (17).

20. From (18). Four No. 2 trommels. Sectional with 3, 5 and 7-mm. round holes. Over 7 mm. to (29); through 7 on 5 mm. to (32); through 5 on 3 mm. to (33); through 3 mm. to (21).

21. From (20) and (38). Four No. 1 hydraulic classifiers with 3 spigots each. 1st spigot to (34); 2d to (35); 3d to (36); overflow to (22).*

22. Four No. 1 whole current box classifiers with 4 spigots each. 1st spigot to upper deck of (39); 2d to upper deck of (40); 3d to upper decks of (39) and (41); 4th to upper deck of (41); overflow to (23).

23. One No. 1 distributing tank with 12 spigots. Spigots in pairs to (42); overflow to (24).

24. One No. 2 whole current box classifier with 4 spigots. Spigots in pairs to (43); overflow to (25).

25. One No. 3 whole current box classifier with 4 spigots. Spigots in pairs to (44); overflow to (26).

26. Two No. 1 settling tanks used alternately. Settlings shoveled out and stored for future treatment; overflow to (49).

27. From (18). Two No. 1 jigs. 3-sieve Harz jigs. 1st discharge to (45); 2d and 3d to (30); 1st hutch to (45); 2d and 3d to (30); tailings to (48).

28. From (18). Two No. 2 jigs. 3-sieve Harz jigs. Products like (27).

29. From (20). Four No. 3 jigs. 3-sieve Harz jigs. Products like (27).

30. From (27), (28) and (29). Two No. 2 bucket elevators. To (31).

31. Two pairs of No. 3 rolls, 30 × 16 inches, set close together. To (17).

32. From (20). Eight No. 4 jigs. 3-sieve Harz jigs. 1st discharge to (45); 2d to (46); 3d to (37); 1st hutch to (45); 2d to (46); 3d to (37); tailings to (48).

33. From (20) and (38). Eight No. 5 jigs. 3-sieve Harz jigs. Products like (32).

34. From (21). Eight No. 6 jigs. 3-sieve Harz jigs. 1st discharge to (45); 2d not used; 3d to (37); 1st hutch to (45); 2d to (46); 3d to (37); tailings to (49).

35. From (21). Four No. 7 jigs. 4-sieve Harz jigs. 1st hutch to (45); 2d and 3d to (46); 4th to (37); tailings to (49).

36. From (21). Four No. 8 jigs. 4-sieve Harz jigs. 1st and 2d hutches to (45); 3d to (46); 4th to (37); tailings to (49).

37. From (32), (33), (34), (35), (36) and (38). Two pairs of No. 4 rolls. By two No. 3 bucket elevators to (38).

38. Two No. 3 trommels. Sectional with 2½ and 5-mm. round holes. Over 5 mm. to (37); through 5 on 2½ mm. to (33); through 2½ mm. to (21).

39. From (22). One No. 1 convex revolving slime table with 2 decks. Heads of upper deck to (45); middlings to lower deck; tailings to (49); heads of lower deck to (46); middlings should be made to go to (24) but are not; tailings to (49).

40. From (22). One No. 2 convex revolving slime table with 2 decks. Products like (39).

---

* Change made later. See comments at the end of this mill.

41. From (22). One No. 3 convex revolving slime table with 2 decks. Products like (39).

42. From (23). Nos. 1 to 6 vanners. 4-foot Frue vanners. Heads to (45); tailings to (49).

43. From (24). Nos. 7 and 8 vanners. 4-foot Frue vanners. Products like (42).

44. From (25). Nos. 9 and 10 vanners. 4-foot Frue vanners. Heads to (46); tailings to (49).

45. From (27), (28), (29), (32), (33), (34), (35), (36), (39), (40), (41), (42), (43). Six No. 2 settling tanks holding 75 tons each, for first class concentrates. Settlings shoveled out to car, sampled, weighed and wheeled to shipping car to go to smelter; overflow to (47).

46. From (32), (33), (34), (35), (36), (39), (40), (41), (44). Six No. 3 settling tanks holding 30 tons each, for second class concentrates. Products like (45).

47. From (45) and (46). One No. 4 settling tank. Settlings shoveled out to car, sampled, weighed and wheeled to shipping car to go to smelter; overflow to (49).

48. From (27), (28), (29), (32), (33). Launder for coarse material to store heaps outside the mill. Kept for possible future value.

49. From (26), (34), (35), (36), (39), (40), (41), (42), (43), (44), (47). Launder for fine material to creek.

This mill, except for the fine concentration part is arranged in two independent halves. This includes paragraphs (11) to (22) inclusive and (27) to (38) inclusive.

The labor required is 44 to 54 men, divided into 2 shifts of 12 hours each. The day shift has 1 foreman, 4 jig men, 1 table and vanner man, 1 man oiling machinery and looking after electric lights, 1 man on feeder and pan conveyors, 1½ breaker men in rock house, ¼ man heating mill in cold weather, ½ man on flume, 1 mechanic making repairs and changes, 1½ carpenters, 1 helper and 10 to 15 ore pickers. The night shift has 1 night boss, 4 jig men, 1 table and vanner man, 1 man oiling, 1 feeder, 1 breaker man, ¼ man heating mill, 1 watchman and 10 to 15 pickers. Wages vary from $2.50 to $4.50 per day. Board costs $6 per week; wood costs $2.80 per cord at the mill and $3.10 at the mine. Sampling and loading the concentrates is charged as shipping expense and amounts to 5.1 cents per ton of concentrates.

Power for the rock house is furnished by a Pelton water wheel running under a head of 280 feet. Power at the mill is furnished by two Leffel turbine wheels, 17½ inches in diameter, taking water from the flume under a head of 58 feet, and generating 76 horse power each.

Water is supplied by a flume 7 feet 9 inches wide, 5 feet deep, 1¾ miles long, with a grade of ¼ inch in 16 feet. It is necessary to elevate the water for the trommels to a store tank at the top of the mill holding 1,500 gallons, by 2 centrifugal pumps with 4-inch discharge pipes, and making 450 revolutions per minute.

Assays are as follows:

	Lead.	Silver. Per Ton.	Iron (Fe).	Manganese (Mn).	Silica (SiO_2).
	%	Ounces.	%	%	%
Smelting ore from the mine	40-48	16-25	14-16	.....	7-9
Concentrating ore from the mine	9-14	4-7	24-27	2-3	23-26
Picked ore from (12)	46	22	20	.....	5
First class concentrates from (45)	65	28	12	.....	2
Second class concentrates from (46)	40	16	23	.....	3
Coarse tailings (48)	1.96	1.03	28	.....	34
Fine tailings	3.55	1.84	34	.....	21
Slimes from No. 1 settling tank (26), small in amount	18.0	9.0	.....	.....	.....

The mine yields per day of 24 hours 5 to 10 tons of smelting ore and 450 to 500 tons of concentrating ore. One hundred tons of concentrating ore in the mill yield 0 to 3 tons of hand picked smelting ore, 9 to 12 tons of first class concentrates, and 3 to 4 tons of second class concentrates, and 81 to 88 tons of tailings. The mill saves 76% of the lead and 72% of the silver.

After the author's visit a change was made in this mill which resulted in an increased saving. The overflows of the four No. 1 hydraulic classifiers (21) were all sent to fifteen convex revolving slime tables, and these tables make heads to smelter, tailings to waste and middlings to a box classifier sending spigots to ten 4-foot Frue vanners and overflow to waste. The vanners yield heads to smelter and tailings to waste. The stuff fed to the tables contains 10% lead, the table heads 34%, tailings 5%, and middlings (fed to vanner) 8% lead. The vanner heads contain 50% lead, tailings 4%, and the overflow of the box classifier 10.6% lead, but is small in amount. The total table heads amounts to 10 tons per 24 hours, and the vanner heads amount to 2 tons.

Recently the old mill has been blown up and a new mill built, using practically the same scheme as in the old. Four 5-foot Huntingtons have been installed to help the rolls in grinding middlings, and there are now eight 3-deck slime tables and twenty-one Frue vanners. The capacity is stated to be 1,000 tons per 24 hours.[366]

§ 689. Mill No. 31. Gem Mill of the Milwaukee Mining Company, Gem, Idaho.—Capacity 200 tons in 24 hours. The mill runs 24 hours per day, 7 days per week. The ore consists of the economic minerals argentiferous galena and blende and a gangue of quartz. The problem is to save the silver and lead without the zinc. The ore from the upper and middle tunnels of the mine is held in a bin holding 100 tons, and thence lowered by an incline to (1); the ore from the lower tunnel is hauled in cars by horses to (1).

1. Mill bin holding 60 tons. By gate to (2).
2. Picking chute. Rich smelting ore (1.6% of total) to bin to be shipped to smelter; residue to (3).
3. One No. 1 Blake breaker, 7 × 10 inches, crushing to 1½ inches. To (4).
4. One pair of No. 1 rolls, 36 × 18 inches, set ½ inch apart. To (5).
5. From (4) and (21). One No. 1 bucket elevator. To (6).
6. One No. 1 trommel. Sectional and concentric with 9, 15 and 18-mm. round holes. Over 18 mm. to (13); through 18 on 15 to (14); through 15 on 9 to (15); through 9 mm. to (7).
7. One No. 2 trommel. Sectional and concentric with 4- and 6-mm. round holes. Over 6 mm. to (16); through 6 on 4 mm. to (17); through 4 mm. to (8).
8. One No. 1 surface current box classifier with 3 spigots. 1st spigot to (18); 2d to (19); 3d to (20); overflow to (9).
9. From (8) and (24). One No. 2 surface current box classifier with 5 spigots. Spigots to both decks of (28); overflow to (10).
10. One No. 3 surface current box classifier with 5 spigots. Spigots to both decks of (28); overflow to (11).
11. One No. 1 whole current box classifier with 4 spigots. Spigots to (29); overflow to (12).
12. One No. 2 whole current box classifier with 4 spigots. Spigots to (29); overflow to (30).
13. From (6). Two No. 1 jigs. 2-sieve sliding block accelerated jigs. 1st discharge to (31); 2d to (21); 1st hutch to (31); 2d to (21); tailings to (34).
14. From (6). Two No. 2 jigs. 2-sieve Harz jigs. Products like (13).
15. From (6). Two No. 3 jigs. 2-sieve Harz jigs. Products like (13).
16. From (7). One No. 4 jig. 4-sieve Harz jig. 1st and 2d discharges to

(31); 3d and 4th to (21); 1st and 2d hutches to (31); 3d and 4th to (21); tailings to (34).

17. From (7). One No. 5 jig. 4-sieve Harz jig. Products like (16).

18. From (8). One No. 6 jig. 4-sieve Harz jig. 1st and 2d discharges to (31); 3d and 4th to (22); 1st and 2d hutches to (31); 3d and 4th to (22); tailings to (34).

19. From (8). One No. 7 jig. 4-sieve Harz jig. 1st discharge to (31); 1st and 2d hutches to (31); 3d and 4th hutches to (22); tailings to (34).

20. From (8). One No. 8 jig. 4-sieve Harz jig. 1st and 2d hutches to (31); 3d and 4th to (22); tailings to (34).

21. From (13), (14), (15), (16), (17). One pair of No. 2 rolls, 24 × 12 inches, set ¼ inch apart. To (5).

22. From (18), (19), (20), (23), (25), (26), (27). One pair of No. 3 rolls, 24 × 12 inches, set close together. By No. 2 elevator to (23).

23. One No. 3 trommel with 2½-mm. round holes. Oversize to (22); undersize to (24).

24. One No. 4 surface current box classifier with 3 spigots. 1st spigot to (25); 2d to (26); 3d to (27); overflow to (9).

25. One No. 9 jig. 4-sieve Harz jig. 1st and 2d discharges to (31); 3d and 4th to (22); 1st and 2d hutches to (31); 3d and 4th to (22); tailings to (34).

26. From (24). One No. 10 jig. 4-sieve Harz jig. 1st and 2d hutches to (31); 3d and 4th to (22); tailings to (34).

27. From (24). One No. 11 jig. 4-sieve Harz jig. Products like (26).

28. From (9) and (10). No. 1 slime table. A 2-deck convex revolving slime table. Heads of upper deck to (31); middlings to lower deck; tailings to (34). Heads of lower deck to (31); middlings to (30); tailings to (34).

29. From (11) and (12). No. 2 slime table A 2-deck convex revolving slime table. Products like (28).

30. From (12), (28) and (29). Four 4-foot Frue vanners. Heads to (31); tailings to (34).

31. From (13), (14), (15), (16), (17), (18), (19), (20), (25), (26), (27), (28), (29), (30). No. 3 bucket elevator for concentrates. To (32).

32. Three No. 1 settling tanks. While one is filling, one is draining and one is being emptied. Settlings shipped to smelter; overflow to (33).

33. One No. 2 settling tank. Settlings shipped to smelter; overflow to (34).

34. From (13), (14), (15), (16), (17), (18), (19), (20), (25), (26), (27), (28), (29), (30), (33). Tailings launder, 200 feet long, to creek.

The labor required is 15 men per 24 hours divided into two shifts: 3 engineers, 2 firemen, 1 foreman, 2 men at rock breaker, 4 jig men, 2 vanner men, 1 other man. Wages vary from $3 to $5 per day. Board costs $30 per month, and wood is $3.70 per cord.

The power is derived from 3 fire tube boilers 16 feet long, 72 inches diameter, one with 72 tubes and two with 56 tubes all 4 inches diameter, running under a pressure of 90 pounds per square inch, and consuming 10 cords of wood per 24 hours; and a Buckeye engine with cylinder 10 × 18 inches, making 150 revolutions per minute, cutting off at ⅞ stroke and developing 75 indicated horse power.

The water is derived from a flume 3 feet wide and 4 feet deep with a grade of ½ inch in 100 feet, bringing water 1,700 feet from the creek. A pump with cylinder 10 × 10 inches, making 40 revolutions per minute, lifts water 12 feet to a store tank.

The ore contains 10 to 13% lead and 5½ to 7 ounces silver per ton. The concentrates contain 62 to 65% lead and 32 to 36 ounces silver. The tailings con-

tain 1 to 1½% lead and 1½ to 2 ounces silver per ton. One hundred tons of ore yield 1.7 tons of smelting ore picked out by hand, and 16 tons of concentrates and 82 tons of tailings. The mill saves about 90% of the lead and about 80% of the silver.

§ 690. MILL NO. 32. HELENA AND FRISCO MINING COMPANY, GEM, IDAHO. —Capacity 600 tons in 24 hours. The mill runs 24 hours per day, 7 days per week. The ore is of two kinds: (*a*) the upper oxidized ore from near the surface, containing the economic minerals cerrusite and pyromorphite and a gangue of quartz and iron oxide; (*b*) sulphide ore from below containing the economic minerals argentiferous galena, pyrite, chalcopyrite and blende and a gangue of quartz. The galena is more or less finely disseminated. The problem is to save the lead and silver without the zinc. Both kinds of ore are treated together. The ore is brought in cars to (1).

1. No. 1 or receiving bin holding 1,600 tons. By gates and chutes to (2).
2. Two No. 1 grizzlies with 1½-inch spaces. Oversize to (3); undersize to (4).
3. Two No. 1 Blake breakers, 9 × 15 inches, crushing to 1½ inches. To (4).
4. From (2) and (3). One No. 2 bin with hopper bottom, holding 25 tons. By Tulloch feeder to (5).
5. One pair of No. 1 rolls, 31 × 16 inches, set ⅛ inch apart. To (6).
6. Two No. 1 trommels. Sectional with 8 and 12-mm. round holes. Over 12 mm. to (10); through 12 on 8 to (11); through 8 mm. to (7).
7. From (6) and (17). One No. 2 trommel. Sectional with 3- and 6-mm. round holes. Over 6 mm. to (12); through 6 on 3 mm. to (13); through 3 mm. to (8).
8. One No. 1 hydraulic classifier with 5 spigots. Spigots are distributed to (14), (15) and (16); overflow to (9).
9. From (8) and (23). No. 1 whole current box classifier. Spigots to upper and middle decks of (27); overflow to (31).
10. From (6). One No. 1 jig. 2-sieve Harz jig. 1st discharge to (30); 2d to (18); 1st and 2d hutches to (18); tailings (only water and chips) to (31).
11. From (6). Four No. 2 jigs. 4-sieve Harz jigs. 1st and 2d discharges to (30); 3d and 4th to (17); all 4 hutches to (30); tailings to (17).
12. From (7). Two No. 3 jigs. 4-sieve Harz jigs. 1st and 2d discharges to (30); 3d and 4th to (19); 1st and 2d hutches to (30); 3d and 4th to (19); tailings to (31).
13. From (7). Four No. 4 jigs. 4-sieve Harz jigs. Products like (12).
14. From (8). Two No. 5 jigs. 4-sieve Harz jigs. 4th discharge to (19); 1st and 2d hutches to (30); 3d and 4th to (19); tailings to (31).
15. From (8). One No. 6 jig. 4-sieve Harz jig. Products like (14).
16. From (8). One No. 7 jig. 4-sieve Harz jig. 1st and 2d hutches to (30); 3d and 4th to (19); tailings to (31).
17. From (11). One No. 3 trommel with 5-mm. round holes. Oversize to (18); undersize to (7).
18. From (10) and (17). One pair of No. 2 rolls, 22 × 14 inches, set close together. To (19).
19. From (12), (13), (14), (15), (16), (18), (21), (22), (24), (25), (26). One No. 1 bucket elevator. To (20).
20. One No. 4 trommel. Sectional with 2- and 5-mm. round holes. Over 5 mm. to (21); through 5 on 2 mm. to (22); through 2 mm. to (23).
21. One pair of No. 3 rolls, 22 × 14 inches, set close together. To (19).
22. From (20). One pair of No. 4 rolls, 22 × 10 inches, set close together. To (19).
23. From (20). One No. 2 hydraulic classifier with 5 spigots. Spigots distributed to (24), (25) and (26); overflow to (9).

24. Three No. 8 jigs. 4-sieve Harz jigs. 4th discharge to (19); 1st and 2d hutches to (30); 3d and 4th to (19); tailings to (31).

25. From (23). One No. 9 jig. 4-sieve Harz jig. Products like (24).

26. From (23). One No. 10 jig. 1st and 2d hutches to (30); 3d and 4th to (19); tailings to (31).

27. From (9). Three 3-deck convex revolving slime tables. Heads of upper decks to (30); middlings to lower deck; tailings to (31). Heads of middle decks to (30); middlings to lower deck; tailings to (31). Heads of lower decks to (30); middlings to (28); tailings to (31).

28. One No. 2 whole current box classifier with 16 spigots. 1st to 5th spigots to No. 1 vanner (29); 6th to 10th to No. 2 vanner (29); 11th to 13th to No. 3 vanner (29); 14th to 16th to No. 4 vanner (29); overflow to (31).

29. Nos. 1 to 4 vanners. No. 1 and No. 2 are 6-foot Frue vanners. No. 3 and No. 4 are 4-foot Frue vanners. Heads to (30); tailings to (31).

30. From (10), (11), (12), (13), (14), (15), (16), (24), (25), (26), (27), (29). Concentrates bin holding 50 tons. To shipping car to go to smelter.

31. From (9), (10), (12), (13), (14), (15), (16), (24), (25), (26), (27), (28), (29). Tailings launder to creek.

The labor required is 13 men per 24 hours divided into 2 shifts: 2 foremen, 2 breaker men, 1 rolls man, 4 jig men, 2 table and vanner men, 2 ore loaders. Wages range from $3 to $5 per day. Board costs $1 per day, coal $5 per ton, and wood $3.50 per cord.

The mill is run by water power, requiring 173 horse power.

Water is brought from a creek by a flume 3 × 3 feet, with a fall of 1 inch in 100 feet.

The mill has been recently improved by changing the sieve scale somewhat, increasing the number of jigs and vanners and rearranging some of the machines. The present scheme is as follows:

Helena and Frisco Mining Company's Rearranged Mill.[179]

Capacity 600 tons in 24 hours. The ore comes from the mine in cars which are weighed and dumped into (1).

1. No. 1 bin holding 60 car loads. To (2).

2. Two grizzlies. Oversize, from which wood, spikes, broken hammers, candle hooks, etc., are picked out by hand, to (3); undersize to (4).

3. Two No. 1 Blake breakers, one 10 × 20 inches, the other 10 × 15 inches used for emergency, crushing to 1 or 1¼ inches. To (4).

4. From (2) and (3). No. 2 bin. By Tulloch feeder to (5).

5. One pair of No. 1 rolls, 30 × 15 inches, set ¾ inch apart. To (6).

6. From (5) and (17). One No. 1 trommel. Sectional with 10- and 15-mm. round holes. Over 15 mm. to (12); through 15 on 10 mm. to (13); through 10 mm. to (7).

7. Two No. 2 trommels. Sectional with 3, 5 and 7-mm. round holes. Over 7 mm. to (14); through 7 on 5 mm. to (15); through 5 on 3 mm. to (8); through 3 mm. to (8).

8. One No. 1 hydraulic classifier with 5 spigots. 1st spigot to (18); 2d to (19); 3d to (20); 4th to (21); 5th to (22); overflow to (9).

9. From (8), (29) and (35). One No. 1 box classifier. Three tanks, one above another. Upper tank is fed from (8) and (29); middle tank is fed with half of the spigots of the upper tank; the lower tank is fed from (35). Spigots of upper tank go half to upper decks of (35) and half to middle tank; overflow to (10). Spigots of middle tank to middle decks of (35); overflow, none. Spigots of lower tank to lower decks of (35); overflow, none.

10. One No. 2 box classifier in two parts. Earlier spigots to (37); later spigots to (11); overflow to (42).

11. From (10) and (37). One No. 3 box classifier. Spigots to (38); overflow to (42).

12. From (6). One No. 1 jig. A 3-sieve Harz jig. Heads to (16); tailings to (42).

13. From (6). Four No. 2 jigs. 4-sieve Harz jigs. 1st and 2d discharges to (39); 3d and 4th to (16); all 4 hutches to (16); tailings to (42).

14. From (7). Two No. 3 jigs. 4-sieve Harz jigs. Products like (13).

15. From (7). Two No. 4 jigs. 4-sieve Harz jigs. 1st and 2d discharges to (39); 3d and 4th to (16); 1st and 2d hutches to (39); 3d and 4th to (16); tailings to (42).

16. From (12), (13), (14), (15). One No. 1 bucket elevator. To (17). Overflow of elevator well to (41).

17. One pair of No. 2 rolls, 36 × 14 inches. To (6).

18. From (8). Two No. 5 jigs. 4-sieve Harz jigs. 1st and 2d discharges to (39); 3d and 4th to (23); 1st and 2d hutches to (39); 3d and 4th to (23); tailings to (42).

19. From (8). Two No. 6 jigs. 4-sieve Harz jigs. 3d and 4th discharges to (23); 1st and 2d hutches to (39); 3d and 4th to (23); tailings to (42).

20. From (8). Two No. 7 jigs. 4-sieve Harz jigs. 4th discharge to (23); 1st and 2d hutches to (39); 3d and 4th to (23); tailings to (42).

21. From (8). One No. 8 jig. 4-sieve Harz jig. Products like (20).

22. From (8). One No. 9 jig. 4-sieve Harz jig. 1st and 2d hutches to (39); 3d and 4th to (23); tailings to (42).

23. From (18), (19), (20), (21), (22), (30), (31), (32), (33), (34). No. 1 unwatering box. Spigot to (25); overflow to (24).

24. No. 1 settling tank with 4 spigots. Spigots to (25); overflow to (41).

25. From (23) and (24). One No. 2 bucket elevator. By distributor to (26).

26. Two pairs of No. 3 rolls, 30 × 14 inches. To (27).

27. From (26) and (28). One No. 3 trommel with 3-mm. round holes. Oversize by No. 3 bucket elevator to (28); undersize to (29).

28. One pair of No. 4 rolls, 24 × 14 inches. To (27).

29. From (27). Two No. 2 hydraulic classifiers with 5 spigots each. 1st spigot to (30); 2d to (31); 3d to (32); 4th to (33); 5th to (34); overflow to (9).

30. Two No. 10 jigs. 4-sieve Harz jigs. 4th discharge to (23); 1st, 2d, 3d and 4th hutches to (39); 4th hutch to (23); tailings (water only) to (42).

31. From (29). Two No. 11 jigs. 4-sieve Harz jigs. Products like (30).

32. From (29). Two No. 12 jigs. 4-sieve Harz jigs. 4th discharge to (23); 1st and 2d hutches to (39); 3d and 4th to (23); tailings (water only) to (42).

33. From (29). One No. 13 jig. 4-sieve Harz jig. Products like (32).

34. From (29). One No. 14 jig. 4-sieve Harz jig. Products like (32).

35. From (9). Three 3-deck convex revolving slime tables. Heads of upper and middle decks to (40); middlings to (9); tailings to (42). Heads of lower deck to (40); middlings by No. 4 bucket elevator to (36); tailings to (42).

36. One No. 4 box classifier. Spigots to (37); overflow to (42).

37. From (10) and (36). Ten 6-foot Frue vanners. Five treat stuff from (10) and five from (36). Heads to (40); tailings to (11).

38. From (11). Four 6-foot and one 4-foot Frue vanners. Heads wheeled to concentrates pile to be shipped to smelter; tailings to (42).

39. From (13), (14), (15), (18), (19), (20), (21), (22), (30), (31), (32), (33), (34). Two No. 2 settling tanks for jig concentrates, used alternately. Settlings to shipping car to go to smelter; overflow to (41).

40. From (35), (37). Two No. 3 settling tanks, for table and vanner concentrates, used alternately. Products like (39).

41. From (16), (24), (39) and (40). No. 4 settling tank. Settlings to concentrates pile to be shipped to smelter; overflow to (42).

42. From (10), (11), (12), (13), (14), (15), (18), (19), (20), (21), (22), (30), (31), (32), (33), (34), (35), (36), (38), (41). Tailings launder to waste.

The power is furnished by two Pelton wheels and a turbine using water from a 6-inch pipe. One Pelton wheel drives the breakers, No. 1 and No. 2 rolls, No. 1 and No. 2 trommels, No. 1 elevator and Nos. 1 to 4 jigs; the other Pelton drives the fine jigging portion including Nos. 8 to 14 jigs; the turbine drives the vanners and tables. A steam engine is used to help when water is low from September to March.

The vanner concentrates contain 50 to 60% lead, the vanner tailings contain about 1½% lead.

It is intended to install 3 Huntington mills for regrinding the fine jig middlings. They are also experimenting on Hallett tables in the place of the slime tables. In some other mills of this district, Wilfley tables are used between the slime tables and vanners. In this mill, however, Wilfleys have been tried and discarded, it having been found preferable to use more vanners.

§ 691. MILL No. 33. LAST CHANCE MILL, WARDNER, IDAHO.—Capacity 75 tons per 24 hours. The mill runs 24 hours per day, 7 days per week. The ore consists of the economic mineral argentiferous galena in coarse and fine crystallization, and a gangue of quartz. The problem is to save the silver and lead. The ore comes down a gravity incline to (1).

1. Receiving bin, holding 100 tons. By gate and chute to (2).

2. One No. 1 Blake breaker, 7 × 11 inches. To (3).

3. From (2) and (4). One pair of No. 1 rolls, 30 × 16 inches. By No. 1 bucket elevator to (4).

4. One No. 1 trommel. Sectional with 7.9 and 12.7-mm. round holes. Over 12.7 mm. to (3); through 12.7 on 7.9 mm. to (10); through 7.9 mm. to (5).

5. From (4) and (15). One No. 2 trommel. Sectional with 3.3 and 5.1-mm. round holes. Over 5.1 mm. to (11); through 5.1 on 3.3 to (12); through 3.3 mm. to (6).

6. Two No. 1 hydraulic classifiers with 3 spigots each. 1st spigots to (13); 2d spigots to (14); 3d spigots not used; overflow to (7).

7. One No. 1 surface current box classifier with 6 spigots. 1st spigot to (9); other spigots not used; overflow to (8).

8. One No. 2 surface current box classifier with 8 spigots. Three spigots to (9); five spigots not used; overflow to (18).

9. From (7) and (8). One No. 1 distributing tank with 2 spigots. Spigots to upper decks of (16).

10. From (4). One No. 1 jig. A 3-sieve Harz jig. 1st and 2d discharges to (17); 3d to (15); 1st and 2d hutches to (17); 3d to (15); tailings to (18).

11. From (5). Two No. 2 jigs. 3-sieve Harz jigs. Products like (10).

12. From (5). Two No. 3 jigs. 3-sieve Harz jigs. Products like (10).

13. From (6). Two No. 4 jigs. 4-sieve Harz jigs. 1st and 2d discharges to (17); 3d not used; 4th to (15); 1st and 2d hutches to (17); 3d and 4th to (15); tailings to (18).

14. From (6). Two No. 5 jigs. 4-sieve Harz jigs. 1st and 2d hutches to (17); 3d and 4th to (15); tailings to (18).

15. From (10), (11), (12), (13), (14). One pair of No. 2 rolls, 20 × 10 inches, set close together. By No. 2 bucket elevator to (5).

16. From (9). Two 2-deck convex revolving slime tables, only one used.

Heads of upper deck to lower deck; tailings to (18). Heads of lower deck to (17); tailings to (18).

17. From (10), (11), (12), (13), (14), (16). Concentrates are wheeled to concentrates bins and thence shipped to smelter.

18. From (8), (10), (11), (12), (13), (14), (16). Tailings launder to waste.

The mill saves about 75 or 80% of the lead and silver in the ore.

§ 692. MILL NO. 34. MORNING MINING COMPANY, MULLAN, IDAHO.—(See Figs. 515*a* and 515*b*.)—Capacity 300 tons in 24 hours. The mill runs 24 hours per day, 7 days per week. The ore consists of the economic minerals argentiferous galena mostly finely disseminated, pyrite and blende and a gangue of massive siderite with some quartz. The problem is to save the silver and lead without the zinc. The ore is brought by a mine tramway 1,800 feet in cars holding 2½ to 3 tons, and then by railroad 3 miles in cars holding 10 tons to (1).

1. No. 1 or receiving bin holding 1,000 tons. By gates and chutes to tram car holding 1½ tons, and thence 150 feet to (2).

2. Two grizzlies with 1½-inch spaces. Oversize to (3); undersize to (4).

3. Two No. 1 breakers, Gates No. 3, crushing to 1½ inches. To (4).

4. From (2) and (3). Two No. 2 bins holding 300 tons each. By two Tulloch feeders to (5).

5. Two pairs of No. 1 rolls, 30 × 14 inches. To (6).

6. From (5) and (8). Two No. 1 bucket elevators. To (7).

7. Two No. 1 trommels with 15-mm. round holes. Oversize to (8); undersize to (9).

8. From (7) and (23). Two pairs of No. 2 rolls, 30 × 14 inches. To (6).

9. From (7). Two No. 2 trommels. Each sectional with 11 and 13-mm. round holes. Over 13 mm. to (14); through 13 on 11 mm. to (15); through 11 mm. to (10).

10. Two No. 3 trommels. Each sectional with 7 and 9-mm. round holes. Over 9 mm. to (16); through 9 on 7 mm. to (17); through 7 mm. to (11).

11. Two No. 4 trommels. Each sectional with 3 and 5-mm. round holes. Over 5 mm. to (18); through 5 on 3 mm. to (19); through 3 mm. to (12).

12. From (11) and (25). Four No. 1 hydraulic classifiers with 5 spigots each. 1st spigot to (20); 2d and 3d to (21); 4th and 5th to (22); overflow to (13).

13. One No. 1 distributing tank with 36 spigots. Nine spigots to each of the four upper decks of (27); overflow to (32).

14. From (9). Four No. 1 jigs. 3-sieve Harz jigs. 1st and 2d discharges to (30); 3d to (23); hutches to (23); tailings to (32).

15. From (9). Four No. 2 jigs. 3-sieve Harz jigs. Products like (14).

16. From (10). Four No. 3 jigs. 3-sieve Harz jigs. 1st and 2d discharges to (30); 3d to (24); hutches to (24); tailings to (32).

17. From (10). Four No. 4 jigs. 3-sieve Harz jigs. Products like (16).

18. From (11). Two No. 5 jigs. 4-sieve Harz jigs. 1st, 2d and 3d discharges to (30); 4th to (24); hutches to (24); tailings to (32).

19. From (11). Two No. 6 jigs. 4-sieve Harz jigs. 1st, 2d and 3d discharges to (30); 4th to (24); 1st, 2d and 3d hutches to (30); 4th to (24); tailings to (32).

20. From (12). Four No. 7 jigs. 4-sieve Harz jigs. Products like (19).

21. From (12). Four No. 8 jigs. 4-sieve Harz jigs. Products like (19).

22. From (12). Four No. 9 jigs. 4-sieve Harz jigs. Products like (19).

23. From (14) and (15). Two No. 2 bucket elevators. To (8).

24. From (16), (17), (18), (19), (20), (21), (22), (26). Two No. 3 bucket elevators. To (25).

25. Two No. 5 trommels with 3-mm. round holes. Oversize to (26); undersize to (12).

26. Two pairs of No. 3 rolls, 30 × 14 inches. To (24).

27. From (13). Four 2-deck convex revolving slime tables. Heads of upper decks to (30); middlings to lower decks; tailings to (32). Heads of lower decks to (30); middlings to (28); tailings to (32).

28. One No. 2 distributing tank with 40 spigots. Spigots to (29); overflow to (32).

29. Seven 4-foot Frue vanners. Heads to (30); tailings to (32).

30. From (14), (15), (16), (17), (18), (19), (20), (21), (22), (27), (29). Ten No. 1 settling tanks for concentrates, holding 150 tons total. Settlings wheeled to railroad cars to go to smelter; overflow to (31).

31. One No. 2 settling tank. Settlings wheeled to railroad cars to go to smelter; overflow to (32).

32. From (13), (14), (15), (16), (17), (18), (19), (20), (21), (22), (27), (28), (29), (31). Waste launder to creek.

This mill is divided into two halves which may be run together or independently.

The mill requires 14 men per 24 hours, divided into 2 shifts of 12 hours each: 2 foremen, 4 jig men, 2 table and vanner men, 2 breaker men, 2 trammers, 1 machinist and 1 assayer. Board costs $30 per month, coal costs $7.25 per ton, and wood costs $3.50 per cord.

Power is furnished by water coming through two ditches 1¼ miles long and a pipe 10 inches in diameter, 3,700 feet long, giving a head of 900 feet. This runs four Pelton wheels. Two of them are 6 feet in diameter, have ¾-inch nozzles and each drives one-half the mill, being rated at 60 horse power apiece. The third is 3 feet in diameter with ½-inch nozzle, rated at 30 horse power, and drives the two rock breakers. The fourth runs a dynamo with a capicty of 75 lights.

The water for the mill is partly the waste from the Pelton wheels delivered at the level of No. 1 trommel, and is partly taken direct.

The crude ore contains 6 to 12% lead and 3 to 5 ounces silver per ton. The concentrates contain 55 to 58% lead and 16 to 20 ounces silver. The tailings contain 1¼ to 2½% lead and 1½ to 3 ounces silver. One hundred tons of ore yield about 12 tons of concentrates and 88 tons of tailings. The mill saves about 75% of the lead and 50% of the silver.

§ 693. MILL NO. 35. UNION MILL OF THE STANDARD MINING COMPANY, WALLACE, IDAHO.—Capacity 250 to 300 tons per 24 hours. The mill runs 24 hours per day, 7 days per week. The ore consists of the economic minerals argentiferous galena, pyrite and blende and a gangue of slate and quartz. The problem is to save the lead and silver without the zinc. The ore is hand picked at the mine into two classes: shipping ore (about 100 tons per day) which goes to smelter, and concentrating ore (about 250 to 300 tons per day) which is hauled 7 miles in automatic side discharge railroad cars, holding 20 tons each, to (1).

1. No. 1 or receiving bins with bottom sloping 45°. By 11 gates and chutes and thence by end dumping car, holding 2,000 pounds, up an incline to (2).

2. One grizzly with 1-inch spaces. Oversize to (3); undersize to (4).

3. One No. 1 breaker, a Gates No. 3, crushing to 1 inch. To (4).

4. From (2) and (3). One No. 2 bin, holding 125 tons. By Tulloch feeder to (5).

5. One pair of No. 1 rolls, 26 × 15 inches, set ½ inch apart. By No. 1 bucket elevator to (6).

6. One No. 1 trommel with 16-mm. round holes. Oversize to (12); undersize to (7).

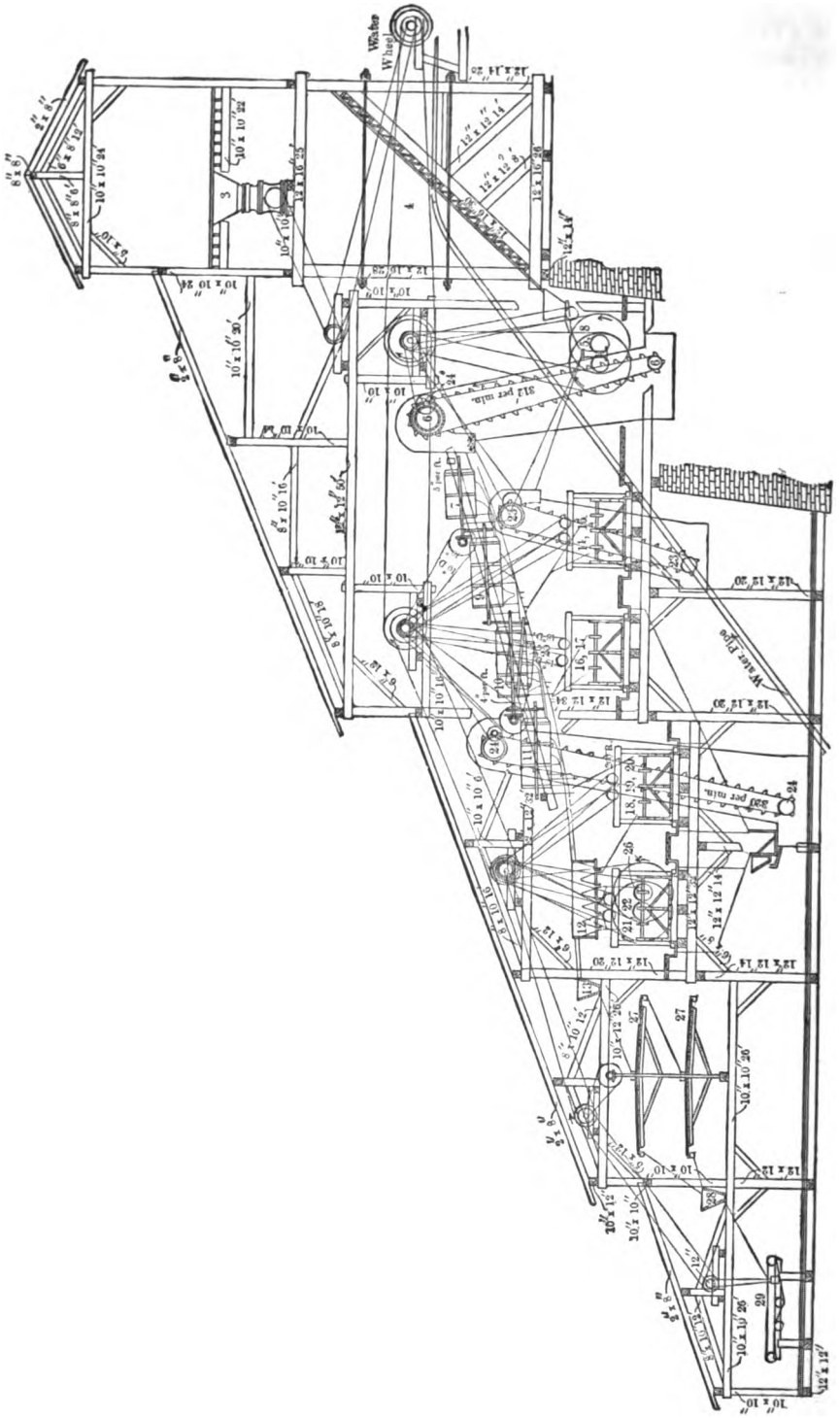

FIG. 515a.—ELEVATION OF MILL 34.

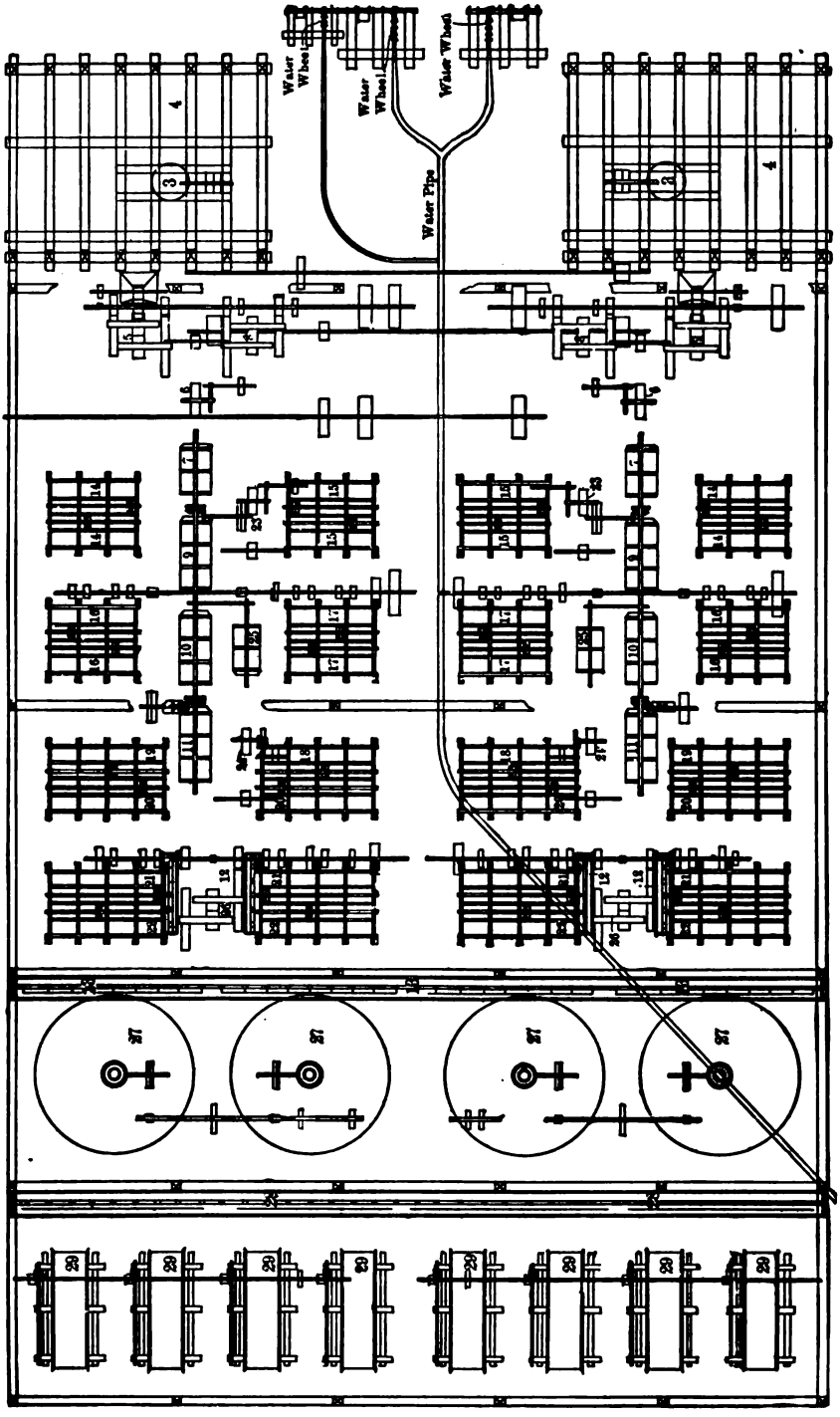

FIG. 515*b*.—PLAN.

7. One No. 2 trommel with 9-mm. round holes. Oversize to (13); undersize to (8).

8. One No. 3 trommel with 5-mm. round holes. Oversize to (14); undersize to (9).

9. One No. 4 trommel with 3-mm. round holes. Oversize to (15); undersize to (10).

10. Two No. 1 hydraulic classifiers, each with four spigots. 1st spigot to (16); 2d to (17); 3d to (18); 4th to (19); overflow to (11).

11. From (10) and (24). One No. 1 whole current box classifier with 24 spigots. Nos. 1 to 6 spigots to upper deck of (28); Nos. 7 to 12 to (29); Nos. 13 to 15 to No. 1 vanner (30); Nos. 16 to 18 to No. 2 vanner (30); Nos. 19 to 21 to No. 3 vanner (30); Nos. 22 to 24 to No. 4 vanner (30); overflow to (36).

12. From (6). Two No. 1 jigs. 3-sieve Harz jigs. 1st and 2d discharges to (31); 3d to (20); 1st hutch to (31); 2d and 3d to (20); tailings to (36).

13. From (7). Two No. 2 jigs. 3-sieve Harz jigs. Products like (12).

14. From (8). Two No. 3 jigs. 3-sieve Harz jigs. Products like (12).

15. From (9). Two No. 4 jigs. 3-sieve Harz jigs. 1st and 2d discharges to (31); 3d to (20); 1st and 2d hutches to (31); 3d to (20); tailings to (36).

16. From (10). Two No. 5 jigs. 2-sieve Collom jigs. 1st discharge to (31); 2d to (20); 1st hutch to (31); 2d to (20); tailings to (36).

17. From (10). Two No. 6 jigs. 2-sieve Collom jigs. Products like (16).

18. From (10). Two No. 7 jigs. 2-sieve Collom jigs. 1st hutch to (31); 2d to (20); tailings to (36).

19. From (10). Two No. 8 jigs. 2-sieve Collom jigs. Products like (18)

20. From (12), (13), (14), (15), (16), (17), (18), (19), (25), (26), (27) One No. 1 unwatering box. Spigot to (21); overflow to (36).

21. From (20) and (23). Two pairs of No. 2 rolls, 26 × 15 inches, set close together. To (22).

22. From (21), (28), (29). One No. 2 bucket elevator. To (23).

23. One No. 5 trommel with 2½-mm. round holes. Oversize to (21); undersize to (24).

24. One No. 2 hydraulic classifier with 3 spigots. 1st spigot to (25); 2d to (26); 3d to (27); overflow to (11).

25. Two No. 9 jigs. 3-sieve Harz jigs. 3d discharge to (20); 1st and 2d hutches to (31); 3d to (20); tailings to (36).

26. From (24). One No. 10 jig. 3-sieve Harz jig. Products like (25).

27. From (24). One No. 11 jig. 3-sieve Harz jig. Products like (25).

28. From (11). One No. 1 convex revolving slime table with 2 decks. Heads of upper deck to (33); middlings to lower deck; tailings to (36). Heads of lower deck to (33); middlings to (22); tailings to (36).

29. From (11). One No. 2 convex revolving slime table with 2 decks. Upper deck not used. Heads of lower deck to (33); middlings to (22); tailings to (36).

30. From (11). Nos. 1 to 4 vanners. 4-foot Frue vanners. Heads to (32); tailings to (36).

31. From (12), (13), (14), (15), (16), (17), (18), (19), (25), (26), (27). No. 1 and No. 2 settling tanks for jig concentrates. Settlings to shipping car to go to smelter; overflow to (34).

32. From (30). No. 3 and 4 settling tanks for vanner concentrates. Products like (31).

33. From (28) and (29). No. 5 settling tank for slime table concentrates. Products like (31).

34. From (31), (32), (33). One No. 6 settling tank. Settlings to shipping car to go to smelter; overflow to (35).

35. One No. 7 settling tank. Settlings to shipping car to go to smelter; overflow to (36).

36. From (11), (12), (13), (14), (15), (16), (17), (18), (19), (20), (25), (26), (27), (28), (29), (30), (35). Tailings launder to waste.

The labor required is 14 men per 24 hours divided into two shifts of 12 hours each: 1 foreman, 2 breaker men, 4 jig men, 2 vanner men and 5 others. Wages range from $3.50 to $5 per day. Board costs $30 per month; wood costs $3.70 per cord.

Power is furnished by water taken from the flume under a head of 80 feet by a pipe 30 inches diameter for 100 feet of length and 24 inches diameter for 20 feet. A 14-inch valve regulates the supply. This drives a Pelton wheel, 6 feet diameter, with two nozzles one 4 inches diameter and one 4½ inches diameter, making 120 revolutions per minute, and developing 110 horse power. This runs the whole mill by a 7½-foot pulley and 20-inch belt. A 6-inch branch pipe from the 24-inch pipe runs a second Pelton wheel 4 feet diameter with a 2-inch nozzle, and developing 10 horse power. This runs the dynamo which makes 1,600 revolutions per minute, generates about 100 amperes at 110 volts, and has a capacity of 100 lights.

Water is brought 11,360 feet from a creek by a flume 4 feet wide, 3 feet deep, and having a fall of 2¼ inches in 100 feet. The water for washing is taken from the flume with 30 feet fall. The total water carried by the flume for power and washing is 187 miner's inches. If we assume a miner's inch to be 1.5 cubic feet or 11.22 gallons per minute, then this is equivalent to 2,098 gallons per minute.

The ore coming to the mill contains 12 to 16% lead, and 17 to 23 ounces silver per ton. The concentrates contain 61 to 65% lead and 75 to 86 ounces silver. The tailings contain 1½ to 2% lead and 4 to 7 ounces silver per ton. One hundred tons of ore yield 20 tons of concentrates and 80 tons of tailings. The mill saves 90% of the lead and 78% of the silver. The total shipments to the smelter in 1898 were 15,350 tons.

This mill has been somewhat changed since the author's visit, and is now said to treat 300 to 400 tons per day.[365] The car in (1) has been replaced by a belt conveyor. A Gates breaker No. 5 has been substituted for the Gates No. 3. The trommels (6) to (9) now have 15, 10, 7 and 3-mm. holes. The fine concentrators now include the slime tables (28) and (29), then two Wilfley tables, a Hallett table, three of the four Frue vanners (30), and finally 52 stationary rectangular inclined canvas tables. The heads of these canvas tables are further concentrated on a Wilfley table. A tailings plant has been installed consisting of a Huntington mill for crushing and four Wilfley tables for concentrating the pulp from the Huntington. The tailings plant is driven by a Pelton wheel 30 inches diameter with five square nozzles under a head of 35 feet.

Owing to the slaty gangue which has a tendency to be ground to clay, the crushing is done dry as far as possible.

§ 694. MILL No. 36. STEM WINDER, KELLOGG, IDAHO.—Capacity 75 tons in 24 hours. The mill runs 24 hours per day, 7 days per week. The ore consists of the economic mineral argentiferous galena and a gangue of quartz. The problem is to save the lead and silver. The ore is brought by a wire rope tramway to (1).

1. Grizzly with 1½-inch spaces. Oversize to (2); undersize to (3).
2. One No. 1 Blake breaker, 7 × 12 inches. To (3).
3. From (1) and (2). No. 1 bin. By sliding block feeder to (4).
4. One pair of No. 1 rolls, 24 × 14 inches. To (5).

5. From (4) and (7). One No. 1 bucket elevator. To (6).
6. One No. 1 trommel with 12.7-mm. round holes. Oversize to (7); undersize to (8).

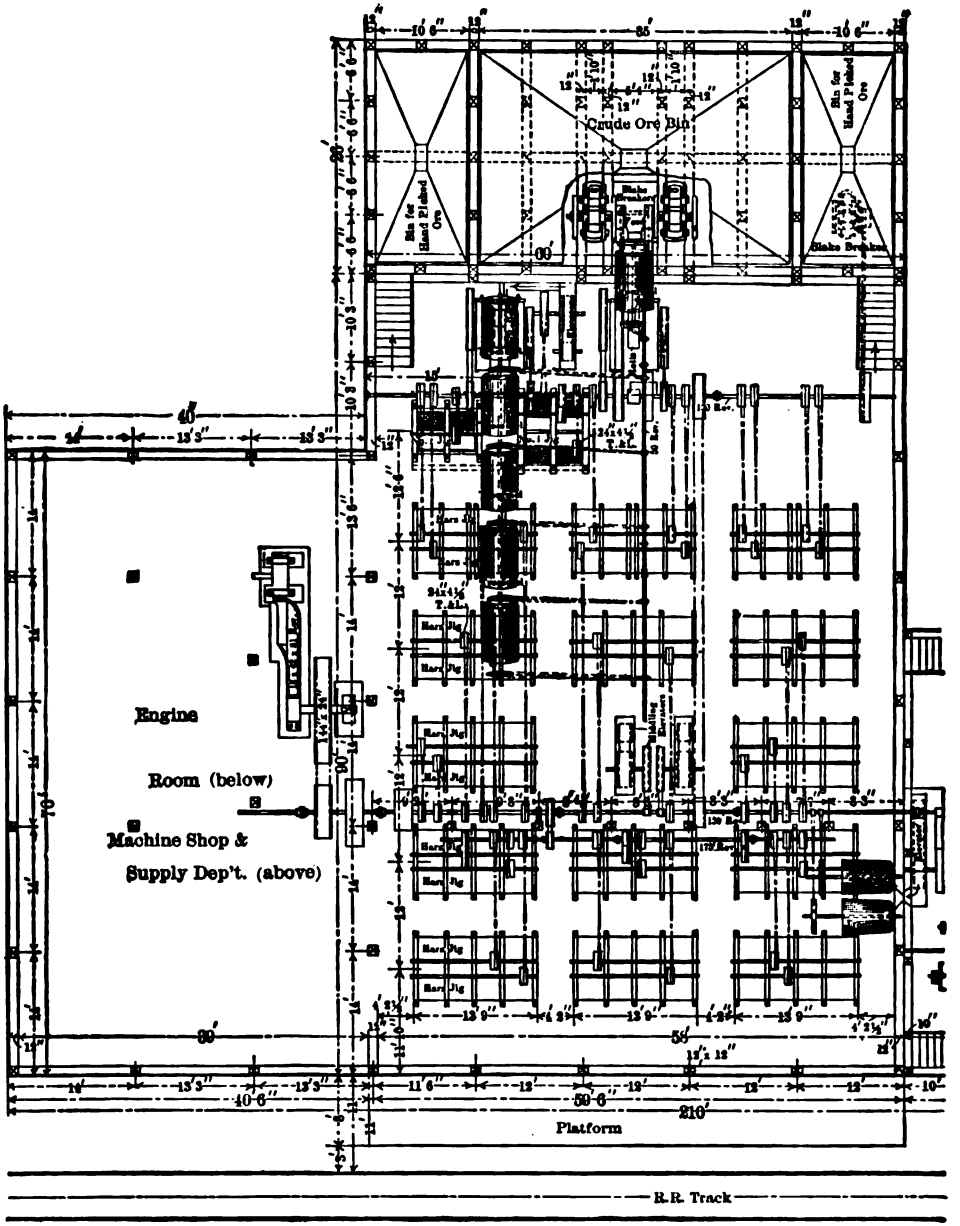

FIG. 516a.—PLAN

7. From (6) and (13). One pair of No. 2 rolls, 20 × 10 inches. To (5).
8. From (6). One No. 2 trommel with 7.9-mm. round holes. Oversize to (13); undersize to (9).

9. From (8) and (19). One No. 3 trommel with 5.1-mm. round holes. Oversize to (14); undersize to (10).

10. One No. 4 trommel with 3.3-mm. round holes. Oversize to (15); undersize to (11).

11. One No. 1 hydraulic classifier with 3 spigots. 1st spigot to (16); 2d to (17); 3d spigot and overflow to (12).

12. One No. 1 surface current box classifier with two spigots. 1st spigot either to (20) or (21); 2d to (22); overflow to (24).

13. From (8). Two No. 1 jigs. 2-sieve Harz jigs. 1st discharge to (23); 2d to (7); 1st hutch to (23); 2d to (7); tailings to (24).

14. From (9). Two No. 2 jigs. 4-sieve Harz jigs. 1st and 2d discharges to (23); 3d and 4th to (18); 1st and 2d hutches to (23); 3d and 4th to (18); tailings to (24).

15. From (10). Two No. 3 jigs. 4-sieve Harz jigs. Products like (14).

16. From (11). Two No. 4 jigs. 4-sieve Harz jigs. 1st and 2d discharges to (23); 4th to (18); 1st and 2d hutches to (23); 3d and 4th to (18); tailings to (24).

17. From (11). Two No. 5 jigs. 4-sieve Harz jigs. 1st and 2d hutches to (23); 3d and 4th to (18); tailings to (24).

18. From (14), (15), (16), (17). One No. 2 bucket elevator. To (19).

19. One pair of No. 3 rolls, 20 × 10 inches. To (9).

20. From (12). One convex revolving slime table. Heads to (21); tailings to (24).

21. From (12) or (20). One No. 1 vanner. A 4-foot Frue vanner. Heads to (23); tailings to (24).

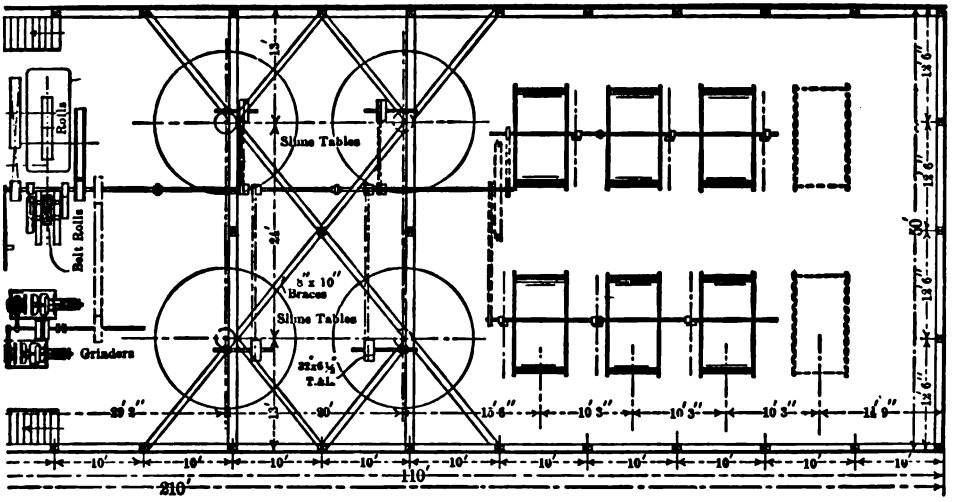

OF MILL 37.

22. From (12). One No. 2 vanner. A 4-foot Frue vanner. Heads to (23); tailings to (24).

23. From (13), (14), (15), (16), (17), (21), (22). Concentrates bins. Shipped to smelter.

24. From (12), (13), (14), (15), (16), (17), (20), (21), (22). Tailings launder to waste.

§ 695. MILL NO. 37. BUFFALO HUMP MINING COMPANY, TIGER & POORMAN BRANCH, BURKE, IDAHO.—The mill as originally designed is shown in Figs. 516*a*-516*g*. Some changes have been made, as will be seen by the outline. Capacity 550 tons in 24 hours. The mill runs 24 hours per day, 7 days per week. The ore consists of the economic minerals argentiferous galena and blende and a gangue of quartz. The problem is to save the silver and lead. First and second class

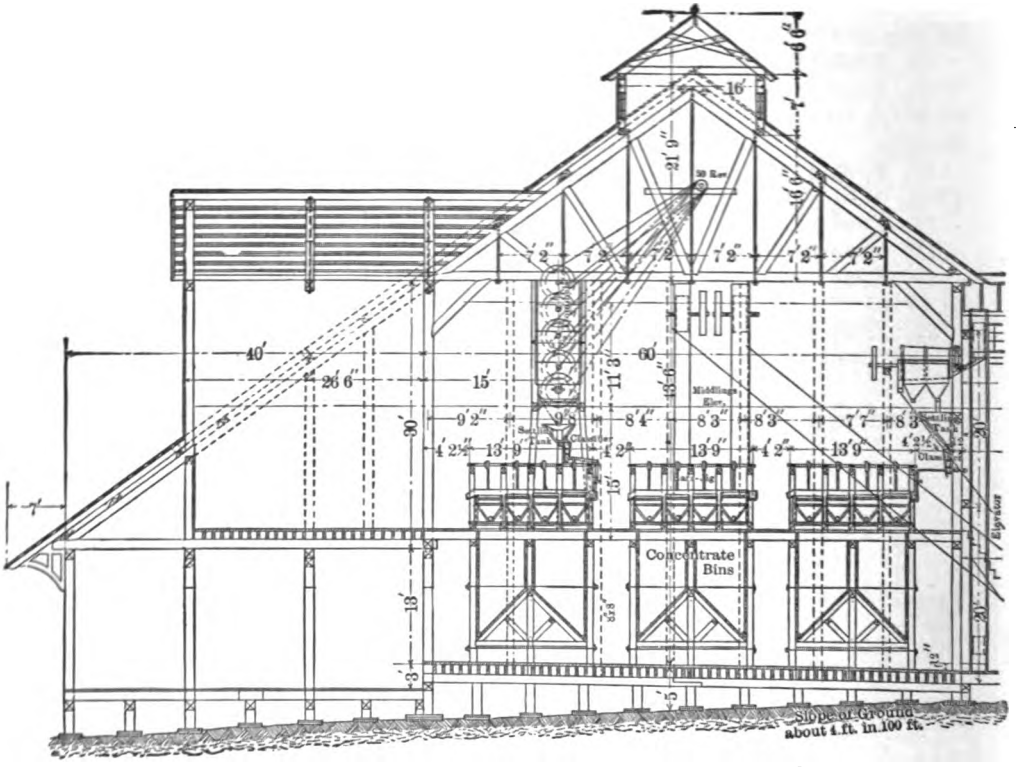

FIG. 516*b*.—ELEVATION

ore are hoisted separately from the mine and brought to the mill in cars, the first class going to (1), and the second class to (5).

1. Picking tables. Smelting ore to (2); residue to (3).
2. No. 1 or shipping ore bin. To smelter.
3. From (1). No. 2 or concentrating ore bins. To (4).
4. Two No. 1 breakers, one Comet C, and one 9 × 15-inch Blake, crushing to 1½ inches. By inclined conveyor to (6).
5. One No. 2 breaker, a Gates No. 6, for second class ore, crushing to 1½ inches. To (6).
6. From (4) and (5). No. 3 or supply bins. By feeder to (7).
7. From (6) and (9). One pair of No. 1 rolls, 26 × 15 inches, set ¾ inch [illegible]. To (8).

8. From (7), (27) and (28). One No. 1 bucket elevator. To (9).
9. One No. 1 trommel, with 25-mm. round holes. Oversize to (7); undersize to (10).
10. One No. 2 trommel with 20-mm. holes. Oversize to (18); undersize to (11).
11. One No. 3 trommel, with 12-mm. holes. Oversize to (19); undersize to (12).
12. One No. 4 trommel, with 10-mm. holes. Oversize to (20); undersize to (13).
13. One No. 5 trommel, with 6-mm. holes. Oversize to (21); undersize to (14).
14. One No. 6 trommel, with 4-mm. holes. Oversize to (22); undersize to (15).
15. Two No. 1 hydraulic classifiers with 4 spigots each. 1st spigot to (23); 2d to (24); 3d to (25); 4th to (26); overflow to (16).
16. From (15) and (32). Two No. 1 box classifiers with two spigots each. 1st spigot to (38); 2d to (39); overflow to (17).
17. From (16) and (40). No. 2 box classifier. Spigot to (41); overflow to (44).
18. From (10). Two No. 1 jigs. 2-sieve sliding-block jigs. 1st discharge and hutch to (42); 2d to (27); tailings to (27).

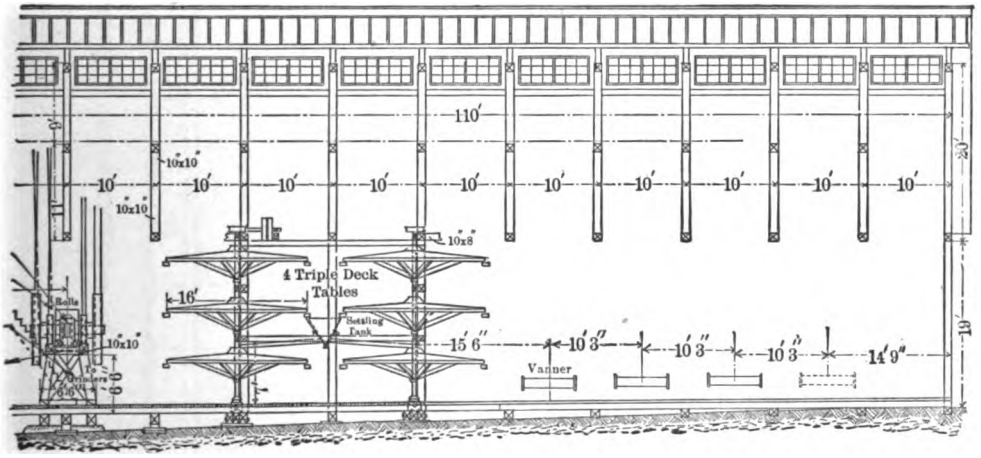

OF MILL 37.

19. From (11). Four No. 2 jigs. 4-sieve Harz jigs. 1st and 2d discharges and hutches to (42); 3d and 4th to (28); tailings to (44).
20. From (12). Four No. 3 jigs. 4-sieve Harz jigs. Products like (19).
21. From (13). Three No. 4 jigs. 4-sieve Harz jigs. 1st and 2d discharges and hutches to (42); 3d and 4th to (29); tailings to (44).
22. From (14). Three No. 5 jigs. 4-sieve Harz jigs. Products like (21).
23. From (15). Three No. 6 jigs. 4-sieve Harz jigs. 1st and 2d discharges and hutches to (42); 3d and 4th to (37); tailings to (44).
24. From (15). Three No. 7 jigs. 4-sieve Harz jigs. Products like (23).
25. From (15). Three No. 8 jigs. 4-sieve Harz jigs. Products like (23).
26. From (15). Three No. 9 jigs. 4-sieve Harz jigs. Products like (23).

27. From (18). One pair of No. 2 rolls, 26 × 15 inches, set ½ inch apart. To (8).

28. From (19) and (20). One pair of No. 3 rolls, 20 × 12 inches, set ¼ inch apart. To (8).

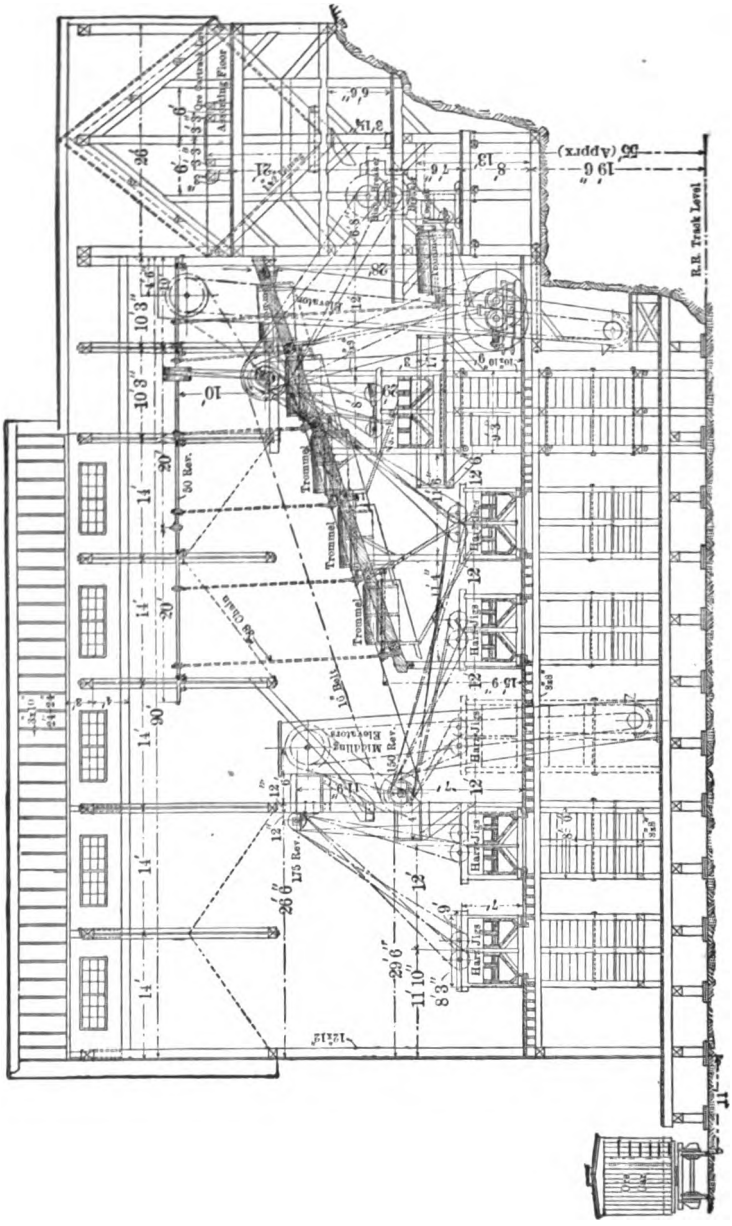
R.R. Track Level
Trommel
Trommel
Trommel
Hard Ore
Hard Ore
Hard Ore

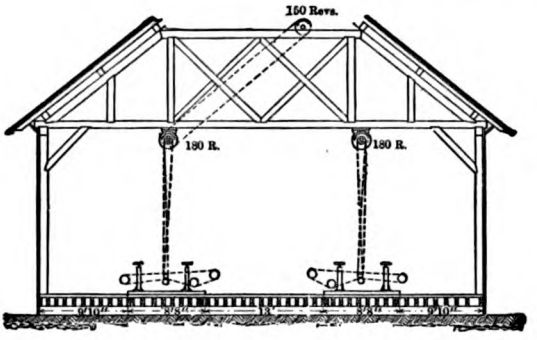

FIG. 516*d*.—CROSS SECTION THROUGH VANNERS.

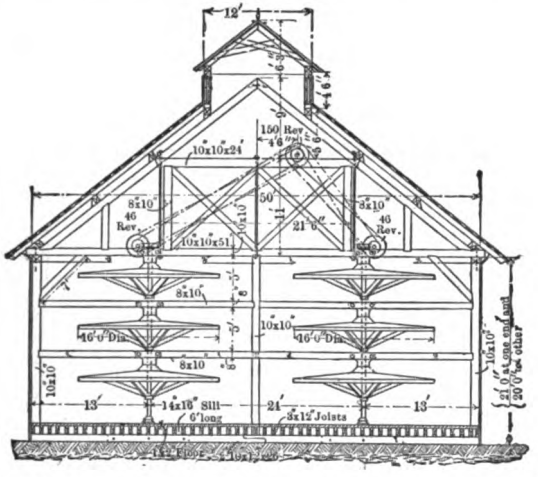

FIG. 516*e*.—CROSS SECTION THROUGH SLIME TABLES.

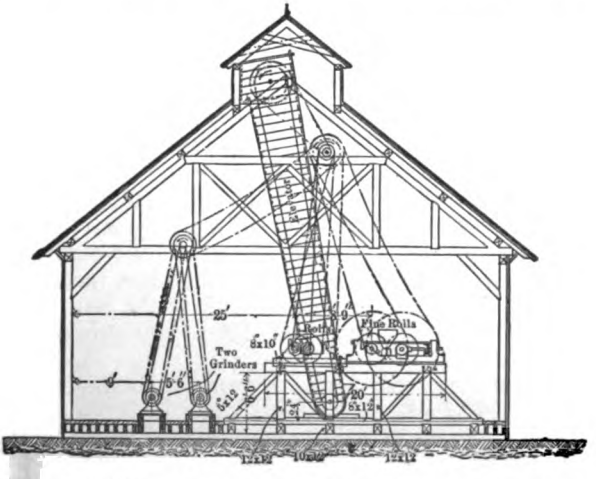

FIG. 516*f*.—CROSS SECTION IN FRONT OF ROLLS.

31. Two No. 7 trommels. Sectional with 3 and 7-mm. holes. Over 7 mm. to (29); through 7 on 3 mm. to (33); through 3 mm. to (32).

32. Two No. 2 hydraulic classifiers with 4 spigots each. 1st and 2d spigots to (34); 3d to (35); 4th to (36); overflow to (16).

33. From (31). Two No. 10 jigs. 4-sieve Harz jigs. Products like (21).

34. From (32). Two No. 11 jigs. 4-sieve Harz jigs. Products like (23).

35. From (32). Two No. 12 jigs. 4-sieve Harz jigs. Products like (23).

36. From (32). Two No. 13 jigs. 4-sieve Harz jigs. Products like (23).

37. From (23), (24), (25), (26), (34), (35) and (36). Two Huntington mills with 30-mesh screens. To (30).

38. From (16). Four 3-deck convex revolving slime tables. Stuff is all fed on upper and middle decks which make heads to (42) and tailings by a V-unwatering box to lower decks which make heads to (42), middlings to (40) and tailings to (44). Overflow of V-box goes to (40).

39. From (16). Six 6-foot Frue vanners. Heads to (42); tailings to (40).

40. From (38) and (39). Centrifugal pump. To (17).

41. From (17). Four Wilfley tables. Heads to (42); middlings returned to same table; tailings to (44).

42. From (18), (19), (20), (21), (22), (23), (24), (25), (26), (33), (34), (35), (36), (38), (39) and (41). No. 1 settling tanks. Settlings are sampled, weighed and wheeled into cars to go to smelter; overflow to (43).

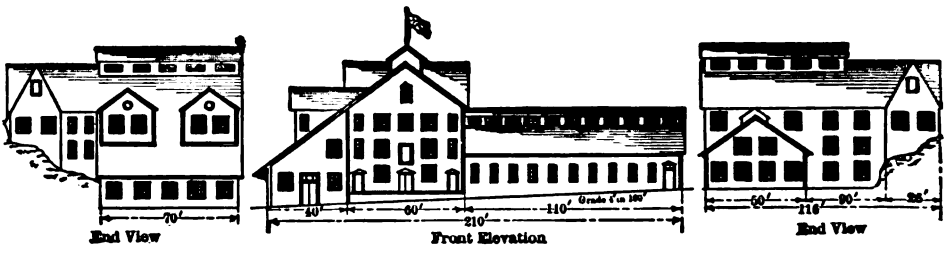

FIG. 516*g*.—EXTERIOR VIEWS OF MILL 37.

43. No. 2 settling tanks. Settlings sampled, weighed and wheeled into cars to go to smelter; overflow to (44).

44. From (17), (19), (20), (21), (22), (23), (24), (25), (26), (33), (34), (35), (36), (38), (41) and (43). Tailings launder. To waste.

The labor required is 12 men by day and 8 by night.

The power is furnished in winter by a Corliss engine with cylinder 18 × 42 inches, making 86 revolutions per minute. In the spring and summer, water power is used supplemented if necessary by the engine.

Crude ore from the mine averages 10% lead, 5% zinc and 5 ounces silver per ton; shipping ore 50% lead and 25 ounces silver; concentrates 56% lead, 9% zinc and 26 ounces silver; tailings 1% lead, 4% zinc and ¾ ounce silver, the extra loss in silver being carried off with the zinc. One hundred tons of ore yield about 13 tons of concentrates. The mill saves about 90% of the lead, 85% of the silver and 25% of the zinc. Monthly shipments are 100 to 300 tons of shipping ore and about 2,200 tons of concentrates.

§ 696. THE NEW HIMMELFAHRT MILL, FREIBERG, SAXONY.[163]—Capacity 150 metric tons in 10 hours. The mill runs 10 hours per day. The ore consists of the economic minerals galena, heavy blende containing 33% iron, pyrite, arsenopyrite and sometimes chalcopyrite, in coarse and fine crystallization, and a gangue either of gneiss or of sometimes a quartzose, sometimes a spathic rock; only the galena is

silver bearing. The problem is to separate all the minerals from the gangue and from each other. At the various shafts a little rich ore and waste are picked out and the residue is hauled to the mill by horses in railroad cars holding 1,100 to 1,200 kilos each, which are lifted by a platform elevator to the receiving floor and dumped to (1).

1. Four hoppers holding 6,000 kilos each. By four feeders to (2).

2. Four riddles with 30-mm. holes, supplied with a stream of water. Oversize to (3); undersize to (4).

3. Four breakers. To (4).

4. From (2) and (3). Two No. 1 trommels with 7, 9, 12 and 16-mm. holes. Over 16 mm. to (5); through 16 on 12 mm. to (20); through 12 on 9 mm. to (21); through 9 on 7 mm. to (22); through 7 mm. to (7).

5. Two picking belts. Galena to (43); pyrite and arsenopyrite to (44); barren rock to (46); residue to (6).

6. Two pairs of No. 1 rolls, 700 × 340 mm. To (7).

7. From (4) and (6). Two No. 2 trommels with 4, 5½, 7 and 9-mm. holes. Over 9 mm. to (8); through 9 on 7 mm. to (23); through 7 on 5½ mm. to (24); through 5½ on 4 mm. to (25); through 4 mm. to (14).

8. From (7) and (29). Two pairs of No. 2 rolls, 700 × 340 mm. To (9).

9. Two No. 3 trommels with 4, 5 and 7-mm. holes. Over 7 mm. to (10); through 7 on 5 mm. to (26); through 5 on 4 mm. to (27); through 4 mm. to (14).

10. Two pairs of No. 3 rolls, 700 × 340 mm. To (11).

11. Two No. 4 trommels with 4-mm. holes. Oversize to (12); undersize to (14).

12. From (11), (20), (21), (22), (23), (24), (25), (26), (27), (30), (31). Two No. 1 bucket elevators. To (13).

13. Thirty gravity stamps arranged in six batteries using a screen with 2-mm. holes. To (14).

14. From (7), (9), (11) and (13). Two No. 5 trommels with 3-mm. holes. Oversize to (30); undersize to (15).

15. Two No. 6 trommels with 2-mm. holes. Oversize to (31); undersize to (16).

16. Two No. 1 pointed boxes with 3 spigots each. 1st spigot to (32); 2d to (33); 3d to (34); overflow by centrifugal pump to (17).

17. Two No. 2 pointed boxes with 9 spigots each. First three spigots to (36); last six spigots to (37); overflow to (18).

18. Two No. 3 pointed boxes with six spigots each. First two spigots to (38); last four spigots to (19); overflow to (49).

19. Two No. 4 pointed boxes with 4 spigots each. Spigots to (39); overflow to (49).

20. From (4). Two No. 1 jigs. 5-sieve Harz jigs. 1st sieve (galena) to (43); 2d and 3d sieves (considerable galena) to (29); 4th and 5th sieves (little galena) to (12); tailings to (46).

21. From (4). Two No. 2 jigs. 5-sieve Harz jigs. Products like (20).

22. From (4). Two No. 3 jigs. 5-sieve Harz jigs. Products like (20).

23. From (7). Two No. 4 jigs. 5-sieve Harz jigs. Products like (20).

24. From (7). Two No. 5 jigs. 5-sieve Harz jigs. 1st sieve (galena) to (43); 2d sieve to (28); 3d sieve (pyrite) to (44); 4th sieve (poor grade pyrite) to (44); 5th sieve (blende middlings) to (12); tailings to (46). When arsenopyrite occurs in the ore, in which case blende is commonly absent, the 3d sieve yields arsenopyrite to (44), and the 4th sieve, pyrite to (44). On the other hand, when blende is present, arsenopyrite is usually absent and the 4th sieve yields blende to (45).

25. From (7). Two No. 6 jigs. 5-sieve Harz jigs. Products like (24).
26. From (9). Two No. 7 jigs. 5-sieve Harz jigs. Products like (24).
27. From (9). Two No. 8 jigs. 5-sieve Harz jigs. Products like (24).
28. From (24), (25), (26), (27). Two No. 9 jigs. 5-sieve Harz jigs. Exact disposition of products unknown but probably the earlier sieves made galena to (43), while the later sieves and tailings go to (29).
29. From (20), (21), (22), (23) and (28). Two No. 2 bucket elevators. To (8).
30. From (14). Two No. 10 jigs. 5-sieve Harz jigs. 1st sieve (galena) to (43); 2d sieve (galena and arsenopyrite or galena and pyrite middlings) to (12); 3d sieve (arsenopyrite and pyrite) to (44); 4th and 5th sieves (pyrite and blende middlings) to (12) or (if blende absent) to (44); tailings to (47).
31. From (15). Two No. 11 jigs. 5-sieve Harz jigs. Products like (30).
32. From (16). Two No. 12 jigs. 5-sieve Harz jigs. Products like (30) except 2d, 4th and 5th sieves to (35).
33. From (16). Two No. 13 jigs. 5-sieve Harz jigs. Products like (32).
34. From (16). Two No. 14 jigs. 5-sieve Harz jigs. Products like (32).
35. From (32), (33) and (34). Two No. 15 jigs. 5-sieve Harz jigs. Exact disposition of products unknown but probably galena to (43); pyrite and arsenopyrite to (44); blende to (45); tailings to (47).
36. From (17). No. 16 jigs. Two series, each containing three Bilharz oblong movable sieve jigs. 1st jig (if galena) to (43); or (if galena middlings) returned to same jig; 2d jig (pyrite) to (44); 3d jig (blende) to (45); tailings to (49).
37. From (17). No. 17 jig. A Bilharz circular movable sieve jig with six sieves. All the sieves make hutches to (40) and tailings to (49).
38. From (18). Two No. 18 jigs. Bilharz oblong movable sieve jigs. Concentrates to (41); tailings to (49).
39. From (19). Four No. 1 Stein tables. Galena to (43); galena middlings to (42); pyrite to (44); blende middlings (if blende is present) to (42); tailings to (49).
40. From (37). Six No. 2 Stein tables. Products like (39).
41. From (38). Two No. 3 Stein tables. Products like (39).
42. From (39), (40) and (41). Two No. 4 Stein tables. Exact destination of products unknown but probably galena to (43); pyrite to (44); blende to (45); tailings to (49).
43. From (5), (20), (21), (22), (23), (24), (25), (26), (27), (28), (30), (31), (32), (33), (34), (35), (36), (39), (40), (41) and (42). Store bins for galena. The coarse stuff is stamped by 20 gravity stamps so that it will all pass through a sieve with 10 meshes per linear inch. The stuff is smelted for lead and silver.
44. From (5), (24), (25), (26), (27), (30), (31), (32), (33), (34), (35), (36), (39), (40), (41) and (42). Store bins for pyrite and arsenopyrite. These are roasted separately and the sulphur and arsenic used for making sulphuric acid and arsenical compounds and the residues are used as a flux for the smelter.
45. From (24), (25), (26), (27), (35), (36) and (42). Store bins for blende. This goes to market.
46. From (5), (20), (21), (22), (23), (24), (25), (26) and (27). No. 3 bucket elevator lifting to No. 7 trommel which makes such sizes of the tailings as the purchasers desire.
47. From (30), (31), (32), (33), (34) and (35). Unwatering box. Settlings by No. 4 bucket elevator to No. 7 trommel; overflow to (48).
48. No. 1 settling tank. Settlings by scraper to No. 4 bucket elevator; overflow repumped back into the mill as clear water.

49. From (18), (19), (36), (37), (38), (39), (40), (41) and (42). No. 2 settling tanks. Three tanks having total area of 900 square meters. Settlings to waste; overflow repumped back into the mill as clear water.

The labor required is 53 men, which may be put under three heads: (*a*) *General Superintendence*—2 head overseers and 2 assistant overseers; (*b*) *Coarse Division*—2 men at foot of platform elevator, 2 men at top, 2 men at breakers, 8 to 10 boys or old men at picking belts, 1 man on the middle story, 4 men wheeling stuff on the lower story, 1 man on stamps, 1 overseer, 1 engineer for mill engine, 1 fireman and 1 blacksmith; (*c*) *Medium and Fine Division*—2 men on jigs Nos. 10 to 15 inclusive, 4 men shoveling, 2 men wheeling, 2 men on the rest of the jigs, 4 men on the Stein tables, 4 men wheeling table stuff, 3 men wheeling waste, 1 carpenter and 1 overseer.

The power is furnished by a compound engine working under a steam pressure of 110 pounds per square inch, making 70 revolutions per minute, with high pressure cylinder 390 × 800 mm. and low pressure cylinder 640 × 800 mm., indicating 105 horse power. There are 3 boilers which run the mill engine, the platform elevator (8 horse power), the electric lighting apparatus (20 horse power) and the 20 stamps for galena (10 horse power). The power required for the individual machines is as follows: shafting and friction, 6; 4 breakers, 16; 2 No. 1 trommels, 0.8; 2 picking belts, 1; 2 pairs No. 1 rolls, 8; 2 No. 2 trommels, 0.6; 2 No. 2 rolls, 7; 2 No. 3 trommels, 0.5; 2 pairs No. 3 rolls, 6; 2 No. 4 trommels, 0.4; 2 No. 1 elevators, 0.6; 2 No. 2 elevators, 0.6; 30 stamps, 12; 4 No. 1 and No. 2 jigs, 2; 14 No. 3 to No. 9 jigs, 7; 4 No. 5 and No. 6 trommels, 0.6; 12 No. 10 to No. 15 jigs, 7; 1 large pump for water, 4; 1 small centrifugal pump, 2; 2 No. 3 and No. 4 elevators, 0.8; 2 centrifugal pumps for slimes, 4; 1 centrifugal pump for clear water, 1; 1 No. 17 jig, 1; 14 tables, 2.8; 8 No. 16 and No. 18 jigs, 1.2; total 92.9 horse power. A second engine with cylinder 230 mm. diameter × 350 mm. long, developing 20 horse power when running at 160 to 200 revolutions per minute under a steam pressure of 110 pounds, and cutting off at ¼ stroke, furnishes power for running the dynamo. There are 110 incandescent lamps of 16 candle power each, and 6 arc lamps of 1,000 candle power each.

Water is brought to the mill by a ditch and is stored in a reservoir holding 10,000 cubic meters. The mill receives 1 cubic meter (264.19 gallons) per minute. Part of this is used by the boilers and the remainder passes through the condenser and thence to the mill. In addition to the fresh water supply there are also 0.950 cubic meter per minute obtained from the settling tanks.

The galena carries 0.15 to 0.17% and sometimes 0.20% silver. The tailings of jigs No. 1 to No. 15 average 0.005% silver, 8 to 10% sulphur and 9 to 12% zinc; those of No. 16 and No. 18 jigs, 0.001% silver, 2% sulphur and 4% zinc; those of No. 17 jig, 0.002% silver, 8% sulphur and 8% zinc; those of the tables, 0.003% silver, 1% lead, 12% sulphur and 9% zinc; the settlings in No. 2 settling tanks give 0.01% silver, 2% lead, 8% sulphur and 6% zinc. The overflow of the settling tanks contains 0.227 kilo of solid matter per cubic meter which averages 0.01% silver, 10% sulphur and 9% zinc.

The especial points to be noted about this mill are that it is modern, having been put in operation in October, 1889; that the ore passes along continuously and automatically throughout; that the mill is divided into two sections for treating two classes of ore independently if necessary; that it employs graded treatment; that all the trommel oversizes are recrushed, this being rendered necessary by the sending of middlings back into the main system.

§ 697. MILL AT LAURENBURG ON THE LAHN IN PRUSSIA.[145]—(See Figs. 517*a* and 517*b*.)—Capacity 200 tons in 10 hours. The ore consists of the economic minerals galena, blende and chalcopyrite, and a gangue of quartz and siderite.

The country rock is graywack. The problem is to save the lead, zinc and copper separately. The ore is hoisted up an inclined plane to (1).

Breaking and Picking Building.

1. One grizzly with 150-mm. spaces. Oversize by hopper and feeder to (2); undersize to No. 1 bin (5).
2. One No. 1 jaw breaker crushing to 75 or 80 mm. To (3).

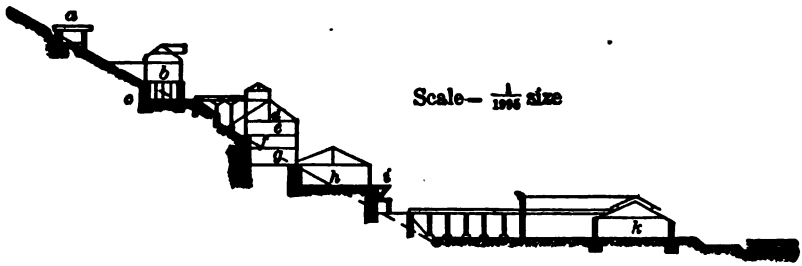

FIG. 517*a*.—ELEVATION OF MILL AT LAURENBURG.

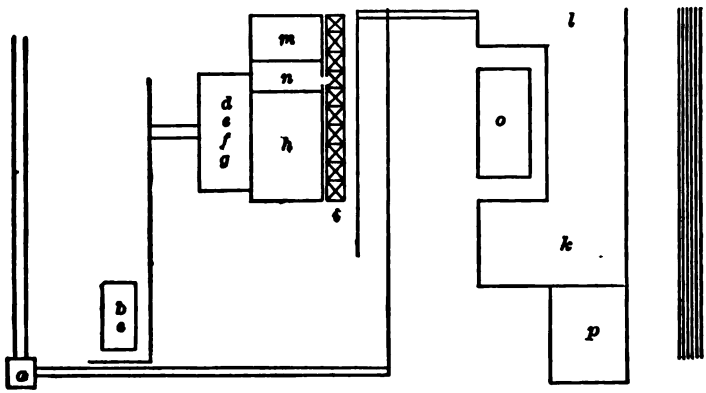

FIG. 517*b*.—PLAN.

LEGEND FOR FIGS. 517*a* AND 517*b*.

a. Hoist.
b. Breaking and picking building.
c. Storage bins.
d. Rock breaker floor.
e. Picking and coarse rolls floor.
f. Medium and fine rolls and coarse jigs floor.
g. Medium jigs and stamp floor.
h. Fine jigging building.
i. Large *spitzkasten*.
k. Slimes division.
l. Slimes division for old tailings.
m. Rollers.
n. Engine.
o. Engine.
p. Workshops.

3. One No. 1 shaking screen with 25-mm. holes. Oversize to (4); undersize to No. 2 bin (5).
4. One circular revolving picking table. Galena to smelter; blende to market; chalcopyrite to smelter; some rich complex material to be cobbed in the same room; concentrating ore to No. 3 bin (5); siderite to market; barren rock to waste dump.
5. From (1), (3), (4). No. 1, 2 and 3 bins. Material is wheeled over a trestle to (6).

Rock Breaker Floor.

6. Four No. 4 bins. To (7).

7. Four No. 2 shaking screens with 25-mm. holes. Oversize to (8); undersize to (9).

8. Four Kley jaw breakers, 220 × 440 mm., crushing to between 30 and 60 mm. To (9).

Picking and Coarse Rolls Floor.

9. From (7) and (8). Two No. 1 trommels. Sectional with six sizes of holes ranging from 25 (?) mm. to 7 mm. Over 25 (?) mm. to (10); sizes between 25 (?) mm. and 7 mm. separately to (12); under 7 mm. to (13).

10. Two circular picking tables. Galena to smelter; blende to market; chalcopyrite to smelter; siderite to market; concentrating ore by two shaking feeders to (11); barren rock to waste dump.

11. Two pairs of No. 1 or coarse rolls, crushing to 10 or 12 mm. To (13).

Medium and Fine Rolls and Coarse Jigs Floor.

12. From (9). Twelve No. 1 or coarse jigs. Two rows of 5-sieve jigs treating various sizes from (9). Galena to smelter; rich galena-blende middlings to be rejigged on separate jigs; rich blende middlings to (16); poor middlings to (14); tailings to waste.

13. From (9), (11). Two No. 2 trommels. Sectional with four sizes of holes ranging from 9 (?) mm. to 4 mm. Over 9 (?) mm. by bucket elevator to (14); sizes between 9 (?) and 4 mm. separately to (20); under 4 mm. to (23).

14. From (12), (13). Two pairs of No. 2 or medium rolls, crushing to about 6 mm. To (18).

15. From (21). Two pairs of No. 3 or fine rolls crushing to about 4 mm To (19).

16. From (12), (20). One pair of No. 4 or blende rolls, crushing to 4 mm. To (17).

17. One No. 3 trommel. Sectional with four sizes of holes ranging from 4 mm. to 1 mm. Coarse sizes to jigs, the exact location of which is not known to the author, but they are probably among the fine jigs (25); under 1 mm. to (24).

Medium Jigs and Stamp Floor.

18. From (14). Two No. 4 trommels. Sectional with three sizes of holes ranging from 7 mm. to 4 mm. Over 7 mm. to (21); sizes between 7 and 4 mm. separately to (25); under 4 mm. to (23).

19. From (15). Two No. 5 trommels with 4-mm. holes. Oversize to (22); undersize to (23).

20. From (13). Eleven No. 2 or medium jigs. Two rows of 5-sieve jigs treating various sizes from (13). Galena to smelter; rich galena-blende middlings to be rejigged on separate jigs; rich blende middlings to (16); poor middlings to (21); stamp material to (22); tailings to waste.

21. From (18), (20). Elevator to (15).

22. From (19), (20), (25), (26). Twenty gravity stamps crushing to about 1½ mm. To (23).

Fine Jigging Building.

23. From (13), (18), (19), (22). Four (?) sets of trommels with three in series in each set, having 3, 2, and 1-mm. holes. Oversizes to (25); final undersize to (24).

24. From (17), (23). Two classifiers. Spigots probably to (25); overflow to (29).

25. From (18), (23), and (24). Twenty-five No. 3 or fine jigs. Galena to smelter; some middlings to be rejigged; some middlings to (28); some middlings to (22); tailings to (26).

26. *Spitzkasten.* Spigots back to some of the fine jigs (25) yielding an enriched product to (22) and tailings to waste; overflow to (27).

27. *Spitzkasten.* Spigots to six Stein tables, the exact products of which are not known to the author; overflow to (29).

28. From (25). Two bumping tables. Exact products unknown to the author.

Large Spitzkasten.

29. From (24), (27) and also all the slime water which comes from the unwatered tailings of the previous machines. Ten large *spitzkasten,* half of them for galena slimes and half for blende slimes. Spigots to (30); overflow clear water to be used over in the mill.

Slimes Division.

30. From (29), (32), (33), (34), (35). Sixteen small *spitzkasten* in a double row. Spigots to (31); overflow to (38).

31. Four compound Stein tables each made up of four single tables. Galena to smelter; rich middlings to (32); poor middlings to (32); tailings to (32).

32. Four *spitzkasten,* one for rich middlings, one for poor middlings, and two for tailings. Spigots separately to (33); overflow to (30).

33. Four compound Stein tables each made up of four single tables. Galena or blende concentrates, not quite rich enough to ship, are removed by hand and enriched on Stein or Schranz tables; rich middlings by centrifugal pump to (34); poor middlings by centrifugal pump to (30); tailings by centrifugal pump to (34).

34. From (33) and (35). Two *spitzkasten,* one for rich middlings and one for tailings. Spigots separately to (35); overflow to (30).

35. Two compound Stein tables each made up of four single tables, one table for rich middlings and one for tailings. Products like (33) except tailings to (36).

36. Two *spitzkasten.* Spigots to (37); overflow to (38).

37. Four Stein tables. Concentrates to smelter; tailings sand to waste; tailings water to (38).

38. From (30), (36), (37). Settling basin outside the mill. Settlings are waste; water probably used over again.

The overflows from the concentrates boxes of the tables are settled in a series of tanks yielding settlings which go to their proper destination according to quality, and overflow which is clear water to be used over in the mill.

Slime Division for Old Tailings.

Old tailings are now being worked over. They are first shoveled to a launder having 3-mm. holes at its end. What passes through is elevated by a bucket wheel to a classifier which yields coarse stuff to be treated on a sand jig and fine stuff to *spitzkasten,* etc., just as in the other slime division.

The labor required is about 130 men and boys in 10 hours. There are 8 boys in the present slime division and 9 men in the slime division for old tailings.

This mill was erected about 1893. In a general way the treatment of galena material is done separately from that of blende material especially in the finer part of the mill. The article from which the preceding outline has been made does not indicate clearly the exact arrangement of the machines in some parts

of the mill, and therefore the author can not be sure that the outline is correct in every point, although to the best of his knowledge and belief it is so.

Power for the breaking and picking building is furnished by a 35-horse power engine; for the main washing buildings by a 300-horse power compound engine; and for the slimes division by a 60-horse power engine.

§ 698. THE ORE DRESSING MILL AT CLAUSTHAL, GERMANY.[53]—(See Figs. 518*a* and 518*b*.)—Capacity about 275 tons per day. The coarse divisions of the mill down to and including the coarse jigs run 11 or 12 hours per day, while the fine divisions run 24 hours per day.

The ore consists of the economic minerals galena, blende, copper pyrites and iron pyrites and a gangue of quartz, calcite, slate and graywack. The problem is to save the lead, zinc and copper separately. In the upper levels oxidized ores of lead and zinc were found. The character of the ore has changed in recent years, the proportion of blende having greatly increased, as may be seen by reference to the products given on page 973.

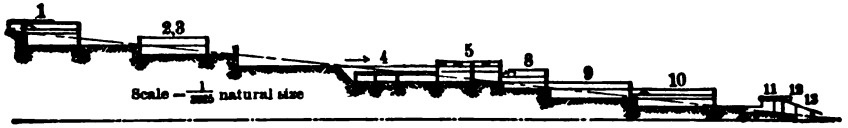

FIG. 518*a*.—ELEVATION OF ORE DRESSING WORKS AT CLAUSTHAL.

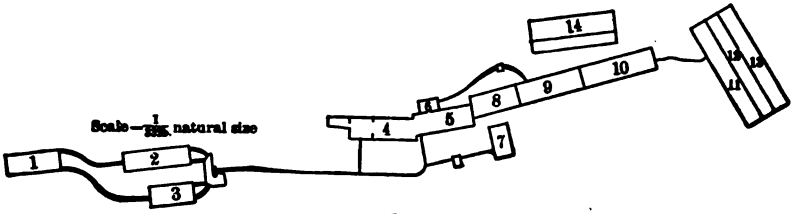

FIG. 518*b*.—PLAN.

LEGEND FOR FIGS. 518*a* AND 518*b*.

1. Breaker house.
2. Dry cobbing house.
3. Wet cobbing house.
4. Small picking house.
5. Coarse trommel house.
6. Fine trommel house.
7. Coarse rolls house.
8. Coarse jigs house.
9. Medium and fine rolls house.
10. Medium and fine jigs house.
11. Gravity stamp house.
12. Sand washing house.
13. Slime washing house.
14. Auxiliary washing house.

The old stamp mills X., XI., and XII. are not shown.

In early times the ore at this place was treated in several small, isolated stamp mills. In 1871 and 1872 the present central establishment was erected and three of the old stamp mills (X., XI. and XII.) are used to treat certain products of the main mill.

In the mine all the fine ore, except that from poor parts of the mine, is hoisted directly. Coarse stuff up to 100 mm. size is hand picked to remove waste, which is kept in the mine. Coarse stuff above 100 mm. size, unless its appearance is such as to show that mineral is finely disseminated through it, is broken by sledges and picked over to remove waste. The chutes for ore have a grating over them which has holes 250 or 300 mm. in diameter, to prevent anything coarser than this size from leaving the mine. All kinds of ore are hoisted together and go to the grizzlies in the breaker house.

Since this mill uses the non-continuous system, there being, just following the two cobbing houses, large storage banks for piling up the different kinds of material picked out in these houses, and since for this and other reasons it is somewhat complicated, the author has thought it best to depart from the usual form and to use the graphical scheme in describing it, (see pages 966 to 972).

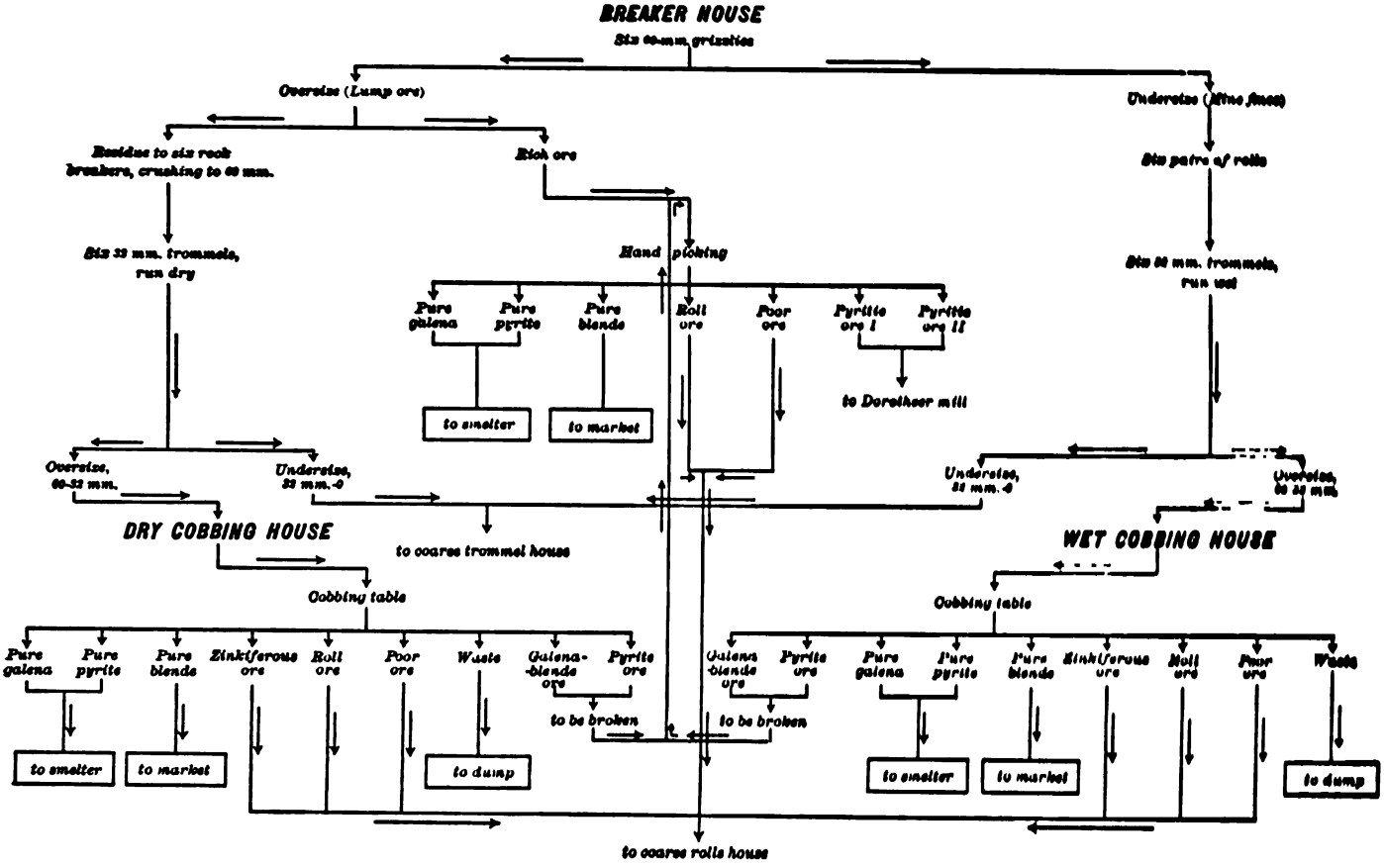

CLAUSTHAL MILL SCHEME.

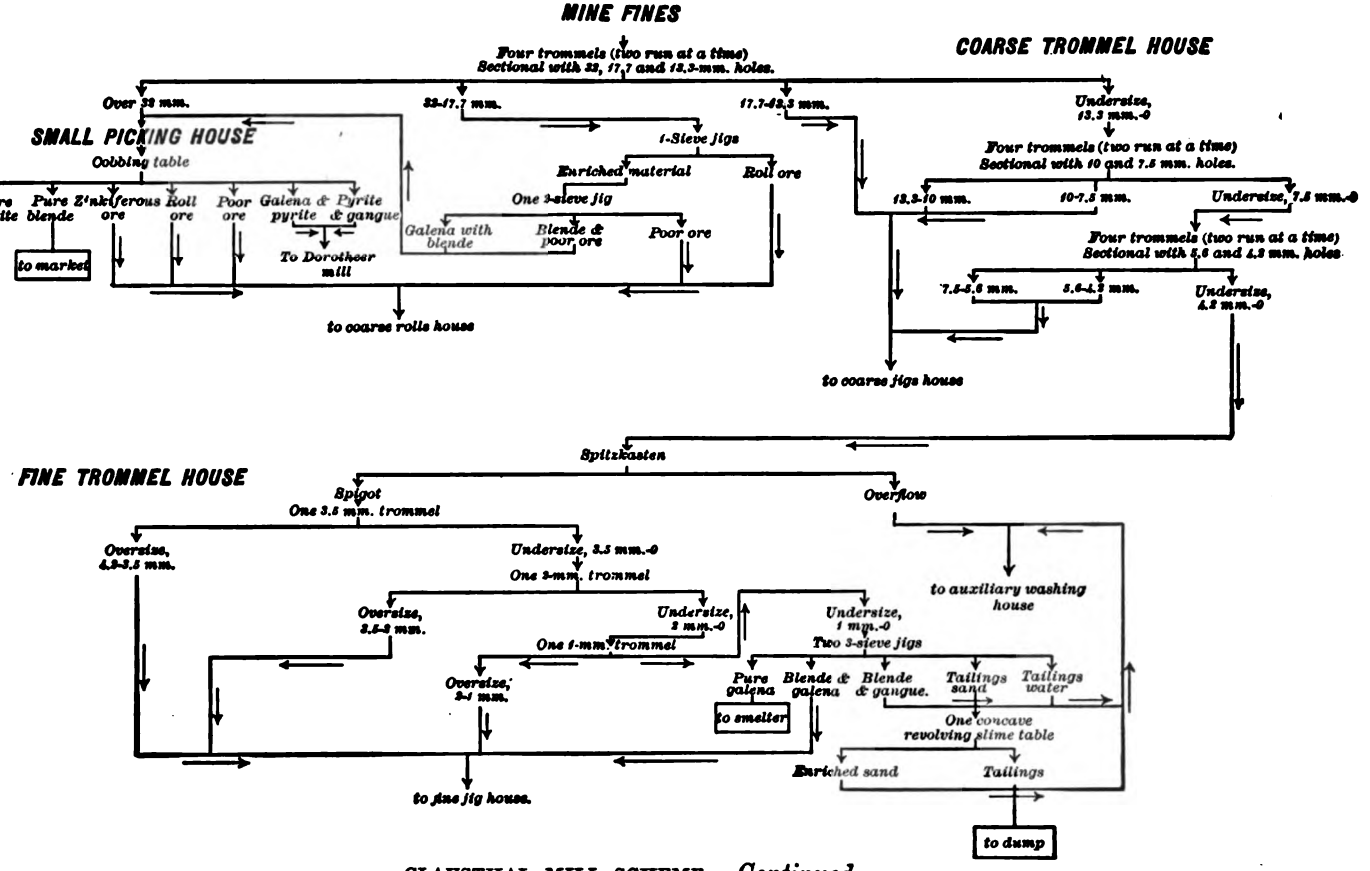

CLAUSTHAL MILL SCHEME.—*Continued.*

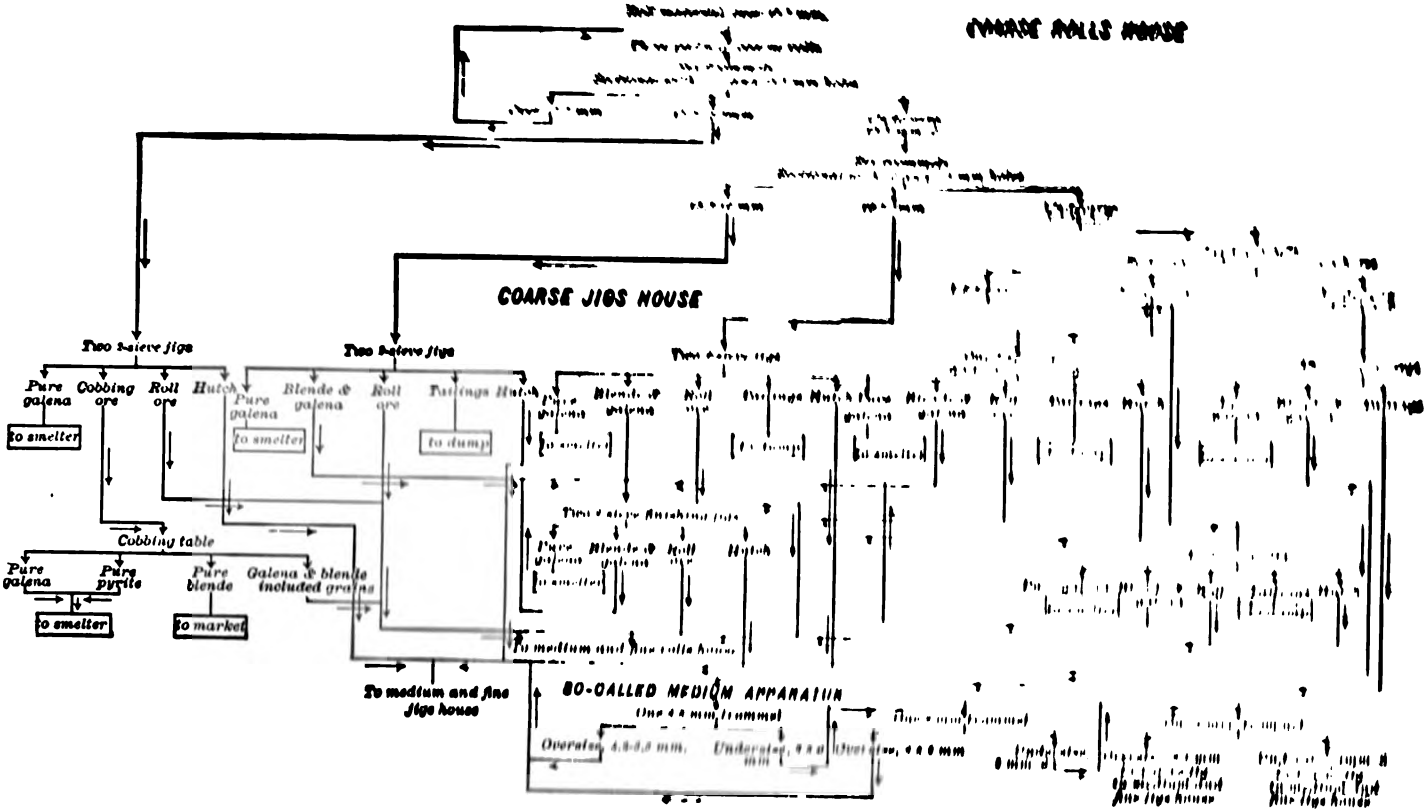

CLAUSTHAL MILL BUILDING.—(Continued.)

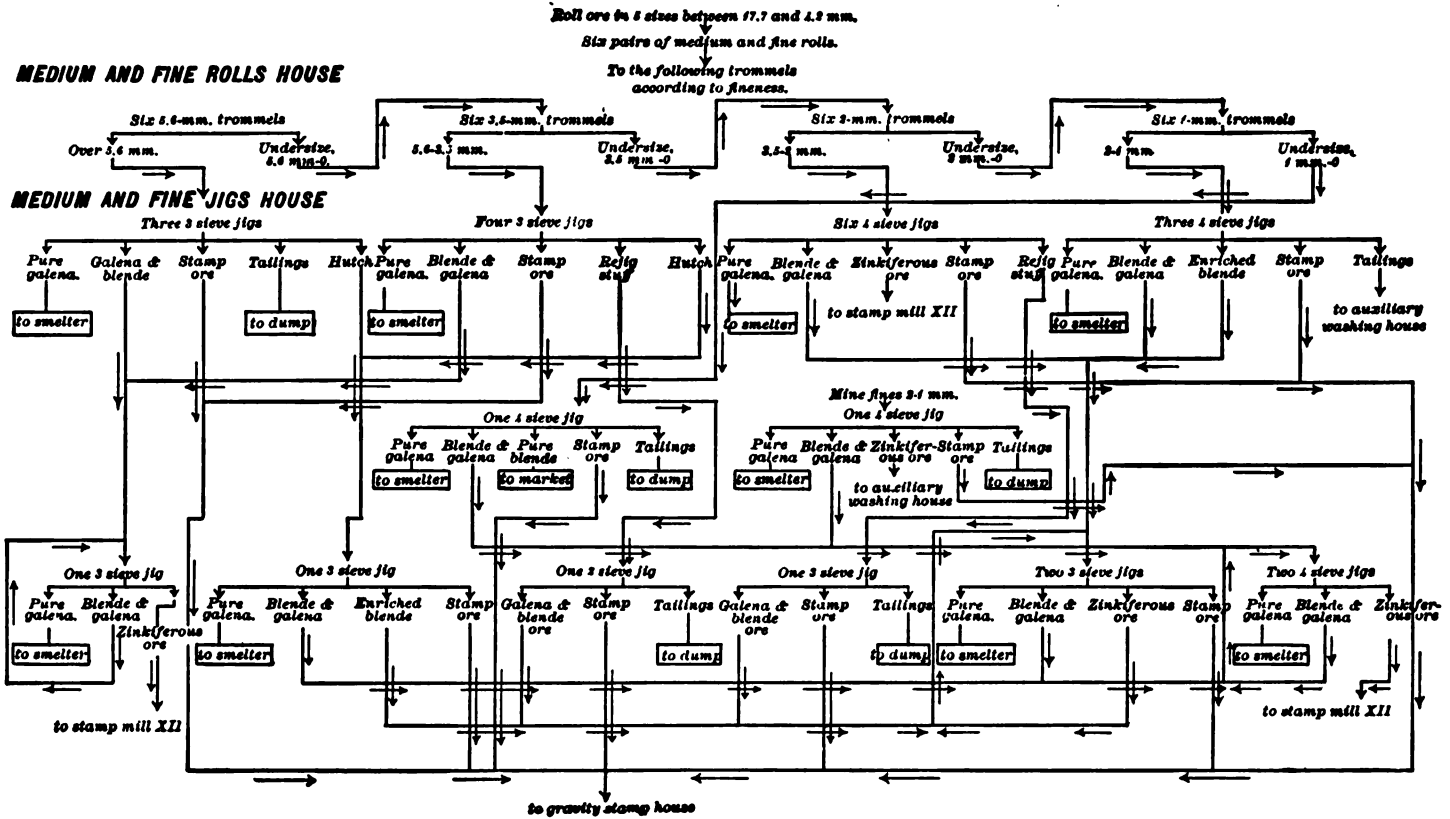

CLAUSTHAL MILL SCHEME.—*Continued.*

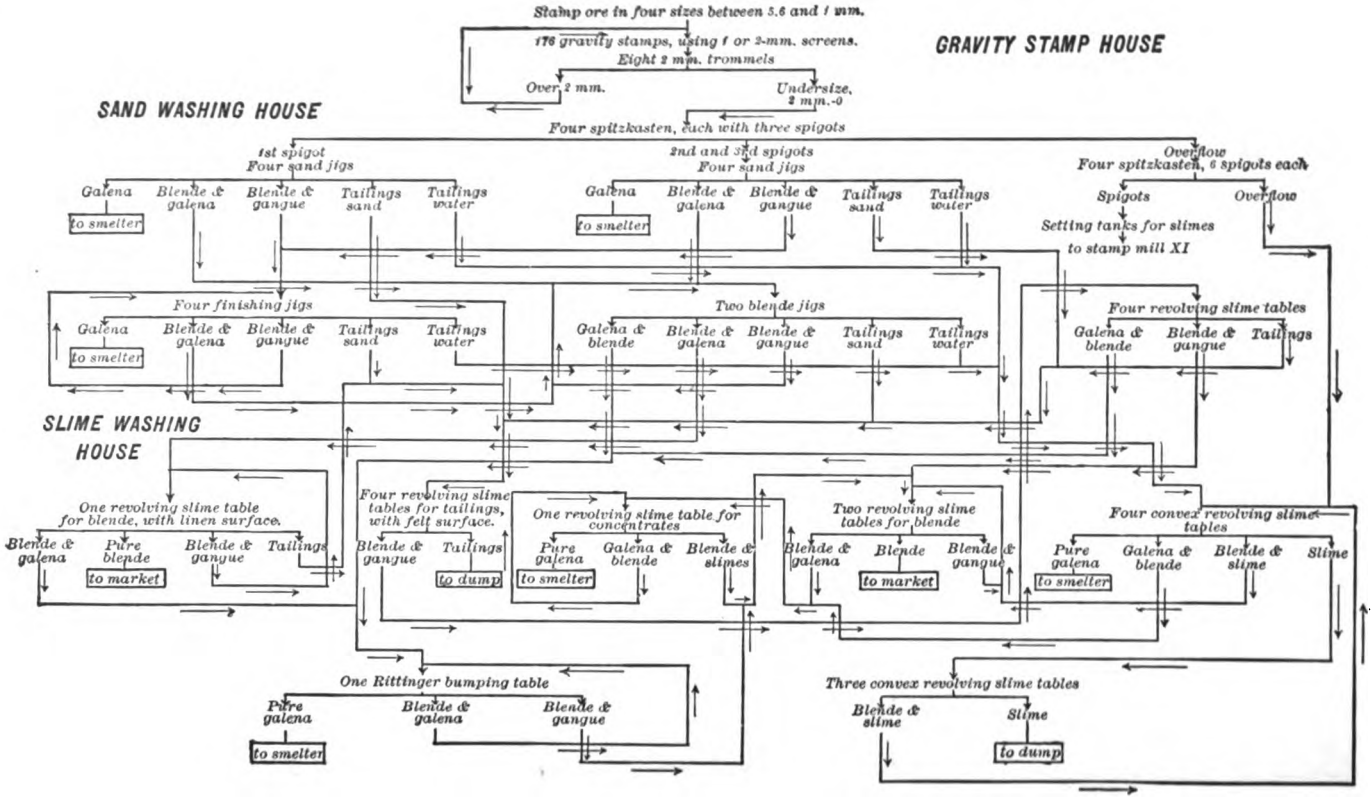

CLAUSTHAL MILL SCHEME.—*Continued.*

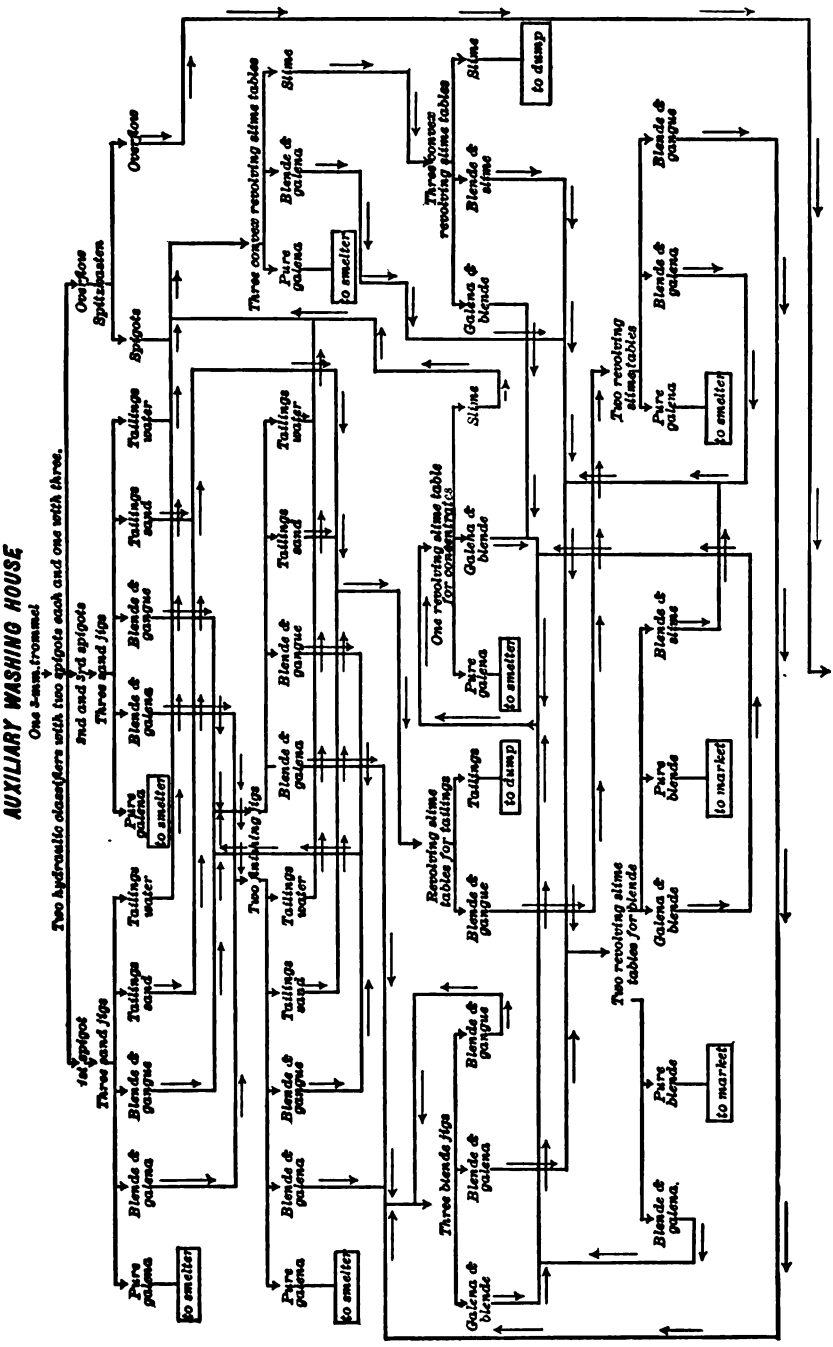

CLAUSTHAL MILL SCHEME.—*Continued.*

Digitized by Google

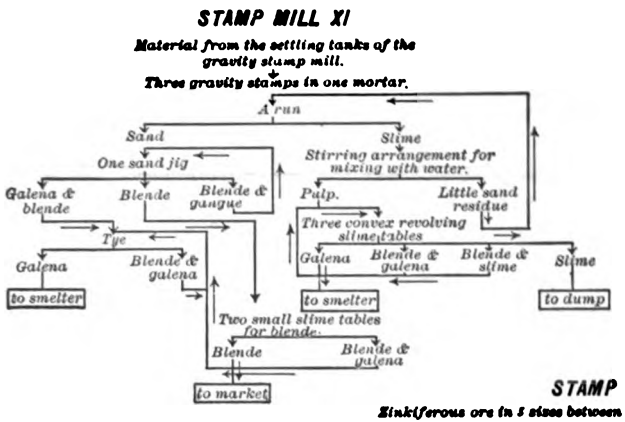

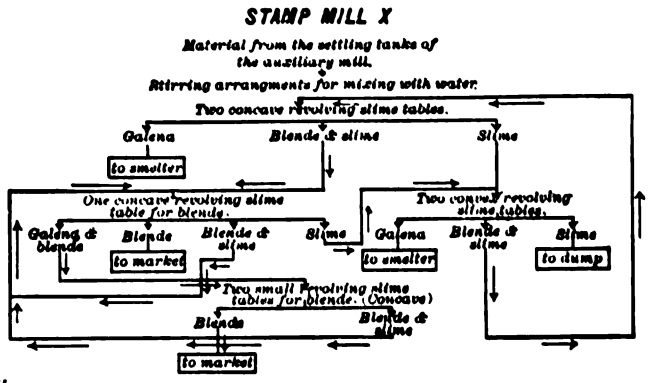

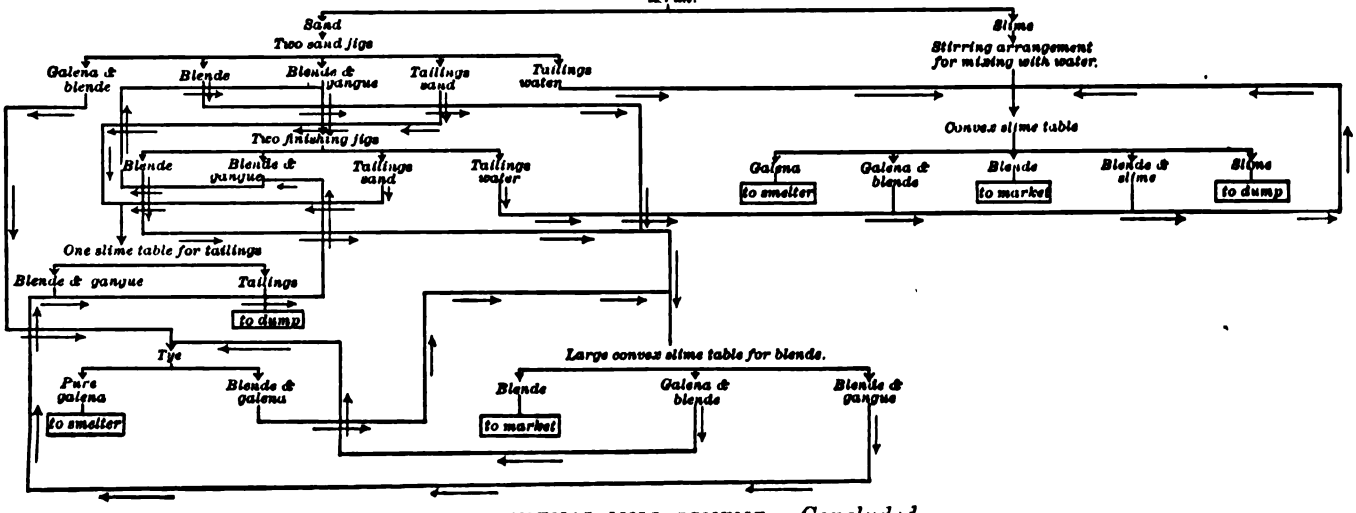

CLAUSTHAL MILL SCHEME.—*Concluded.*

The labor required is 450 men per 24 hours on an average.

Power is furnished to the mill as follows: A 50-horse power Corliss engine with one cylinder runs the breaker house. A 100-horse power Corliss engine with two cylinders runs the coarse and medium and fine rolls houses. A 150-horse power Corliss engine with two cylinders and a 30-horse power Girard water turbine run the gravity stamp house. A 7-horse power Partial water turbine and a 45-horse power Knop turbine drive the trommel and jig houses. A 15-horse power Girard turbine runs the auxiliary washing house. A water wheel 4.14 m. diameter runs the old stamp mill X. Two water wheels 3.4 m. and 4.04 m. diameter run the old stamp mill XI. Two water wheels 3.7 m. and 3.8 m. diameter run the old stamp mill XII.

For twelve months in 1880 and 1881 the ore treated was 83,170.5 tons, and this yielded 8,048.5 tons of lead concentrates, 364.4 tons of zinc concentrates and 117.65 tons of copper concentrates; 100 tons of ore produced 9.68 tons of lead concentrates, 0.44 ton of zinc concentrates and 0.14 ton of copper concentrates. For twelve months in 1893 and 1894 the ore treated was 80,294.25 tons, and this yielded 5,401.41 tons of lead concentrates, 6,644.585 tons of zinc concentrates and 39.6 tons of copper concentrates. The corresponding figures for 100 tons of ore were 6.73 tons of lead concentrates, 8.28 tons of zinc concentrates and 0.05 ton of copper concentrates. The lead concentrates contain from 0.062 to 0.072% silver. The tailings contain 0.2 to 0.4% lead and 0.5 to 2.0% zinc.

As will be seen from the scheme, pyritic material is sent for treatment to the Dorotheer mill. The author is unable to find any description of this plant, which is a small affair. Moreover, at last accounts it was the intention to arrange to treat the pyritic stuff at the main mill.

(*h*) COMPLEX JIGGING MILLS DRESSING ARGENTIFEROUS COPPER SULPHIDES IN MONTANA.

§ 699. This group includes Mills 38, 39, 40 and 41. They use as final crushers either rolls or steam stamps. Those using rolls crush by breakers and rolls, and dress by screens, classifiers, jigs and tables or vanners. Mill 38 re-treats coarse middlings by auxiliary rolls, and sends them back into the system; medium middlings are treated by auxiliary rolls, classifiers, jigs and vanners. The middlings of these together with the original fine middlings are again treated by auxiliary Huntington mills, jigs, and slime tables. One of the three sections had a steam stamp, but it was used only when one of the others stopped for repairs. In Mill 39 the coarser middlings are recrushed by breakers and rolls, going back into the system; the finer middlings are treated by Huntington mills, classifiers, jigs and vanners. Mills 40 and 41 re-treat the coarse middlings by auxiliary rolls, and send them back into the system; fine middlings are re-treated by auxiliary rolls and jigs, the final overflow of the classifiers going back into the system. That the mill men of this district are appreciating the advantages of running two machines together is shown by the changes in Mill 39, indicated in the note at the end of the mill.

The ore treated by these mills carries a very high percentage of concentrates which tends to make high losses in the tailings. It is for this reason that such coarse jigging is practiced in Mills 38 and 39. The coarse concentrates are not of high grade, being only good average products, but it pays better to save the material in this way than to crush it finer. However, no tailings go to waste which are coarser than 3 mm., and even then they carry a considerable percentage of the values in the ore. The losses are more in the jig tailings than in the vanner tailings. In Mill 40 during the month of July, 1892, the jig

tailings below 3 mm. assayed 2.86 ounces silver per ton and 1.64% copper, while the vanner tailings assayed 1.6 ounces silver and 1.00% copper. This loss in the jig tailings is due to included grains, and also to fine material that comes to the jigs through the imperfections of hydraulic classifiers (see Tables 300 and 301). Good material can be saved from this by recrushing and treatment on vanners and Wilfley tables, and it is only a question of experiment in the individual mills to determine whether it will pay. Mill 38 has decided the question in the affirmative.

§ 700. MILL No. 38. BOSTON AND MONTANA CONSOLIDATED COPPER AND SILVER MINING COMPANY, GREAT FALLS, MONTANA.—The mill has three sections: two roll sections, and one steam stamp section. Only two sections can be run at a time. Capacity of each roll section 300 tons in 24 hours, and of the steam stamp section 250 tons in 24 hours. The mill runs 24 hours per day, 7 days per week. The ore consists of the economic minerals chalcopyrite, pyrite, enargite and bornite and a gangue of quartz and decomposed feldspar. The problem is to save the copper and silver. The ore is brought by the Great Northern Railroad a distance of 170 miles in bottom dumping cars holding 25 to 30 tons, to (1).

1. One No. 1 or receiving bin with flat bottom, holding 3,000 tons, in 3 sections. By gates and chutes to (2) and (50). Both roll sections are alike and the author will therefore describe *one* roll section and the steam stamp section.

One Roll Section.

2. Two No. 1 grizzlies with 1-inch spaces. Oversize to (3); undersize to (4).

3. One No. 1 Blake breaker, 10 × 20 inches, crushing to 1½ inches. To (4).

4. From (2) and (3). Two No. 1 trommels with 38.1-mm. round holes. Oversize to (5); undersize to (6).

5. Two No. 2 Blake breakers, 7 × 10 inches, crushing to 1 inch. To (6).

6. From (4), (5), (23), (24). Two No. 1 bucket elevators. To (7).

7. Two No. 2 trommels with 22.2-mm. round holes. Oversize to (14); undersize to (8).

8. Two No. 3 trommels with 9.5-mm. round holes. Oversize to (15); undersize to (9).

9. From (8) and (53). Two No. 4 trommels with 5-mm. round holes. Oversize to (17); undersize to (10).

10. Two No. 5 trommels with 2½-mm. round holes. Oversize to (18); undersize to (11).

11. No. 1 unwatering box. Spigot to (12); overflow to (13).

12. Two No. 1 hydraulic classifiers, each with 4 spigots. 1st spigot to (19); 2d to (20); 3d to (21); 4th to (22); overflow to (13).

13. From (11), (12), (22), (29), (33). No. 1 whole current box classifier. Two sets of tanks with 4 tanks in series in each set, and 4 spigots in each tank. Spigots to twelve upper decks and eight lower decks of (40); overflow to (49).

14. From (7). Two No. 1 jigs. 1-sieve Harz jigs. Discharge to (16); hutch to (15); tailings to (23).

15. From (8) and (14). Two No. 2 jigs. 2-sieve Harz jigs. Discharges to (16); hutches to (17) or (44); tailings to (24).

16. From (14) and (15). No. 1 unwatering screen. Oversize to (48); undersize (water only) to be used on (15), (17), (18), (19), (20), (21), (22).

17. From (9) and (15). Eight No. 3 jigs. 2-sieve Evans jigs. Discharges and hutches to (44); tailings to (25).

18. From (10). Eight No. 4 jigs. 2-sieve Evans jigs. Products like (17).

19. From (12). Two No. 5 jigs. 2-sieve Evans jigs. 2d discharge to (34); 1st and 2d hutches to (43); tailings to (49).

20. From (12). Two No. 6 jigs. 2-sieve Evans jigs. Products like (19).
21. From (12). Two No. 7 jigs. 2-sieve Evans jigs. Products like (19).
22. From (12). Two No. 8 jigs. 2-sieve Evans jigs. 2d discharge to (34); 1st hutch to (43); 2d to (13); tailings to (49).
23. From (14). One pair of No. 1 rolls, 26 × 15 inches, set ½ inch apart. To (6).
24. From (15). One pair of No. 2 rolls, 26 × 15 inches, set ¼ inch apart. To (6).
25. From (17) and (18). No. 2 unwatering box. Spigots to (26); overflow, (water only) to be used on (40) and (42).
26. From (25) and (28). One No. 2 bucket elevator. To (27).
27. One No. 6 trommel with 2.5-mm. round holes. Oversize to (28); undersize to (29).
28. One pair of No. 3 rolls, 26 × 15 inches, set close together. To (26).
29. From (27). Two No. 2 hydraulic classifiers with 4 spigots each. 1st spigot to (30); 2d to (31); 3d to (32); 4th to (33); overflow to (13).
30. Two No. 9 jigs. 2-sieve Evans jigs. Products like (19).
31. From (29). Two No. 10 jigs. 2-sieve Evans jigs. Products like (19).
32. From (29). Two No. 11 jigs. 2-sieve Evans jigs. Products like (19).
33. From (29). Two No. 12 jigs. 2-sieve Evans jigs. Products like (22).
34. From (19), (20), (21), (22), (30), (31), (32), (33), (38), (39), (58), (59), (60). No. 5 bucket elevator. To (35).

From here on the three sections of the mill are described together.

All Three Sections United.

35. Four 5-foot Huntington mills, using a screen with 1.5-mm. slots. By distributor to (36).
36. Three No. 3 hydraulic classifiers with four spigots each. Spigots to (38) and (39); overflow to (37).
37. From (36), (55) and (56). One No. 2 whole current box classifier. Spigots to four lower decks of (40); overflow to (49).
38. From (36). Six No. 13 jigs. 3-sieve Harz jigs. 3d discharge to (43); 1st and 2d hutches to (43); 3d to (34); tailings to (49).
39. From (36). Six No. 14 jigs. 3-sieve Harz jigs. Products like (38).
40. Pulp from (13) and (37); wash water from (25). Twelve 2-deck convex revolving slime tables. Heads of both decks to (43); middlings and tailings to (41).
41. One No. 3 whole current box classifier. Spigots to (42); overflow to (49).
42. Pulp from (41); wash water from (25). Twenty 4-foot Frue vanners. Heads to (43); tailings to (49).
43. From (19), (20), (21), (22), (30), (31), (32), (33), (38), (39), (40), (42). Three No. 3 bucket elevators. To (44).
44. From (15), (17), (18), (43), (58), (59), (60). No. 1 settling tanks. Three sets with four tanks in series in each set. Settlings by gate periodically to (46); overflow and drainings to (45).
45. No. 2 settling tanks. Six sets with four tanks in series in each set. Settlings shoveled periodically to (46); overflow to (47).
46. From (44) and (45). Bins for concentrates. Three sets with four in each set. Each bin is 10 feet long, 12 feet wide with bottom sloping 45°. By car to smelter.
47. From (44) and (45). No. 3 settling tank. Settlings by car to smelter; overflow to (49).

48. From (16), (57). No. 4 bucket elevator. By cars to smelter.
49. From (13), (19), (20), (21), (22), (30), (31), (32), (33), (37), (38), (39), (41), (42), (47), (59), (60). Tailings launder to waste.

Steam Stamp Section.

50. From (1). Grizzly. Oversize to (51); undersize to (52).
51. From (50), (53), (57). Steam stamp using a screen with 12.7 and 19.1-mm. round holes. To (52).
52. From (50) and (51). No. 6 bucket elevator. To (53).
53. Two No. 7 trommels. Each sectional with 9.5 and 22.2-mm. round holes. Over 22.2 mm. to (51); through 22.2 on 9.5 mm. to (57); through 9.5 mm. to (54) or (9).
54. Three No. 8 trommels with 5-mm. round holes. Oversize to (58); undersize to (55).
55. One No. 3 unwatering box. Spigots to (56); overflow to (37).
56. Three No. 4 hydraulic classifiers with four spigots each. Spigots to (59) and (60); overflow to (37).
57. From (53). One No. 15 jig. 2-sieve Harz jig. Discharges by unwatering screen to (48); hutches to (58); tailings to (51).
58. From (54) and (57). Six No. 16 jigs. 2-sieve Harz jigs. Discharges and hutches to (44); tailings to (34).
59. From (56). Six No. 17 jigs. 3-sieve Harz jigs. Discharges to (44); 1st and 2d hutches to (44); 3d hutch to (34); tailings to (49).
60. From (56). Six No. 18 jigs. 3-sieve Harz jigs. Products like (59).

Power is derived from falls in the Missouri River at this point and is transmitted to the mill by wire rope transmission.

Water is pumped to the mill from the river by a Roots rotary pump.

In this mill note that the hutches of No. 1 and No. 2 jigs are finished on the next jig; also that all coarse tailings are recrushed.

In this mill the steam stamp section described above has now been abandoned owing to the difficulty of handling the large amount of fine slimes formed by the stamp, and it has been changed over to be like the two other sections. This change made an addition necessary to accommodate the middlings plant, (35)—(39), which formerly occupied space in the steam stamp section. All three sections of the mill can now be run at the same time and the number of Huntington mills (35) has been increased to seven and the other machines, (36)—(39), increased to correspond. Furthermore a second mill has been built with three sections and a middlings plant—a duplicate of the first mill, except that Evans jigs are used in (38) and (39),—and the capacity of each mill is now 1,200 tons or more in 24 hours. The increased capacity is due entirely to better arrangement.

§ 701. MILL NO. 39. BUTTE AND BOSTON MINING COMPANY, BUTTE, MONTANA.—Capacity 500 tons in 24 hours. The mill runs 24 hours per day, 7 days per week. The ore consists of the economic minerals bornite, chalcopyrite, enargite, pyrite, blende with some silver minerals and a gangue of quartz and some decomposed feldspar. The problem is to save the copper and silver without the zinc. The ore is hand picked in the mine into three classes: (*a*) rich ore which goes to smelter; (*b*) concentrating ore by hopper bottom cars holding 5 tons ¼ mile to (1); (*c*) waste left in the mine.

1. Two receiving bins with flat bottoms, holding 246 tons each. By chute to (2).
2. Two No. 1 Blake breakers, 9 × 15 inches, crushing to 2½ inches. To (3).
3. Two No. 1 trommels. Each sectional with 38.1 and 54-mm. round holes.

Over 51 mm. to (4); through 51 on 38.1 mm. to (15); through 38.1 mm. to (5).

4. From (3) and (15). Two No. 2 Blake breakers, 4 × 10 inches, crushing to 1 inch. To (5).

5. From (3), (4) and (7). Two No. 2 trommels. Each sectional with 38.1 and 15-mm. round holes. Over 38.1 mm. to (6); through 38.1 on 15 mm. to (16); through 15 mm. to (8).

6. From (5) and (16). Two pairs of No. 1 rolls, 30 × 16 inches, set $\frac{3}{16}$ inch apart. To (7).

7. From (6), (15), (16), (17), (18). Two No. 1 bucket elevators. To (5).

8. From (5). Two No. 2 bucket elevators. To (9).

9. Four No. 3 trommels with 8.5-mm. round holes. Oversize to (17); undersize to (10).

10. Four No. 4 trommels with 4.5-mm. round holes. Oversize to (19); undersize to (11).

11. Two distributing boxes, each 3 feet long, 2 feet wide, 2½ feet deep. Two spigots to (12).

12. Four No. 1 hydraulic classifiers with two spigots each. 1st spigot to (20); 2d to (21); overflow to (13).

13. Four No. 2 hydraulic classifiers with two spigots each. 1st spigot to (22); 2d to (23); overflow to (14).

14. Four No. 1 whole current box classifiers each with three spigots. Spigots to sixteen vanners of (31); overflow to (34).

15. From (3). Two No. 1 jigs. 1-sieve Harz jigs. Discharge to (33); hutch to (7); tailings to (4).

16. From (5). Two No. 2 jigs. 1-sieve Harz jigs. Discharge to (33); hutch to (7); tailings to (6).

17. From (9). Four No. 3 jigs. 1-sieve Harz jigs. Discharge to (32); hutch to (7); tailings to (18).

18. One pair of No. 2 rolls, 26 × 15 inches, set close together. To (7).

19. From (10). Four No. 4 jigs. 3-sieve Harz jigs. Discharges and hutches to (32); tailings to (24).

20. From (12). Four No. 5 jigs. 3-sieve Harz jigs. Products like (19).

21. From (12). Four No. 6 jigs. 3-sieve Harz jigs. Products like (19).

22. From (13). Four No. 7 jigs. 4-sieve Harz jigs. Hutches to (32); tailings to (24).

23. From (13). Four No. 8 jigs. 4-sieve Harz jigs. Products like (22).

24. From (19), (20), (21), (22), (23), (30). Four 5-foot Huntington mills using screen with 2½ × 12½-mm. slots. To (25).

25. Two No. 3 hydraulic classifiers with two spigots each. Spigots to (28); overflow to (26).

26. Two No. 4 hydraulic classifiers with 1 spigot each. Spigot to (29); overflow to (27).

27. Five No. 2 whole current box classifiers with two spigots each. Spigots to four vanners of (31); overflow to (34).

28. From (25). Four No. 9 jigs. 4-sieve Harz jigs. 4th discharge to (30); 1st, 2d and 3d hutches to (32); 4th to (30); tailings to (34).

29. From (26). Two No. 10 jigs. 4-sieve Harz jigs. Products like (28).

30. From (28) and (29). One No. 3 bucket elevator. To (24).

31. From (14) and (27). Twenty 4-foot Frue vanners. Heads to (32); tailings to (34).

32. From (17), (19), (20), (21), (22), (23), (28), (29), (31). Two No. 4 bucket elevators. To (33).

33. From (15), (16) and (32). Nine No. 1 settling tanks for concentrates,

each about 12 × 13 × 15 feet deep. Settlings after draining are discharged by gates to cars to go to smelter; overflow pumped back to water supply tank.

34. From (14), (27), (28), (29), (31). Tailings launder to waste pile.

The power is derived from four fire tube boilers 14 feet long and 54 inches diameter, running under a pressure of 100 pounds per square inch, and a cross compound engine with high pressure cylinder 14 × 42 inches and low pressure 24 × 42 inches, making 86 revolutions per minute, cutting off at ¼ stroke and developing 250 indicated horse power.

Water is derived from three sources:—1,440,000 gallons per 24 hours are pumped from the creek up 75 feet to a tank at the top of the mill by a compound Blake pump; 700,000 gallons are repumped from the settling tanks (33) to the store tanks; 1,000,000 gallons flow into the mill.

One hundred tons of ore yield about 40 tons of concentrates and 60 tons of tailings.

In this mill note the rather unusual duplication of trommel holes in (3) and (5) in order to be able to treat original stuff together with middlings.

By recent changes the vanners (31) have been replaced by convex revolving slime tables followed by Wilfley tables. The slime tables make heads to the smelter and tailings to the Wilfley tables. The latter make heads to the smelter and tailings to waste.

§ 702. Mill No. 40. Colorado Smelting and Mining Company, Butte, Montana.—(See Figs. 519*a* and 519*b*.)—Capacity of the mill is 275 to 300 tons per 24 hours for the section treating ore from the company's mine and 125 to 150 tons for the section treating custom ores. The ore consists of the economic minerals pyrite, blende, bornite, enargite, chalcopyrite, chalcocite, tetrahedrite and tennantite, mostly in coarse crystallization but sometimes finely disseminated, and a gangue of quartz, with some decomposed granite and a little barite. The problem is to save the copper and silver without the zinc. In the mine low grade blende containing only 10 or 20 ounces silver per ton is left awaiting a market. The rest of the material is classed into ore which is of high grade suitable to hand pick and that which is not. Both classes are hoisted and trammed in end dumping cars holding 1,800 pounds to the rock house, the former going to (1) and the latter to (3).

Rock House.

1. Two No. 1 grizzlies with 1½-inch spaces. Oversize to (2); undersize to (3).

2. Two picking floors. Clean smelting ore (copper, zinc and silver) by teams to smelter; pure zinc ore (zinc and silver) for a separate smelting treatment; waste to dump; residue or concentrating ore to (3).

3. From the mine, (1) and (2). Two No. 1 or rock-house bins each 60 feet long, 13 feet wide, with bottoms sloping 52°, and holding 650 tons each. By gate and chute to 4-horse wagons, holding 5½ tons, 2 miles to (4).

Mill.

4. Four No. 2 or receiving bins, two of them holding 150 tons each for the company's ore and two holding 200 tons each for custom ore. By gate and chute to (5).

From this point on only the company's section of the mill will be described. The other section is an exact duplicate of it.

5. One No. 1 Blake breaker, 9 × 15 inches, crushing to 2 inches. To (6).

6. From (5), (9) and (16). Two No. 1 bucket elevators. To (7).

7. Two No. 1 trommels with 20-mm. round holes. Oversize to (8); undersize to (10).

8. Two No. 2 Blake breakers, 7 × 10 inches, crushing to 1 inch. To (9).

9. Two pairs of No. 1 rolls,* 30 × 16 inches, set ⅛ inch apart. To (6).

10. From (7). Two No. 2 trommels with 7-mm. round holes. Oversize to (15); undersize to (11).

11. Two No. 3 trommels with 4.5-mm. round holes. Oversize to (17); undersize to (12).

12. Two No. 4 trommels with 3-mm. round holes. Oversize to (18); undersize to (13).

13. Two No. 1 hydraulic classifiers, each with four spigots. Spigots to (19); overflow to (14).

14. From (13) and (25). Two No. 1 whole current box classifiers in series with 8 spigots in each. Spigots to (28); overflow none.

15. From (10). Two No. 1 jigs. 1-sieve Harz jigs. Discharge to (29); hutch to (20); tailings to (16).

16. One pair of No. 2 rolls, 30 × 16 inches, set $\frac{1}{16}$ inch apart. To (6).

17. From (11). Three No. 2 jigs. 3-sieve Harz jigs. Discharges and hutches to (31); tailings to (20).

18. From (12). Three No. 3 jigs. 3-sieve Harz jigs. Products like (17).

19. From (13). Six No. 4 jigs. 3-sieve Harz jigs. 1st and 2d discharges to (31); 3d to (20); hutches to (31); tailings to (35).

20. From (15), (17), (18), (19), (26), (27). One unwatering trommel with 2½-mm. round holes. Oversize to (21); undersize to (22).

21. From (20) and (24). One pair of No. 3 rolls,† 30 × 16 inches, set close together. To (23).

22. From (20). One No. 1 unwatering box. Spigot to (23); overflow is clear water to be used again in the mill.

23. From (21) and (22). One No. 2 bucket elevator. To (24).

24. One No. 5 trommel with 3-mm. round holes. Oversize to (21); undersize to (25).

25. One No. 2 hydraulic classifier with 2 spigots. 1st spigot to (26); 2d to (27); overflow to (14).

26. Two No. 5 jigs. 3-sieve Harz jigs. 1st and 2d discharges to (30); 3d to (20); 1st and 2d hutches to (30); 3d to (20); tailings to (35).

27. From (25). Two No. 6 jigs. 3-sieve Harz jigs. Products like (26).

28. From (14). Sixteen 4-foot Frue vanners. Heads to (30); tailings to (36).

29. From (15). One pair of No. 4 rolls,‡ 27 × 14 inches. To (32).

30. From (26), (27) and (28). One No. 3 bucket elevator. To (31).

31. From (17), (18), (19), (30), (33). One No. 4 bucket elevator. To (32).

32. From (29) and (31). Fourteen No. 1 settling tanks for concentrates, holding 100 tons each, used in rotation. It takes 24 hours to fill a tank, 48 hours to settle and drain it and 24 hours to discharge it. Settlings containing 4% moisture, by cars, holding 1½ tons, to smelter; overflow and drainings to (33).

33. No. 2 settling tanks. 3 tanks in series. Spigots to (31); overflow to (34).

34. One No. 5 bucket elevator lifting water to a tank which supplies the jigs and vanners.

35. From (19), (26), (27). One No. 6 bucket elevator. To (36).

36. From (28) and (35). Tailings launder, 1,100 feet long, to waste.

---

* These are called No. 1 rolls and No. 3 rolls throughout the rest of the book.
† These are called No. 4 rolls elsewhere throughout the book.
‡ See (31) for the rolls which are called No. 4 rolls elsewhere in the book.

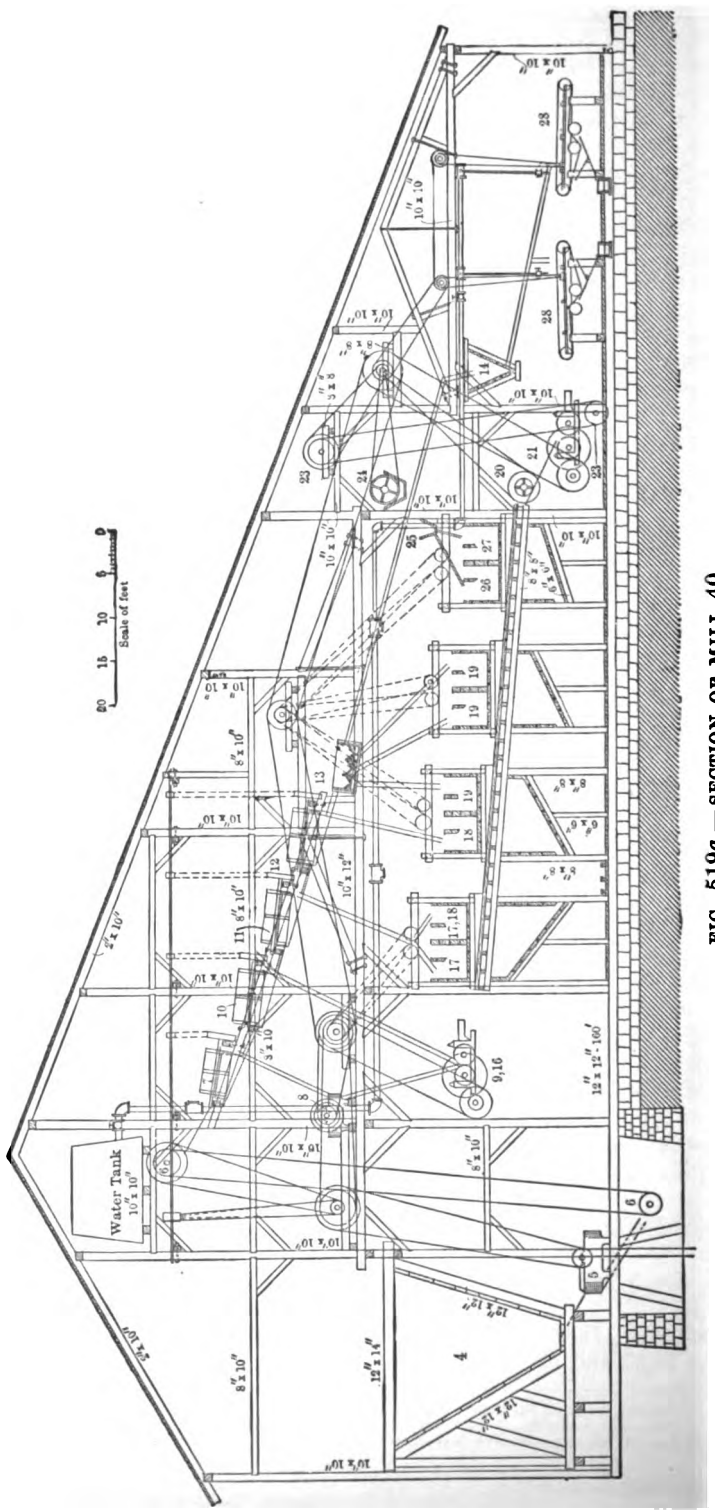

FIG. 519a.—SECTION OF MILL 40.

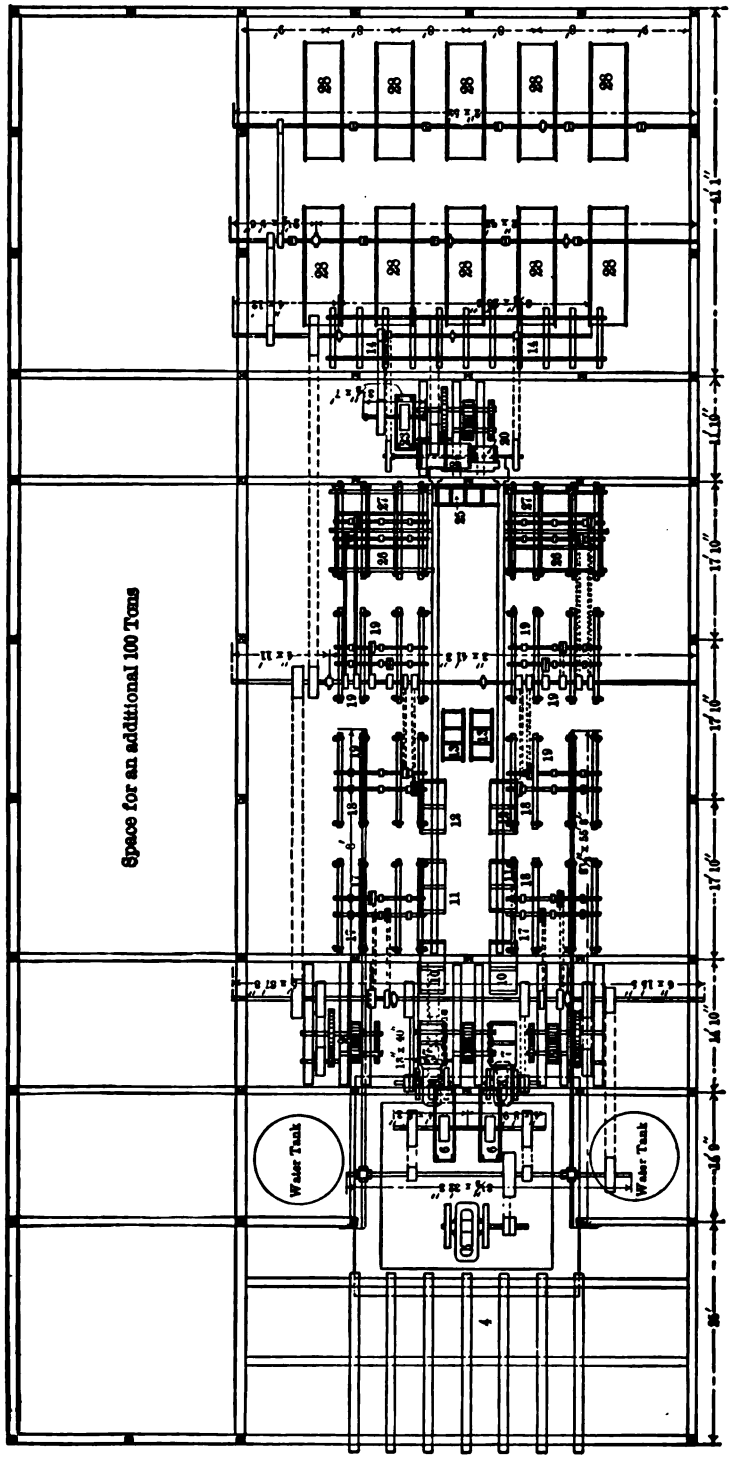

FIG. 5196.—PLAN OF MILL 40.

The mill employs 23 men per 24 hours, divided into two shifts of 12 hours each: 2 engineers, 2 firemen, 2 foremen, 2 breaker men, 4 jig men, 2 vanner men, 2 pump men, 3 trammers, 2 oilers, 1 weigher and 1 roustabout. Wages vary from $3 to $4.50 per shift. Board costs $25 per month without lodging or $30 with lodging. Wood costs $4 per cord and coal $3.50 per ton.

Power is furnished by 3 fire-tube boilers, 16 feet long, 54 inches diameter, with tubes 3½ inches diameter, running under a pressure of 100 pounds per square inch and burning 6.6 tons of coal per 24 hours; and a tandem compound condensing Corliss engine with high pressure cylinder 14 × 42 inches and low pressure 24 × 42 inches, making 81 revolutions per minute and rated at 200 horse power with steam pressure at 95 pounds and a vacuum of 21¾ inches of mercury. The high pressure cylinder cuts off at ⅛ stroke. The mill and dynamo require 171 to 177 horse power.

The water is obtained principally from Black Tail Creek, being pumped 2,800 feet and to a height of 90 feet through a 10-inch pipe by a No. 5 Roots rotary pump driven by a 60-horse power electric motor making 600 revolutions per minute and using 50 amperes with 350 volts. The current is transmitted 2,800 feet through No. 2 copper wire from a direct current dynamo driven by the mill engine, making 600 revolutions per minute and delivering 50 amperes at 550 volts. When necessary, water is taken from Silver Bow Creek, but this is objectionable as it has been already used by several mills above. The amount of water pumped to the mill is 864,000 gallons per 24 hours and in addition 200,000 gallons are re-elevated by No. 5 elevator (34). The mill water is received in a tank at the top of the mill and part of it flows from this tank through the condenser for the engine and back to another tank which supplies the jigs and vanners.

Assays are as follows:

	Copper. %	Silver. Ounces per Ton.	Zinc. %	Gangu . %
Picked smelting ore	18 to 22	25 to 30	5 to 7	30 to 35
Concentrating ore	4.5 to 5.5	8 to 10	6 to 8	60 to 65
Concentrates	10 to 12	18 to 24	8 to 12	15 to 17
Tailings	1.5 to 1.8	2.5 to 3	.....	.....

One hundred tons of ore from the mine yield about 3 tons of hand picked copper smelting ore, less than ½ ton of hand picked zinc ore and about 96 tons of concentrating ore which yields 32 tons of concentrates and 64 tons of tailings. The mill saves 80 to 85% of both the copper and silver.

§ 703. Mill No. 41. Parrot Silver and Copper Mining Company, Butte, Montana.—Capacity 300 to 350 tons per 24 hours, usually, although it can run up to 400 tons. The mill runs 24 hours per day, 7 days per week. The ore consists of the economic minerals chalcocite, bornite, chalcopyrite, enargite, and blende, mostly in coarse crystallization, but sometimes finely disseminated, and a gangue of quartz and decomposed feldspar. The problem is to save the copper and silver without the zinc. The ore is sorted in the mine into rich ore which goes to the smelter and concentrating ore which is brought by gravity in side dumping cars holding 8 tons each, to (1).

1. One No. 1 or receiving bin with bottom sloping three ways, holding 400 tons. To (2).

2. One No. 1 Blake breaker, 9 × 15 inches, crushing to 2 inches. To (3).

3. From (2) and (7). One No. 1 trommel with 15.9-mm. round holes. Oversize to (4); undersize to (8).

4. One No. 2 Blake breaker, 7 × 10 inches, crushing to 1 inch. To (5).

5. One pair of No. 1 rolls, 30 × 15 inches. To (6).

6. One pair of No. 2 rolls, 30 × 15 inches, set close together. To (7).

7. From (6) and (25). One No. 1 bucket elevator. To (3).

8. From (3). Two No. 2 trommels with 9.5-mm. round holes. Oversize to (17); undersize to (9).

9. Two No. 3 trommels with 6.35-mm. round holes. Oversize to (18); undersize to (10).

10. Two No. 4 trommels with 3.2-mm. round holes. Oversize to (19); undersize to (11).

11. Two No. 1 unwatering boxes, each with one spigot. Spigots to (12); overflow probably to (14) or (15).

12. No. 1 hydraulic classifier with six spigots. 1st spigot to (20); 2d to (21): 3d to (22); 4th to (23); 5th to (24); 6th not used; overflow to (13).

13. One No. 2 hydraulic classifier with six spigots. Spigots to (38); overflow to (14).

14. From (13) and (33). No. 1 whole current box classifier with eight sets of spigots with six spigots in each set. 1st, 2d and 3d sets of spigots to (38); rest not used; overflow to (15).

15. One No. 2 whole current box classifier with four spigots. Spigots to (38); overflow to (16).

16. From (15) and (39). Three No. 1 settling tanks. Settlings to smelter; overflow to (40).

17. From (8). Two No. 1 jigs. 2-sieve Harz jigs. Discharges to (39); hutches and tailings by No. 2 bucket elevator to (25).

18. From (9). Two No. 2 jigs. 3-sieve Harz jigs. Discharges to (39); 1st and 2d hutches to (39); 3d hutch to (26); tailings to (26).

19. From (10). Two No. 3 jigs. 3-sieve Harz jigs. Products like (18).

20. From (12). Two No. 4 jigs. 3-sieve Harz jigs. 1st and 2d discharges to (39); 3d to (29); 1st and 2d hutches to (39); 3d to (29); tailings to (40).

21. From (12). Two No. 5 jigs. 4-sieve Harz jigs. 4th discharge to (29); 1st, 2d and 3d hutches to (39); 4th to (29); tailings to (40).

22. From (12). Two No. 6 jigs. 4-sieve Harz jigs. 1st, 2d and 3d hutches to (39); 4th to (29); tailings to (40).

23. From (12). Two No. 7 jigs. 4-sieve Harz jigs. Products like (22).

24. From (12). Two No. 8 jigs. 4-sieve Harz jigs. Products like (22).

25. From (17). One pair of No. 3 rolls, 30 × 15 inches, set close together. To (7).

26. From (18), (19) and (28). One No. 3 bucket elevator. To (27).

27. One pair of No. 4 rolls, 30 × 15 inches, set close together. To (28).

28. From (27) and (30). One No. 5 trommel with 3.2-mm. round holes. Oversize to (26); undersize by No. 4 bucket elevator to (31).

29. From (20), (21), (22), (23), (24), (34), (35), (36) and (37). One No. 5 bucket elevator. To (30).

30. One pair of No. 5 rolls, 30 × 15 inches, set close together. To (28).

31. From (28). One No. 3 hydraulic classifier with four spigots. 1st and 2d spigots to (34); 3d and 4th to (35); overflow to (32).

32. One No. 4 hydraulic classifier with four spigots. 1st and 2d spigots to (36); 3d and 4th to (37); overflow to (33).

33. One No. 5 hydraulic classifier with two spigots. Spigots to (38); overflow to (14).

34. From (31). Two No. 9 jigs. 3-sieve Harz jigs. 1st and 2d discharges to (39); 3d to (29); 1st and 2d hutches to (39); 3d to (29); tailings to (40).

35. From (31). Two No. 10 jigs. 3-sieve Harz jigs. 3d discharge to (29); 1st and 2d hutches to (39); 3d to (29); tailings to (40).

36. From (32). Two No. 11 jigs. 3-sieve Harz jigs. 1st and 2d hutches to (39); 3d to (29); tailings to (40).

37. From (32). Two No. 12 jigs. 3-sieve Harz jigs. Products like (36).

38. From (13), (14), (15) and (33). Four 4-foot Frue vanners, three 5-foot Tulloch vanners, two 4-foot Tulloch vanners, four 4-foot Embrey vanners and two Improved Embrey vanners. Heads to (39); tailings to (40).

39. From (17), (18), (19), (20), (21), (22), (23), (24), (34), (35), (36), (37) and (38). No. 2 settling tank for concentrates. Settlings to smelter; overflow to (16).

40. From (16), (20), (21), (22), (23), (24), (34), (35), (36), (37) and (38). Tailings launder to waste.

Power is furnished by a steam engine developing 150 to 160 indicated horse power. This engine also runs the blower and breaker for the smelter.

The water used is 4,000 gallons per ton of ore, or 1,200,000 to 1,600,000 gallons per 24 hours.

(i) THE STEAM STAMP MILLS CONCENTRATING COPPER SULPHIDES IN MONTANA.

§ 704. This group includes Mills 42 and 43. They use (1895) steam stamps, classifiers, roughing Collom jigs, finishing Collom jigs and slime tables, or slime tables and vanners. The middlings are treated by auxiliary steam stamps or rolls, classifiers, roughing jigs, finishing jigs and tables. The steam stamps are found to slime the copper sulphides much more than rolls.* On this account in Mill 42 several steps are taken to counteract these effects: (1) All the fines that are small enough for the Collom jigs are taken out by screens before the ore is fed to the stamps. (2) The stamp uses a screen with large holes, and on soft ore the pulp then goes to a revolving screen with holes small enough to send undersize to Collom jigs; the oversize is sent to Harz jigs and the tailings of these jigs are treated as middlings. (3) All the overflows of classifiers are saved and settled in tanks yielding smelting material.

§ 705. MILL NO. 42. ANACONDA COPPER MINING COMPANY, CARROLL (NEAR ANACONDA) MONTANA.—Capacity 2,500 to 2,700 tons (later over 3,000 tons) per 24 hours, with six stamps running. The mill runs 24 hours per day, 7 days per week. The ore consists of the economic minerals chalcocite, chalcopyrite, pyrite, enargite and blende, mostly in coarse crystallization, but sometimes finely disseminated, and a gangue of quartz and decomposed feldspar. The problem is to save the copper and silver without the zinc. The ore is hand picked in the mine into rich ore, which goes to smelter, and hard concentrating ore and soft concentrating ore, which go separately in railroad cars 27 miles to (1) and (5). The earlier part of the mill is divided into two sections, one for hard ore and one for soft ore. Later both sections come together.

Hard Ore Section.

1. Four No. 1 or receiving bins for hard ore, with sloping bottoms, holding about 3,000 tons each. By gate and chute to (2).

2. Four No. 1 vibrating grizzlies with 1-inch spaces. Oversize is separated by hand picking into rich ore to smelter and residue to (4); undersize to (3).

3. Four No. 1 trommels with 6.35-mm. round holes. Oversize by four No. 1 bucket elevators to (4); undersize to (13).

4. From (2) and (3). Four Fraser & Chalmers and Union Iron Works steam stamps on hard ore, using screens with 4.76 × 9.52-mm. slots. To (13).

* At the date of publication of this book (1903) the use of steam stamps for these ores has been entirely given up.

Soft Ore Section.

5. From the mine. Four No. 2, or receiving bins for soft ore, with sloping bottoms, holding about 3,000 tons each. By gate and chute to (6).

6. Four No. 2 vibrating grizzlies with 1-inch spaces. Oversize is separated by hand picking into rich ore to smelter and residue to (9); undersize to (7).

7. Four No. 2 trommels with 12.7-mm. round holes. Oversize by No. 2 bucket elevators to (9); undersize to (8).

8. Four No. 3 trommels with 6.35-mm. round holes. Oversize to (11); undersize to (13).

9. From (6) and (7). Four Fraser & Chalmers and Union Iron Works steam stamps on soft ore, using screens with 12.7-mm. round holes. To (10).

10. Four No. 4 trommels with 6.35-mm. round holes. Oversize to (11); undersize to (13).

11. From (8) and (10). Sixteen No. 1 jigs. 1-sieve Harz jigs. Discharge and hutch to (42); tailings to (12).

12. One Ball steam stamp on middlings, using screens with 4.76 × 9.52-mm. slots. To (13).

Hard and Soft Ore Sections Together.

13. From (3), (4), (8), (10), (12). Forty-four No. 1 hydraulic classifiers, each with three spigots. Twelve treat stuff from (3) and (8), and thirty-two from (4), (10), (12). 1st spigots to (14); 2d to (15); 3d to (16); 4th to (17); overflow to (38).

14. Forty-four No. 2 jigs. 2-sieve Collom jigs. Discharges and hutches to (42); tailings to (18).

15. From (13). Forty-four No. 3 jigs. 2-sieve Collom jigs. 2d discharge to (42); hutches to (42); tailings to (18).

16. From (13). Forty-four No. 4 jigs. 2-sieve Collom jigs. 1st hutch to (42); 2d to (21); tailings to (46).

17. From (13). Forty-four No. 5 jigs. 2-sieve Collom jigs. Products like (16).

18. From (14) and (15). No. 1 unwatering boxes. Spigots to (19) and (20); overflow pumped up to water tank for steam stamps.

19. Twenty-four No. 6 jigs. 2-sieve Collom jigs. Discharges to (30); 1st hutch to (42); 2d to (24); tailings to (46).

20. From (18). Twenty-four No. 7 jigs. 2-sieve Collom jigs. 1st hutch to (42); 2d to (24); tailings to (46).

21. From (16) and (17). No. 2 hydraulic classifiers, each with two spigots. 1st spigots to (22); 2d to (23); overflow to (38).

22. Twenty-four No. 8 jigs. 2-sieve Collom jigs. 1st hutch to (42); 2d to (27); tailings to (46).

23. From (21). Twenty-four No. 9 jigs. 2-sieve Collom jigs. Products like (22).

24. From (19) and (20). No. 3 hydraulic classifiers, each with two spigots. 1st spigots to (25); 2d to (26); overflow to (38).

25. Twelve No. 10 jigs. 2-sieve Collom jigs. Products like (22).

26. From (24). Twelve No. 11 jigs. 2-sieve Collom jigs. Products like (22).

27. From (22), (23), (25), (26), (36), (37). No. 4 hydraulic classifiers, each with two spigots. 1st spigots to (28); 2d to (29); overflow to (38).

28. Twelve No. 12 jigs. 2-sieve Collom jigs. Hutches to (42); tailings to (46).

29. From (27). Twelve No. 13 jigs. 2-sieve Collom jigs. Products like (28).

30. From (19) and (31). One pair of No. 1 rolls, 22 × 16 inches, set close together. By No. 3 bucket elevator to (31).

31. One No. 5 trommel with 2.5-mm. round holes. Oversize to (30); undersize to (32).

32. Fourteen No. 5 hydraulic classifiers each with two spigots. 1st spigots to (33); 2d to (34); overflow to (38).

33. Fourteen No. 14 jigs. 2-sieve Collom jigs. 1st hutch to (42); 2d to (35); tailings to (46).

34. From (32). Fourteen No. 15 jigs. 2-sieve Collom jigs. Products like (33).

35. From (33) and (34). No. 6 hydraulic classifiers, each with two spigots. 1st spigots to (36); 2d to (37); overflow to (38).

36. Twelve No. 16 jigs. 2-sieve Collom jigs. 1st hutch to (42); 2d to (27); tailings to (46).

37. From (35). Twelve No. 17 jigs. Products like (36).

38. From (13), (21), (24), (27), (32), (35). No. 1 whole current box classifiers. Four sets with four tanks in series in each set and four spigots in each tank. Spigots to both decks of (39) and (40); overflow to (42).

39. Forty-eight No. 1 convex revolving slime tables with two decks. Heads of both decks to (42); tailings to (41).

40. From (38). Twenty No. 2 convex revolving slime tables with one deck. Heads to (42); tailings to (41).

41. From (39) and (40). Twenty-four No. 3 convex revolving slime tables with one deck. Heads to (42); tailings to (46).

42. From (11), (14), (15), (16), (17), (19), (20), (22), (23), (25), (26), (28), (29), (33), (34), (36), (37), (38), (39), (40), (41). Concentrates launder. To (43).

43. Eight No. 1 settling tanks. Settlings by gates and cars to smelter; overflow to (44).

44. Five No. 2 settling tanks. Settlings by car to smelter; overflow to (45).

45. Three No. 3 settling tanks or ponds. Settlings by car to smelter; overflow to (46).

46. From (16), (17), (19), (20), (22), (23), (25), (26), (28), (29), (33), (34), (36), (37), (41), (45). Waste launder to the river.

The mill employs about 300 men per 24 hours, divided into three 8-hour shifts. Wages vary from $1.75 per day for boys to $3 for stamp men. Power is furnished by an 800-horse power Corliss engine.

Water is brought from the river by a flume 46 × 46 inches in section, sloping 6 inches in 1,000 feet and running full.

The concentrates contain 12 to 20% copper; the coarse tailings contain 1½ to 1¾% copper; the later jig tailings contain 1¼ to 1½% copper; the table tailings contain 2% copper. One hundred tons of ore yield 50 to 75 tons of concentrates.

This mill has introduced Wilfley tables to replace some of the machines working upon fine material.

This company has recently replaced its old mill by an entirely new one. The latter is really two mills, in separate buildings with a power house between them. Each of the two mills contains four entirely independent sections, each section having a capacity of over 700 tons in 24 hours, this time including all ordinary shut downs for renewing crusher plates, etc. The following is a description of a single section:

The ore is delivered over two shaking grizzlies with 1¼-inch round holes to a 12 × 24-inch Blake breaker. The latter delivers to two trommels with 1¼-inch

round holes. Each of these sends oversize to a 5 × 15-inch Blake breaker. The products of the latter, together with the undersize of the trommels and of the grizzlies, go to a box which divides the material to two No. 1 bucket elevators. Each of the latter delivers to a line of trommels with 22-mm., 7-mm., 5-mm. and 2½-mm. round holes respectively. To treat these different sizes of ore there are two Harz jigs for the coarsest size, four Harz jigs for the next size, and twelve Evans jigs for each of the next two sizes. The undersize of the 2½-mm. trommels goes to two unwatering boxes, which deliver spigots to four No. 1 Evans classifiers and overflow to the tanks feeding the Wilfley tables. These classifiers send their spigot products to twelve Evans jigs. All of the jigs thus far mentioned have two sieves each. The tailings from the coarsest Harz jigs go to one pair of No. 1 (40 × 15-inch) rolls; those from the other Harz jigs go to No. 2 (40 × 15-inch) rolls. Both pairs of rolls deliver to the No. 1 elevators. The first two sets of Evans jigs send tailings and the third set sends the discharge from the second sieves to two large V tanks. These deliver the sand by spigots to one No. 2 elevator and clean overflow water to be used in the Huntington mills and as hydraulic water on the last finishing jigs. The practically clean water flowing over the tails of the third set of Evans jigs is used as hydraulic water in the No. 2 hydraulic classifiers.

No. 2 elevator delivers to four trommels, with 1½-mm. slotted holes, which send oversize to two pairs of No. 3 (40 × 15-inch) rolls and undersize to four No. 2 Evans classifiers. The rolls return their product to No. 2 elevator. The No. 2 classifiers feed twelve 3-sieve Evans jigs. These send tailings to two settling tanks which discharge the sand to waste and send the clear overflow to be used as wash water on Wilfley tables. Middlings from the last mentioned jigs go to one No. 3 elevator which delivers to three 6-foot Huntington mills having 1-mm. slotted screens. These mills deliver to two unwatering boxes which send spigots to four No. 3 Evans classifiers. The latter feed twelve 3-sieve Evans jigs which send tailings to waste and middlings back to No. 3 elevator to be returned to the Huntington mills.

The overflow from the hydraulic classifiers and from the unwatering boxes that feed the latter go to a number of V-shaped box classifiers. These send their products to seventeen Wilfley tables on the upper table floor and sixteen Wilfley tables on the lower table floor. The box classifiers make two grades of table feed, the coarser being treated on separate tables from the finer. All of the tables deliver their middlings either directly or by an elevator to the box classifiers that feed the lower set of tables. The overflow of the box classifiers, together with the muddy water from the Wilfley tables, goes to large settling ponds. The settlings will be briquetted and smelted. Concentrates for the smelter are made on all the jigs and Wilfley tables.

The power house contains two Nordberg triple expansion Corliss engines run condensing, each rated at 2,500 horse power but capable of developing about 3,600 horse power. There is also a Fraser & Chalmers triple expansion Corliss engine, run condensing, rated at 1,000 horse power. This is held in reserve. In addition to running the mill these engines operate quite a large amount of electrical machinery.

§ 706. MILL No. 43. BUTTE REDUCTION WORKS, BUTTE, MONTANA.—Capacity 150 tons in 24 hours. The mill runs 24 hours per day, 7 days per week. The ore is purchased from different mines and is concentrated and smelted by this company. It consists of the economic minerals chalcocite, bornite, chalcopyrite, pyrite and blende and a gangue of quartz and decomposed feldspar. The problem is to save the copper and silver without the zinc. The ore comes in wagons with removable plank bottoms and is dumped to (1).

1. Five No. 1 or receiving bins, each holding 100 tons. By gates and chutes

to cars each holding 1,500 pounds which are dumped into a skip and hoisted to (2).

2. One No. 2 or mill bin with bottom sloping three ways, holding 120 tons. By gate and chute to (3).

3. One No. 1 grizzly with 1-inch spaces. Oversize to (4); undersize to (5).

4. From (3) and (11). A Fraser & Chalmers steam stamp using screens with 11, 14 and 19-mm. round holes. To (6).

5. From (3). One No. 1 trommel with 11-mm. round holes. Oversize to (11); undersize to (6).

6. From (4), (5) and (22). Four No. 1 hydraulic classifiers, each with four spigots. 1st spigots to (12); 2d to (13); 3d to (14); 4th to (15); overflow to (7).

7. One No. 1 unwatering box with three spigots. Spigots by No. 1 bucket elevator to (8); overflow to (10).

8. One No. 1 whole current box classifier with four spigots. 1st spigot to (25); 2d to (26); 3d to (27); 4th to (28); overflow to (9).

9. One No. 2 whole current box classifier with twelve spigots. Spigots to (30); overflow to (10).

10. From (7) and (9). Three No. 1 settling tanks, only one used at a time. It takes about three months to fill a tank with mud. Settlings to smelter; overflow to (39).

11. From (5). One No. 1 jig. 1-sieve Harz jig. Discharge by belt conveyor to three small bins. 4 × 5 × 8 feet deep, with 60° bottom, to go to smelter; hutch to (18); tailings by No. 3 bucket elevator to (4).

12. From (6). Four No. 2 jigs. 2-sieve modified Collom jigs. 1st discharge to (34); 2d to (18); hutches to (34); tailings to (38).

13. From (6). Four No. 3 jigs. 2-sieve modified Collom jigs. 1st discharge to (34); 2d to (18); 1st hutch to (34); 2d to (16); tailings to (38).

14. From (6). Four No. 4 jigs. 2-sieve modified Collom jigs. 1st hutch to (34); 2d to (17); tailings to (38).

15. From (6). Four No. 5 jigs. 2-sieve modified Collom jigs. 1st hutch to (34); 2d to (17); tailings to (30).

16. From (13), (23), (24). Two No. 6 jigs. 2-sieve modified Collom jigs. 1st hutch to (31); 2d to (18); tailings to (38).

17. From (14) and (15). Two No. 7 jigs. 2-sieve modified Collom jigs. Products like (16).

18. From (11), (12), (13), (16), (17), (19) and (23). No. 1 rolls, 30 × 16 inches, set close together. By No. 2 bucket elevator to (19).

19. One No. 2 trommel with 3-mm. round holes. Oversize to (18); undersize to (20).

20. One No. 3 trommel with 2-mm. round holes. Oversize to (23); undersize to (21).

21. One No. 2 unwatering box with two spigots. Spigots to (22); overflow used as clear water on (4), (23) and (24).

22. One No. 2 hydraulic classifier. A flat bottomed box 8 × 12 × 5 inches deep with one spigot. Spigot to (24); overflow to (6).

23. From (20). One No. 8 jig. 3-sieve Harz jig. 1st and 2d discharges to (34); 3d to (18); 1st and 2d hutches to (34); 3d to (16); tailings to (38).

24. From (22). One No. 9 jig. 3-sieve Harz jig. 1st and 2d discharges to (34); 3d not used; 1st and 2d hutches to (34); 3d to (16); tailings to (38).

25. From (8). One No. 1 convex revolving slime table with two decks. A Clark step table. Heads of upper deck to (34); middlings to lower deck; tailings to (39). Heads of lower deck to (29); middlings to (30); tailings to (39).

26. From (8). One No. 2 plain convex revolving slime table with two decks. Products like (25).

27. From (8). One No. 3 convex revolving slime table with two decks. A Clark step table. Products like (25).

28. From (8). One No. 4 plain convex revolving slime table with two decks. Products like (25).

29. From (25), (26), (27), (28). One No. 2 settling tank. Settlings to smelter; overflow to (39).

30. From (9), (15), (25), (26), (27), (28). Six 4-foot Frue vanners. Three treat stuff from (9), one from (15), and two from (25), (26), (27), (28). Heads wheeled to pile to go to smelter; tailings to (39).

31. From (16), (17), and (34). One No. 4 bucket elevator. To (32).

32. One No. 3 unwatering box, with two spigots. 1st spigot to any one of (33); 2d to (35); overflow used as clear hydraulic water in (11).

33. Ten No. 3 settling tanks, holding 35 tons each. Settlings periodically to smelter; overflow to (35).

34. From (12), (13), (14), (15), (23), (24), (25), (26), (27), (28). One No. 4 settling tank. Spigot to (31); overflow to (35).

35. From (32), (33), (34). Two No. 5 settling tanks. Settlings periodically to smelter; overflow and drainings to (36).

36. One No. 6 settling tank. Settlings periodically to smelter; overflow and drainings to (37).

37. One No. 7 settling tank. Settlings every two months to smelter; overflow to (39).

38. From (12), (13), (14), (16), (17), (23), (24). Coarse tailings launder, 200 feet, to waste dump.

39. From (10), (25), (26), (27), (28), (29), (30) and (37). Fine tailings launder, 150 feet, to waste dump.

The mill requires 16 men per 24 hours, divided into 2 shifts of 12 hours each: 2 engineers, 2 firemen, 2 foremen, 1 hoisting skip man, 2 stamp men, 1 hoist man, 1 breaker man, 2 jig men, 2 table men, 1 settling tank man. The engineers and firemen also look after the power for the smelter. Board costs $30 per month, and slack coal $3.50 per ton.

Power is furnished by two fire tube boilers, 48 inches diameter, 14 feet long with 52 tubes 3 inches diameter, running under a steam pressure of 95 pounds per square inch and burning 5 tons of slack coal per 24 hours, and an engine with cylinder 16 × 42 inches making 65 revolutions per minute.

Water is pumped from a distance of 40 feet and up a height of 43 feet from Silver Bow Creek by a Root rotary pump making 52 revolutions per minute and delivering 1,200 gallons per minute. Some water is also used over as indicated in the mill scheme.

The crude ore contains 3 to 8% copper and 3 to 10 ounces silver per ton; the concentrates contain 6 to 15% copper and 6 to 20 ounces silver, and the tailings contain 0.8 to 1.8% copper and 0.8 to 3.0 ounces silver per ton. One hundred tons of ore yield 35 to 40 tons of concentrates and 60 to 65 tons of tailings. The mill saves 70 to 85% of the copper and silver.

This mill has been enlarged to have a capacity of 500 tons per 24 hours, and the steam stamp has been given up on account of the large amount of slimes which it produced. Graded crushing by breakers and rolls is now used and concentrates are made by the jigs as coarse as 1 inch. Some of the tailings which formerly went to waste are now recrushed and treated on Wilflev tables (see § 493).

(*j*) COMPLEX JIGGING MILLS DRESSING NATIVE COPPER AT LAKE SUPERIOR, USING STEAM STAMPS, CLASSIFIERS, JIGS AND TABLES.

§ 707. This group includes Mills 44 to 48 inclusive. The mine rock carrying the native copper is either a rhyolite conglomerate, an amygdaloid, or a vein stone. In all of them the copper is in larger or smaller irregular jagged fragments scattered through the rock. When in large masses it is cut up in the mine by trenching the mass with chisels. Smaller masses are blasted out and cleaned by steam hammer, drop hammer or hand hammer. Sizes smaller still are crushed by steam stamps, in which the larger fragments are broken and then abraded into rounded nuggets until the time for cleaning out the mortar arrives. The smaller are severed from the rock and broken up or remain attached to the rock as included grains; these all pass out through the screen to the concentrating machines. The copper coming from the stamps takes the following forms which are easy or difficult of separation as indicated: large nuggets from the mortar, easy; compact rounded grains, easy; compact broken grains, easy; thin leaf-like grains, difficult; thin branching forms, difficult; copper included in rock, difficult; very fine abraded copper, difficult. The separation is also rendered difficult by heavy minerals epidote and iron oxide (probably martite or octahedral hematite). The metal worn off the stamp shoes and drill steel is present but in very small quantity.

The conglomerate mills have to contend with the fine abraded copper, the included grains and the thin flaky arborescent forms. The amygdaloid mills have the same except that the included grains are much less in amount. The latter mills can on this account bring down the copper contents of the tailings to a much lower percentage than the former. Mill 44 treats included grains by grinder, classifier and jigs. Mills 45, 46, 47 and 48 send middlings back to the steam stamp.

Rolls for crushing native copper rock have been tried and given up because of the large percentage of copper in thin forms which floated off in the jig tailings. Stamps break them up small enough to have normal settling capacity. The chief objection to stamps is the amount of very fine abraded copper made by them. The two directions to look for improvements are: (1) to catch the fine tank overflows and treat them; (2) to adopt measures to diminish the formation of abraded copper, by taking out copper nuggets earlier from the mortar. The schemes to do the latter are given at the ends of Mills 44 and 48 and the results of the experiments which led to the adoption of the scheme in Mill 48 have been given in § 118.

These mills use hydraulic classifiers upon quite coarse material (4.76 mm.). They seek to avoid losses of fines in jigging, which would result from the imperfections of hydraulic classifiers, by first running the material over roughing jigs which have a loose whole bed and thus deliver some sand into the hutch with the copper and then by re-treating these hutch products slowly and gently on finishing jigs.

The coupling up of two dissimilar machines to supplement each other, the one to make clean heads and the other to make clean tailings, occurs in these mills. The heads of the slime tables are enriched in Mills 45 and 46 by kieves and in Mill 47 by tye and kieve. The kieve tops go back to the tables. The tailings of the tables are considered sufficiently clean to throw away. In the very latest arrangement of mills (1902) the slime tables and Wilfley tables are coupled together in this same way, the former making clean tailings and the latter clean heads.

§ 708. MILL NO. 44. CALUMET AND HECLA MINING COMPANY, CALUMET, MICHIGAN.—Capacity 2,640 tons in 24 hours for each of the two mills. The

mill runs 24 hours per day, 6 days per week. The ore consists of the economic minerals native copper and a little native silver, and a gangue of rhyolite conglomerate carrying a little calcite, epidote and martite. The problem is to save the copper and silver. The ore is hoisted from the mine in skips holding 5,000 and 10,000 pounds and dumped upon (1).

There are eleven rock houses, one for each shaft, all alike and only one of them will be described.

Rock House.

1. One No. 1 grizzly with 3½-inch spaces. Oversize is hand picked on the grizzly into: (*a*) copper nuggets to (32); (*b*) waste used for filling; and (*c*) residue or milling rock to (2); undersize to (5).

2. One No. 1 Blake breaker, 24 × 36 inches, crushing to 12 inches. To (3).

3. One No. 2 grizzly with 3½-inch spaces. Oversize is hand picked on the grizzly into: (*a*) copper nuggets to (32); (*b*) waste for filling; and (*c*) residue to (4); undersize to (5).

4. One No. 2 Blake breaker, 17 × 24 inches, crushing to 3½ inches. To (5).

5. From (1), (3) and (4). Rock house bins, 40 × 50 feet and 10 to 20 feet deep, with double-V bottom and 14 gates. By gates and chutes to railroad cars hauled 5 miles to (6).

Mill.

There are two entirely independent mills, the Calumet and the Hecla, just alike, with 11 independent sections in each. Only one section of the Calumet mill will be described.

6. Mill bin, with flat bottom, holding about 1,000 tons. By gate to (7).

7. Picking chute. Copper nuggets to (32); rich copper rock to (8) just before clean up; wood, chips, etc., to waste; residue to (8).

8. From (7) and (9). One Leavitt steam stamp using a screen with 4.76-mm. round holes. Pulp by distributor to (10); residue in mortar at time of clean up to (9).

9. One No. 1 or cōver jig. 1-sieve cam driven spring return jig. There is only one jig for the whole eleven sections of the mill. Bottom skimmings and hutch by bucket to (32); top skimmings and tailings to (8).

10. From (8). Four No. 1 hydraulic classifiers, each with four spigots. 1st spigot to (11); 2d to (12); 3d to (13); 4th to (14); overflow to (22).

11. From (10) and (12). Four No. 2 jigs or No. 1 roughing jigs. 2-sieve Collom jigs. 1st and 2d bottom skimmings, 1st discharge and 1st hutch by jerking trough conveyor to picking table, where native silver is removed while the copper goes to (32); 2d discharge to (25); 2d hutch to (15); tailings to (19).

12. From (10) and (13). Four No. 3 jigs or No. 2 roughing jigs. 2-sieve Collom jigs. Bottom skimmings to (11); 2d discharge to (25); hutches to (16); tailings to (19).

13. From (10) and (14). Four No. 4 jigs or No. 3 roughing jigs. 2-sieve Collom jigs. Bottom skimmings to (12); hutches to (17); tailings to (33).

14. From (10). Four No. 5 jigs or No. 4 roughing jigs. 2-sieve Collom jigs. Bottom skimmings to (13); hutches to (18); tailings to (33).

15. From (11) and (16). Two No. 6 jigs or No. 1 finishing jigs. 3-sieve Collom jigs. 2d and 3d bottom skimmings to (25); 1st and 2d discharges to (31); hutches to (31); tailings to (33).

16. From (12). Two No. 7 jigs or No. 2 finishing jigs. 3-sieve Collom jigs. 2d bottom skimmings to (25); 3d to (15); 1st discharge to (31); hutches to (31); tailings to (33).

17. From (13). Two No. 8 jigs or No. 3 finishing jigs. 3-sieve Collom jigs. 1st bottom skimmings to (25); 2d to (21); 3d to (31); hutches to (31); tailings to (33).

18. From (14). Two No. 9 jigs or No. 4 finishing jigs. 3-sieve Collom jigs. Bottom skimmings and hutches to (31); tailings to (33).

19. From (11) and (12). Two No. 1 distributors each dividing the material into four parts. To (20).

20. Eight No. 10 jigs or rejiggers. 1-sieve Collom jigs. Bottom skimmings and discharge to (25); hutch to (21); tailings to (33).

21. From (17) and (20). Two No. 11 jigs or rejigger finishers. 2-sieve Collom jigs. Bottom skimmings to (25); hutches to (31); tailings to (33).

22. From (10) and (26). One No. 1 distributing tank with 9 spigots. Spigots by centrifugal pump and No. 2 distributor to upper decks of (23); overflow to (33).

23. Two No. 1 convex revolving slime tables each with two decks. Heads of upper deck to (31); middlings to lower deck; tailings to (33). Heads of lower deck to (31); middlings to (24); tailings to (33).

24. Two No. 2 convex revolving slime tables, each with two decks. As all the sections of the mill are never run at a time, the two No. 1 tables of an idle section receive the middlings from the ten tables of five sections which are running. Heads to (31); tailings to (33).

25. From (11), (12), (15), (16), (17), (20), (21). Heberli mills. There are two of these for eleven sections of the mill. They grind to 0.1 inch. To (26).

26. Two No. 2 hydraulic classifiers for eleven sections of the mill, each with three spigots. 1st spigot to (27); 2d to (28); 3d to (29); overflow to (22) in one section of the mill in addition to its regular work.

27. Two No. 12 jigs or No. 1 grinder jigs. 3-sieve Collom jigs. Bottom skimmings to (31); 1st and 3d discharges to (31); 1st and 2d hutches to (31); 3d to (30); tailings to (33).

28. From (26). Two No. 13 jigs or No. 2 grinder jigs. 3-sieve Collom jigs. Bottom skimmings to (31); 3d discharge to (31); 1st hutch to (31); 2d and 3d to (30); tailings to (33).

29. From (26). Two No. 14 jigs or No. 3 grinder jigs. 3-sieve Collom jigs. Bottom skimmings to (31); 3d discharge to (31); hutches to (30); tailings to (33).

30. From (27), (28), (29). Two No. 15 jigs or grinder finishing jigs. 2-sieve Collom jigs. Bottom skimmings and hutches to (31); tailings to (33).

31. From (15), (16), (17), (18), (21), (23), (24), (27), (28), (29), (30). Settling tanks for concentrates. Settlings to (32); overflow to (33).

32. From (1), (3), (7), copper nuggets. From (9), (11), (31), copper concentrates called mineral copper. By shipping car to smelter.

33. From (13), (14), (15), (16), (17), (18), (20), (21), (22), (23), (24), (27), (28), (29), (30), (31). Two sand wheels, one for each mill, lifting to main waste launder delivering to the lake. There are also two more sand wheels, held in reserve.

Power for the steam stamps of both mills and the mill engine is furnished by 17 Belpair boilers running under a steam pressure of 120 pounds per square inch. A triple expansion engine with cylinders 18 × 60, 27¾ × 60, and 48 × 60 inches, making 58 revolutions per minute and developing 750 indicated horse power, runs the two mills, the two sand wheels and the machine shop. Large spare engines with single expansion are installed in various departments to be used in case of accident. Each rock house has an engine indicating 60 to 65 horse power.

Water is pumped from Torch Lake by a triple expansion pumping engine with two differential plungers. It delivers 40,000,000 gallons per 24 hours, which is the amount used when 16 sections of the mills are in use. The maximum capacity is 60,000,000 gallons. There are three smaller pumps for use in case of break.

The mill gives out no analyses. The ore formerly ran 4 or 5% copper,[56] but it is now running somewhat less than these figures. The concentrates contain about 65% copper.

One section of the mill has been used for experimental work for designing the new mill with six sections and has undergone many changes. Otherwise the mill has been very little changed except for the introduction of shaking picking tables in place of the picking chutes (7).

The new mill is radically different from the old. The six sections are alike and one section is about as follows: The rock is brought by a belt conveyor to the Leavitt steam stamp which has a 4.76-mm. cylindrical screen and also "mortar discharges" or "mortar jigs." These consist of four openings in the side of the mortar, each about $1\frac{1}{2} \times 12$ inches, just below the lower edge of the screen. Each opening leads down to a sieve below with 25-mm. holes. The sieves have connections with jigging plungers which subject the material on the sieves to a regular jigging action. The coarser nuggets of copper accumulate on the sieve and are removed periodically through a side opening; the smaller copper nuggets which pass through the sieve into the hutch are likewise drawn off at intervals. The stamped rock issuing through the 4.76-mm. screen goes to two large 2-sieve jigs followed by two large 3-sieve jigs. By this arrangement the material is treated successively by five sieves, the tailings from the first going to the second and so on. The first sieves yield concentrates to the smelter and slimes, taken off by a special arrangement, to slime tables after being unwatered. The second sieves yield discharge to smelter and hutch to two little hydraulic classifiers. The third, fourth and fifth sieves yield discharges to a Chili mill, hutches to the two little hydraulic classifiers and final tailings to waste. The product of the Chili mill is separated on two Wilfley tables into clean heads and tailings. The two little hydraulic classifiers yield spigot product to smelter and overflow, after unwatering, to two Wilfley tables. The products of these are clean heads and tailings, and middlings which are re-treated on another Wilfley. The middlings from this last Wilfley go to the above mentioned Chili mill. The tailings of the convex revolving slime tables treating slimes from the first sieves, are waste while the concentrates are further enriched on four Wilfley tables making clean heads and tailings, and middlings which are unwatered and separated on one more Wilfley into clean heads to smelter and tailings to waste.

§ 709. MILL NO. 45. FRANKLIN MINING COMPANY, HANCOCK, MICHIGAN.—Capacity 450 tons in 24 hours. The mill runs 24 hours per day, six days per week. The ore consists of the economic mineral native copper and a little native silver, filling cavities in a gangue of soft amygdaloid rock. The problem is to save the copper and silver. The rock is brought from the rock house to the mill by an incline in cars holding $2\frac{1}{4}$ tons each and dumped upon (1).

1. Two receiving bins each holding 75 tons. To (2).

2. Three picking chutes. Wood and barren rock to waste; rich copper rock to (3) just before clean up; residue to (3).

3. From (2), (4), (6), (7), (8), (9), (10). Three Ball steam stamps using screens with 4.76-mm. round holes. Pulp to (5); residue in mortar at time of clean up to (4).

4. A trough washer. Heads called cōver work, after hand picking for native silver, to smelter as No. 1 copper; tailings to (3).

5. From (3). Six No. 1 hydraulic classifiers, each with three spigots. 1st spigots to (6); 2d to (7); 3d to (8); overflow to (14).

6. Six No. 1 jigs. 2-sieve Collom jigs. 1st bottom skimmings, after hand picking for silver, to smelter as No. 1 copper; 2d to (3); hutches to (9); tailings to (18).

7. From (5). Six No. 2 jigs. 2-sieve Collom jigs. 1st bottom skimmings to smelter as No. 1 copper; 2d to (3); hutches to (9); tailings to (18).

8. From (5). Six No. 3 jigs. 2-sieve Collom jigs. 1st bottom skimmings to smelter as No. 1 copper; 2d to (3); hutches to (10); tailings to (18).

9. From (6) and (7). Six No. 4 jigs or No. 1 finishing jigs. 3-sieve Collom jigs. 1st and 2d bottom skimmings to smelter as No. 2 copper; 3d to (3); 1st and 2d hutches to smelter as No. 2 copper; 3d to (13); tailings to (11).

10. From (8). Six No. 5 jigs or No. 2 finishing jigs. 3-sieve Collom jigs. Products like (9).

11. From (9) and (10). Two No. 1 runs used alternately. Settlings to (13); overflow to (12).

12. One No. 2 run. Settlings to (13); overflow to (18).

13. From (9), (10), (11), (12). Four No. 6 jigs or rejiggers. 1-sieve Collom jigs. Hutches to smelter as No. 2 copper; tailings to (18).

14. From (5) and (17). Three No. 1 distributing tanks. Spigots to (15); overflow to (18).

15. Four convex revolving slime tables. Heads to (16); middlings to (17); tailings to (18).

16. One kieve. Tops or tailings to (17); middles returned to kieve; bottoms or heads to smelter as No. 3 copper.

17. From (15) and (16). One feeder and centrifugal pump with 2-inch discharge pipe. To (14).

18. From (6), (7), (8), (12), (13), (14), (15). Sand wheel lifting 444 tons of sand, and 3,744,000 gallons of water per 24 hours, up 22 feet to waste launder delivering to Portage Lake.

The coarse part of the mill is divided into three sections so that one-third or two-thirds of the mill can be shut down if desired.

Power is furnished by an engine run by the exhaust steam from the three steam stamps, receiving it at a pressure of 7 pounds per square inch and delivering it into a vacuum equal to 23½ inches of mercury obtained by a jet condenser and an air pump. The engine has a cylinder 36 × 48 inches and makes 60 revolutions per minute. A portion of the exhaust steam also runs the Cornish pump which supplies the water for the mill. Any excess is used for heating the feed water to the boilers.

One hundred tons of rock yield 330 to 400 pounds of cōver work from (4). 2,200 pounds of mineral copper from the other machines and about 98½ tons of tailings. The four rejiggers (13) save about 50 pounds of mineral per day containing 25% copper.

This mill was burned and a new mill has been constructed with a capacity of 1,350 tons in 24 hours. It has three modern steam stamps and the arrangement of the washing machines is according to the regular Lake Superior practice, using roughing jigs, finishing jigs and slime tables much like Mill 47. Power is furnished by two Stirling water tube boilers of 500 horse power each and an Allis-Corliss engine with cylinder 16 × 22 inches. Water is supplied by an Allis pump with a capacity of 15,000,000 gallons per 24 hours.

§ 710. Mill No. 46. Osceola Consolidated Mining Company, Houghton County, Michigan.—Capacity 1,260 tons in 24 hours. The mill runs 24 hours per day, 6 days per week. The ore consists of the economic mineral native copper and a gangue of amygdaloid with a little calcite, prehnite and magnetite.

Rock similar to Mill 44 is also treated in one section of the mill. The problem is to save the copper. The rock is hoisted in skips holding 4,000 pounds and dumped upon (1).

There are two rock houses, just alike, of which only one will be described.

Rock House.

1. Two grizzlies with 3¼-inch spaces. Oversize to (2); undersize to (6).

2. Sledging and picking floor. Mass copper and largest rock lumps to (3): large rock lumps to (4); small rock to (5); fine stuff to (6); barren rock to waste dump.

3. Fall hammer. Cleaned mass copper to smelter; fine copper rock to (6).

4. From (2). One No. 1 Blake breaker, 14 × 22 inches, crushing to 4 inches. To (6).

5. From (2). One No. 2 Blake breaker, 13 × 20 inches, crushing to 4 inches. To (6).

6. From (1), (2), (3), (4), (5). No. 1 or rock house bin with a double-V bottom. By 8 chutes to hopper-bottomed cars holding 12½ tons, 5 miles to (7).

Mill.

7. No. 2 or mill bins with bottoms sloping 45°, holding about 2,600 tons. To (8).

8. Six picking chutes, fed with water. Rich copper rock to (9) just before clean up; wood, chips, etc., to waste; residue to (9).

9. From (8), (10), (12), (13), (14), (15), (16), (17), (18), (19), (20), (21), (22), (23). (25), (26), (27), (28), (29), (30), (31), (32). Six steam stamps; Nos. 1, 2, 3 and 4 are Ball stamps, No. 5 is a Cuyahoga and No. 6 is an Allis. They use screens with 4.76-mm. round holes. Pulp by six distributors to (11); residue in mortar at time of clean up to (10).

10. A trough washer. Heads, called cōver work, to smelter; tailings to (9).

11. From (9). Eighteen No. 1 hydraulic classifiers. No. 1 Ball stamp has three Lake Superior hog trough classifiers, each with four spigots. No. 2 Ball has two Lake Superior hog trough classifiers and one Tamarack classifier, each with four spigots; No. 3 and No. 4 Ball stamps each have three Tamarack classifiers with four spigots each. The Cuyahoga and Allis stamps each have three Tamarack classifiers with six spigots each. 1st spigots of the 6-spigot classifiers to (12); 2d to (13); 3d to (14); 4th to (15); 5th to (16); 6th to (17); overflow to (34). 1st spigots of the 4-spigot classifiers to (25); 2d to (26); 3d to (27); 4th to (28); overflow to (34).

The jigs are divided into six sections. Those for the Cuyahoga and Allis stamps are just alike and only the Allis section will be described. Those for each of the Ball stamps are alike and only one section will be described.

Jigs for Allis Section.

12. Three No. 1 jigs or No. 1 roughing jigs. 2-sieve Collom jigs. 1st bottom skimmings are No. 1 copper to (40); 2d discharge to (9); 1st hutch to (18); 2d to (19); tailings to (41).

13. From (11). Three No. 2 jigs or No. 2 roughing jigs. 2-sieve Collom jigs. 1st bottom skimmings are No. 1 copper to (40); 2d to (9); 1st hutch to (18); 2d to (19); tailings to (41).

14. From (11), (15), (16), (17). Three No. 3 jigs or No. 3 roughing jigs.

2-sieve Collom jigs. 1st bottom skimmings are No. 1 copper to (40); 2d to (9); 1st hutch to (20); 2d to (21); tailings to (41).

15. From (11). Three No. 4 jigs or No. 4 roughing jigs. 2-sieve Collom jigs. 1st bottom skimmings to (14); 2d to (9); 1st hutch to (20); 2d to (21); tailings to (41).

16. From (11). Three No. 5 jigs or No. 5 roughing jigs. 2-sieve Collom jigs. 1st bottom skimmings to (14); 2d to (9); 1st hutch to (22); 2d to (23); tailings to (41).

17. From (11). Three No. 6 jigs or No. 6 roughing jigs. 2-sieve Collom jigs. Products like (16).

18. From (12) and (13). One No. 7 jig or No. 1 finishing jig. 3-sieve Collom jig. 1st bottom skimmings are No. 2 copper to (40); 2d are No. 4 copper to (40); 3d to (9); 1st hutch is No. 2 copper to (24); 2d is No. 3 copper to (24); 3d, to be kieved, to (24); tailings to (41).

19. From (12) and (13). One No. 8 jig or No. 2 finishing jig. 3-sieve Collom jig. 1st bottom skimmings are No. 3 copper to (40); 2d are No. 4 copper to (40); 3d to (9); 1st hutch is No. 3 copper to (24); 2d is No. 4 copper to (24); 3d, to be kieved, to (24); tailings to (41).

20. From (14) and (15). One No. 9 jig or No. 3 finishing jig. 3-sieve Collom jig. 1st bottom skimmings are No. 2 copper to (40); 2d are No. 4 copper to (40); 3d to (9); 1st hutch is No. 2 copper to (24); 2d is No. 4 copper to (24); 3d, to be kieved, to (24); tailings to (41).

21. From (14) and (15). One No. 10 jig or No. 4 finishing jig. 3-sieve Collom jig. Products like (19).

22. From (16) and (17). One No. 11 jig or No. 5 finishing jig. 3-sieve Collom jig. 1st and 2d bottom skimmings are No. 4 copper to (40); 3d to (9); 1st hutch is No. 4 copper to (24); 2d and 3d, to be kieved, to (24); tailings to (41).

23. From (16) and (17). One No. 12 jig or No. 6 finishing jig. 3-sieve Collom jig. Products like (22).

24. From (18), (19), (20), (21), (22), (23). Three sets of settling tanks for concentrates, called "copper boxes," with 7 boxes in each set (see § 442). No. 1 quality copper to (40); No. 2 quality copper to (40); No. 3 quality copper to (40); No. 4 quality copper to (40); material to be kieved to (38); overflow to (41).

Jigs for One Ball Section.

25. From (11). Three No. 1 jigs or No. 1 roughing jigs. 2-sieve Collom jigs. 1st bottom skimmings are No. 1 copper to (40); 2d to (9); 1st hutch to 1st sieve of (29); 2d to 2d sieve of (29); tailings to (41).

26. From (11), (27), (28). Three No. 2 jigs or No. 2 roughing jigs. 2-sieve Collom jigs. 1st bottom skimmings are No. 1 copper to (40); 2d to (9); 1st hutch to 1st sieve of (30); 2d hutch to 2d sieve of (30); tailings to (41).

27. From (11). Three No. 3 jigs or No. 3 roughing jigs. 2-sieve Collom jigs. 1st bottom skimmings to (26); 2d to (9); 1st hutch to 1st sieve of (31); 2d hutch to 2d sieve of (31); tailings to (41).

28. From (11). Three No. 4 jigs or No. 4 roughing jigs. 2-sieve Collom jigs. 1st bottom skimmings to (26); 2d to (9); 1st hutch to 1st sieve of (32); 2d hutch to 2d sieve of (32); tailings to (41).

29, 30, 31, 32. From (25), (26), (27), (28). One each of Nos. 5, 6, 7 and 8 jigs or Nos. 1, 2, 3 and 4 finishing jigs. 3-sieve Collom jigs. Their products are disposed of on the same principle as in (18), (19), (20), (21), (22), (23).

33. From (29), (30), (31), (32). "Copper boxes." Products like (24).

The Whole Mill.

34. From (11) and (39). Four No. 1 distributing tanks: one for the Allis stamp with two spigots, one for the Cuyahoga stamp with two spigots, one for each pair of Ball stamps with three spigots each. Spigots to (35); overflow to (41).

35. Ten convex revolving slime tables. Heads to (36); middlings to (39); tailings to (41).

36. Five No. 1 settling tanks. Each pair of slime tables has a double tank the halves of which are run alternately. Settlings to (38); overflow to (37).

37. One No. 2 settling tank. Settlings once in 24 hours to (39); overflow to (41).

38. From (24), (33) and (36). One kieve. Tops or tailings to (39); middlings returned to kieve; bottoms or heads are No. 4 copper to (40).

39. From (35), (37) and (38). Feed trough and a Hodge centrifugal pump with 2-inch discharge pipe and making 375 revolutions per minute. To (34).

40. From (12), (13), (14), (18), (19), (20), (21), (22), (23), (24), (25), (26), (29), (30), (31), (32), (33), (38). Shipping cars. The four qualities of mineral copper are sent separately to the smelter.

41. From (12), (13), (14), (15), (16), (17), (18), (19), (20), (21), (22), (23), (24), (25), (26), (27), (28), (29), (30), (31), (32), (33), (34), (35), (37). Tailings launder to Torch Lake.

This mill is in six independent sections. The Allis stamp section treats conglomerate from the Tamarack Junior mine. No. 1 Ball treats amygdaloid from the Kearsarge mine, and the remaining stamps treat amygdaloid from the Osceola mine.

Power for the mill is derived from ten fire tube boilers, 28 feet long, 60 inches diameter (two are 72 inches), with tubes 3 and 3½ inches diameter and 16 feet long, running under a steam pressure of 100 pounds per square inch. Seven of the boilers are for steam stamps, one for the mill engine and pump and two for spare. The mill engine has a cylinder 24 × 32 inches, makes 62 revolutions per minute, cuts off at one-quarter stroke and develops 90 indicated horse power. Power for the rock house is derived from two Reynolds upright boilers which also supply steam for hoisting. They are 20 feet long, 84 inches diameter, with tubes 3 inches diameter and 16 feet long, running under a steam pressure of 100 pounds per square inch. An Allis engine is used with cylinder 10 × 30 inches, making 90 revolutions per minute, cutting off at one-quarter stroke and developing 20 horse power.

Water is pumped from Torch Lake by an Allis compound vertical pump, a distance of 300 feet and up 55 feet, delivering 12,000,000 gallons per 24 hours.

According to the annual report, in 1899 the rock contained 1.159% copper. the concentrates 72%, and the tailings 0.187%. One hundred tons of rock yielded 1.35 tons of concentrates and 98.65 tons of tailings. The mill saved 84% of the copper.[807]

There has been recently built another mill in two parts, one with three steam stamps made by the Nordberg Works and one with four. They are arranged according to the new coarse stamping scheme as outlined at the end of Mill 48. The three-stamp part has a capacity of 1,600 tons per 24 hours. Each stamp has a cylinder of 20 inches diameter, 24 inches stroke, and strikes 100 blows per minute under a steam pressure of 95 pounds per square inch. This new mill has reduced the value of the tailings to 0.065% copper, has reduced the cost of milling per ton from $0.29 to $0.22, and has increased the percentage saving considerably. The product of the Krause discharge, together with the spigot

of the little hydraulic classifier, contains 56% of the total copper recovered in the mill.

A new pump for supplying this mill and Mill 48 has a capacity of 40,000,000 gallons per 24 hours. It is a triple expansion Nordberg with steam cylinders 22, 40 and 60 inches in diameter, and three water cylinders 30 inches in diameter with 52-inch stroke.

§ 711. MILL No. 47. QUINCY MINING COMPANY, HANCOCK, MICHIGAN.—Capacity of the mill is 1,700 to 1,900 tons per 24 hours. The mill runs 24 hours per day, six days per week. The ore consists of the economic mineral native copper in grains and masses occasionally as large as 300 tons, and a gangue of amygdaloid. The problem is to save the copper. The rock is hoisted in skips and goes ordinarily to (1), or if mass copper, to (2).

There are three rock houses just alike, of which only one will be described.

Rock House.

1. Two No. 1 grizzlies with 2¾-inch spaces. Oversize to (2); undersize to (7).

2. Sledging and picking floor. Large lumps to (3); rock with mass copper to (4); small copper rock to (6); small mass copper to (8); barren rock, suitable for building, to waste dump.

3. Drop hammer. Rock with mass copper to (4); small copper rock to (6); small mass copper to (8).

4. From (2) and (3). One No. 1 Blake breaker, 18 × 24 inches, crushing to 5 inches. Mass copper, picked out, to (8); residue to (5).

5. Two No. 2 Blake breakers, 9 × 15 inches, crushing to 2¾ inches. To (7).

6. From (2) and (3). Two No. 3 Blake breakers, 13 × 20 inches, crushing to 3 inches. To (7).

7. From (1), (5) and (6). No. 1 bin for milling rock, with double V-bottom, holding 3,000 tons. By 10 gates and chutes to hopper bottom cars holding 17 tons, and thence 6½ miles to (11).

8. From (2), (3) and (4). No. 2 bin for mass copper. By gate to (9).

9. Steam hammer. Cleaned mass copper to smelter; rich copper rock to (10).

10. One No. 3 bin for rich milling rock. By gate and chute to special car and thence to (11).

Mill.

11. From (7) and (10). No. 4 or receiving bin, holding about 3,000 tons, with flat bottom and divided into five sections. One section is further divided into two parts, one part to receive stuff from (10). To (12).

12. Five picking chutes. Rich copper rock to (13) just before clean up; wood, chips, etc., to waste; residue to (13).

13. From (12), (14), (15), (16), (18), (19). Five Allis steam stamps using screens with 4.76-mm. round holes. Pulp by five No. 1 distributors to (17); residue in mortar at time of clean up to (14).

14. Wash trommel. Coarse material hand picked into copper to (36) and rock to (13); fine material to (15).

15. One No. 2 grizzly with 1-inch spaces. Oversize hand picked into copper to (36) and rock to (13); undersize to (16).

16. One No. 1 or cover jig. A 1-sieve cam driven spring return jig. Discharge is No. 1 copper to (36); hutch to (17); tailings to (13).

17. From (13) and (16). Twenty No. 1 hydraulic classifiers, each with four spigots. 1st spigots to (18); 2d to (19); 3d to (20); 4th to (21); overflow to five of the tanks (28).

18. Twenty No. 2 jigs or No. 1 roughing jigs. 2-sieve Collom jigs. 1st bottom skimmings to (26) as No. 1 copper; 2d to (13); 1st hutch to (22); 2d to (23); tailings to (37).

19. From (17), (20), (21). Twenty No. 3 jigs or No. 2 roughing jigs. 2-sieve Collom jigs. 1st bottom skimmings to (36) as No. 2 copper; 2d to (13); 1st hutch to (22); 2d to (23); tailings to (37).

20. From (17). Twenty No. 4 jigs or No. 3 roughing jigs. 2-sieve Collom jigs. Bottom skimmings to (19); 1st hutch to (24); 2d to (25); tailings to (37).

21. From (17). Twenty No. 5 jigs or No. 4 roughing jigs. 2-sieve Collom jigs. Products like (20).

22. From (18) and (19). Ten No. 6 jigs or No. 1 finishing jigs. 3-sieve Collom jigs. 1st bottom skimmings to (26) as No. 2 copper; 2d to (36) as No. 2 copper; 3d to (36) as No. 3 copper; 1st hutch is No. 2 copper to (27); 2d, No. 2 copper, to (27); 3d, No. 3 copper for smelter or to be kieved, to (27); tailings to (37).

23. From (18), (19), (24), (25). Ten No. 7 jigs or No. 2 finishing jigs. 3-sieve Collom jigs. Bottom skimmings to (36) as No. 3 copper; 1st hutch, No. 3 copper, to (27); 2d, No. 3 copper, to smelter or to be kieved, to (27); 3d, No. 3 copper, to be kieved, to (27); tailings to (37).

24. From (20) and (21). Ten No. 8 jigs or No. 3 finishing jigs. 3-sieve Collom jigs. Bottom skimmings to (23); 1st hutch, No. 2 copper, to (27); 2d and 3d, No. 3 copper, to be kieved, to (27); tailings to (37).

25. From (20) and (21). Ten No. 9 jigs or No. 4 finishing jigs. 3-sieve Collom jigs. Products like (24).

26. From (18) and (22), separately. One picking table. Native silver to market; native copper of No. 1 quality to (36).

27. From (22), (23), (24), (25). Ten sets of settling tanks for concentrates, called "copper boxes" with eleven boxes in each set. For example, one set has three boxes each about $1\frac{1}{2} \times 2$ feet, to receive the hutches of two No. 6 jigs, three similar boxes to receive the hutches of two No. 7 jigs and five boxes, each about 2×3 feet, in series to receive the overflow of the smaller boxes. No. 2 quality copper to (36); No. 3 quality copper to (36); material to be kieved to (31); overflow to (37).

28. From (17) and (35). Six No. 1 distributing tanks each with four spigots. Spigots to (29); overflow to (37).

29. Twenty-four convex revolving slime tables mounted two on a shaft. Heads to (30); middlings to (35); tailings to (37).

30. Six double No. 1 settling tanks, the halves of each used alternately. Settlings to (31); overflow to (37).

31. From (27) and (30) separately. One tye. Heads to (32); tailings to (34).

32. From (31) and (34). One No. 1 kieve. 1st treatment. Tops or tailings to (35); middles returned to (32); bottoms or heads to (33).

33. No. 1 kieve. 2d treatment. Tops to (35); middles returned to (33); bottoms to (36).

34. From (31). One No. 2 kieve. Tops to (35); middles returned to (34); bottoms to (32).

35. From (29), (32), (33), (34). A box feeder and centrifugal pump with a $2\frac{1}{2}$-inch discharge pipe, making 522 revolutions per minute. To one of the tanks (28).

36. From (14), (15), (16), (19), (22), (23), (26), (27), (33). The different qualities of mineral are shipped in cars to the smelter.

37. From (18), (19), (20), (21), (22), (23), (24), (25), (27), (28), (29), (30). Waste launder to Torch Lake.

This mill has five sections, of which one or all may be run at the same time.

The labor required in a rock house is 16 men per 24 hours.

Power for the mill is derived from steam boilers and an Allis engine with cylinder 16 × 42 inches, receiving steam under 100 pounds pressure per square inch, making 78 revolutions per minute and cutting off at ¼ stroke. Each steam stamp uses 100 horse power and its valves and washing machines require 13 horse power, making the total horse power of the mill 565 and 10 horse power for the electric lights. In each rock house there is a steam engine with cylinder 16 × 42 inches, running under a pressure of 80 pounds per square inch, cutting off at ⅛ stroke and developing 75 to 80 indicated horse power.

Water for the mill is raised 80 feet from Torch Lake by an Allis pump delivering 12,000,000 gallons in 24 hours.

In 1898 the rock yielded about 1.5% refined copper which means that it contained about 2% copper. The mass copper from the mill contains about 90% copper, No. 1 quality mineral contains about 93% copper, No. 2 about 83%, No. 3 about 43%, and the average of all is about 80% copper. Of the rock mined, about 10% is rejected as waste in the mine and in the rock house. In the rock house 100 tons of rock yield about 30 tons of mass copper rock for the steam hammer and about 70 tons of milling rock. About ¼ of the concentrates is mass copper from the rock house and ¾ are from the mill.

In this mill the forty Nos. 6, 7, 8, and 9 jigs have been replaced by 12 Wilfley tables. Twelve slime tables, that is, those in three sections of the mill have also been replaced by Wilfley tables.

Water is lifted to the mill by three pumps with a combined capacity of 21,000,000 gallons per 24 hours.

A second mill has been built to supplement the first, with a capacity of 1,200 tons in 24 hours. It contains three Allis steam stamps and is similar to the first mill except that there are 24 Wilfley tables; that is, eight Wilfley tables take the place of eight jigs (Nos. 6, 7, 8 and 9 jigs) and four slime tables. Another departure from the old mill is that one of the new stamps has the coarse stamping scheme described at the end of Mill 48. The boiler house has four Wickes vertical water tube boilers of 250 horse power each. Water is supplied by an Allis triple expansion pump rated at 16,000,000 gallons and capable of lifting 20,000,000 gallons per 24 hours.

§ 712. MILL NO. 48. TAMARACK MINING COMPANY, HOUGHTON COUNTY, MICHIGAN.—Capacity 1,500 tons in 24 hours. The mill runs 24 hours per day, six days per week. The ore and problem are the same as those of Mill 44. The ore is hoisted on cages in cars holding 5,000 pounds, and dumped upon (1). There are two rock houses, just alike, of which only one will be described.

Rock House.

1. Three No. 1 grizzlies with 4-inch spaces. Oversize to (2); undersize to (5).

2. Spalling and picking floor. Large lumps to (3); medium lumps, broken by hand sledge, to (4); small lumps to (4); copper nuggets to (30); barren rock to waste dump.

3. Drop hammer, crushing to about 12 inches. To (4).

4. From (2) and (3). Five No. 1 Blake breakers. Two are 18 × 24 inches and three are 8 × 15 inches, crushing to 4 inches. To (6).

5. From (1). Three No. 2 grizzlies with 3-inch spaces. Oversize is hand

picked into barren rock to waste dump and copper rock to (6); undersize to (6).

6. From (4) and (5). No. 1 or rock house bin, 46 × 70 × 24 feet deep. By 16 gates and chutes to cars holding 12½ tons and thence 5 miles to (7).

Mill.

Fig. 520 shows the classifiers and jigs for one section of the mill.

7. No. 2 or mill bins with flat bottoms. By gates to (8).

8. Five picking chutes, fed with water. Wood, chips, etc., to waste; copper nuggets to (30); residue to (9).

9. From (8), (10), (13), (14), (15), (16). Five Allis steam stamps, using screen with 4.76-mm. round holes. Pulp by five No. 1 distributors or split launders to (11); residue in mortar at the time of clean up to (10).

10. A trough washer. Heads, called cōver work, to (30); tailings to (9).

11. From (9). Twenty No. 1 hydraulic classifiers, each with four spigots. 1st spigots to (12); 2d to (14); 3d to (15); 4th to (16); overflow to (24).

12. Twenty No. 2 hydraulic classifiers, each with one spigot. Spigot, No. 1 copper, to (30); overflow to (13).

13. Twenty No. 1 jigs. 2-sieve Collom jigs. 1st bottom skimmings, No. 1 copper, to (30); 2d discharge to (9); 1st hutch to (17); 2d to (18); tailings to (31).

14. From (11). Twenty No. 2 jigs. 2-sieve Collom jigs. 1st bottom skimmings, No. 1 copper, to (30); 2d to (9); 1st hutch to (17); 2d to (18); tailings to (31).

15. From (11). Twenty No. 3 jigs. 2-sieve Collom jigs. 1st bottom skimmings, No. 2 copper, to (30); 2d to (9); 1st hutch to (19); 2d to (20); tailings to (31).

16. From (11). Twenty No. 4 jigs. 2-sieve Collom jigs. Bottom skimmings to (9); 1st hutch to (19); 2d to (20); tailings to (31).

17. From (13) and (14). Ten No. 5 jigs. 3-sieve Collom jigs with unwatering boxes before each sieve. 1st discharge, No. 2 copper, to (30); 2d and 3d bottom skimmings, No. 4 copper, to (30); 1st hutch, No. 2 copper, to (21); 2d, No. 4 copper, to (21); 3d, to be rejigged, to (21); tailings to (31); overflow of unwatering boxes to (23).

18. From (13) and (14). Ten No. 6 jigs. 3-sieve Collom jigs, with unwatering boxes before each sieve. 1st discharge, No. 3 copper, to (30); 2d and 3d bottom skimmings, No. 4 copper, to (30); 1st hutch, No. 3 copper, to (21); 2d, No. 4 copper, to (21); 3d, to be rejigged, to (21); tailings to (31); overflow of unwatering boxes to (23).

19. From (15) and (16). Ten No. 7 jigs. 3-sieve Collom jigs, with unwatering boxes before each sieve. Products like (18).

20. From (15) and (16). Ten No. 8 jigs. 3-sieve Collom jigs, with unwatering boxes before each sieve. Bottom skimmings, No. 4 copper, to (30); 1st and 2d hutches, No. 4 copper, to (21); 3d, to be rejigged, to (21); tailings to (31); overflow of unwatering boxes to (23).

21. From (17), (18), (19), (20). Ten sets of "copper boxes" similar to those of Mill 46, ¶24. No. 2 quality copper to (30); No. 3 quality copper to (30); No. 4 quality copper to (30); material to be rejigged to (22); overflow to (23).

22. No. 9 jigs called rejiggers. Details unknown, but they probably yield concentrates to (30); and tailings to (31).

23. From (17), (18), (19), (20), (21). Ten catch launders, each 2 × 36 feet. Settlings to (25); overflow to (31).

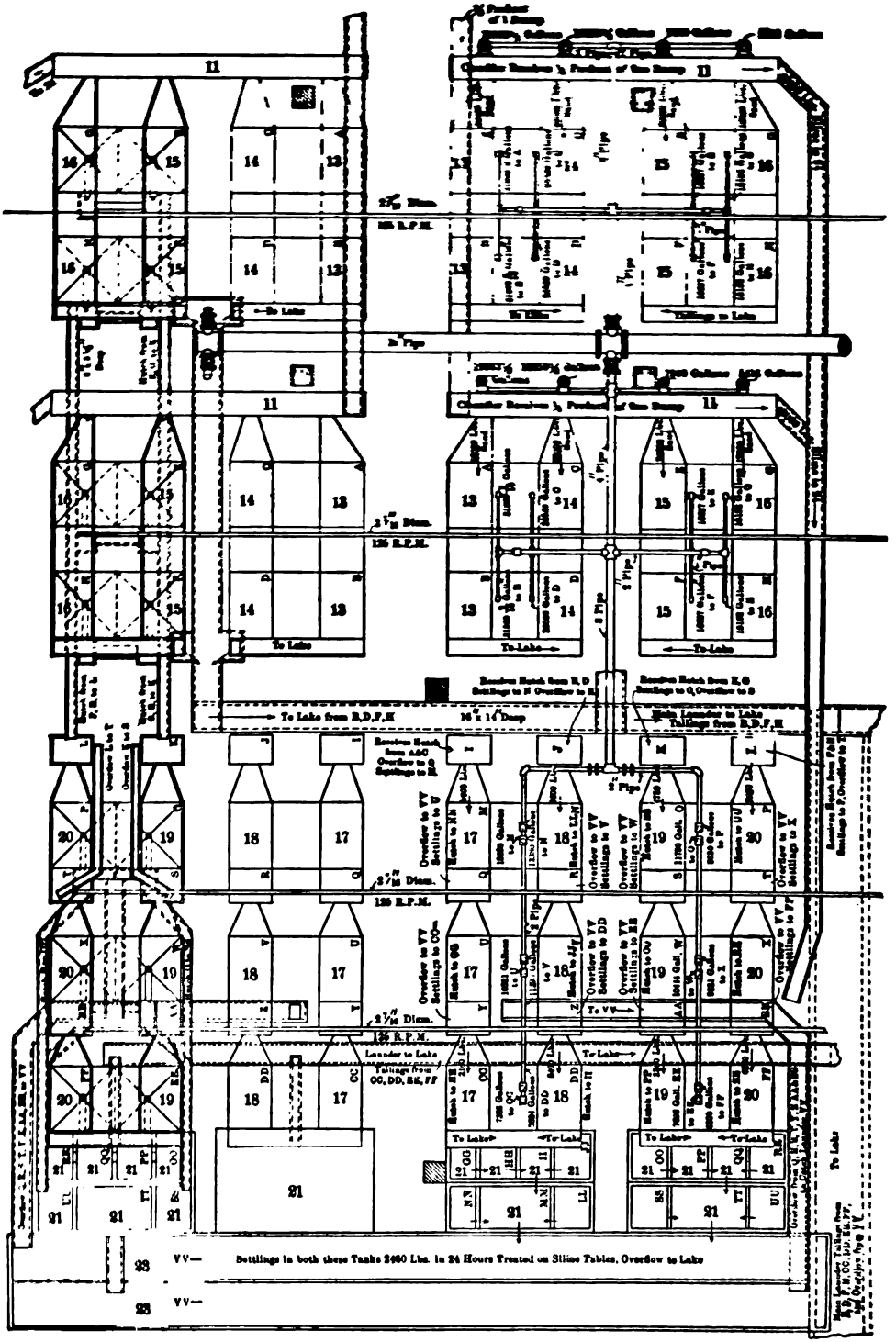
To Lake
To Lake from B,D,F,H
Tailings to Lake
Overflow to VV
Settlings to VV
To VV
Settlings in both these Tanks 2460 Lbs. in 24 Hours Treated on Slime Tables, Overflow to Lake
To Lake
To Lake

FIG. 520.—PLAN OF CLASSIFIER AND JIGS OF ONE STAMP AT MILL 48.

24. From (11), and (29). Nine No. 1 distributing tanks, two each for four sections of the mill and one for the fifth section, each with four spigots. Spigots to (25); overflow to (31).

25. From (23) and (24). Eighteen convex revolving slime tables. Heads to (26); middlings to (29); tailings to (31).

26. Five No. 1 settling tanks, double tanks with the halves of each used alternately. Settlings to (28); overflow to (27).

27. One No. 2 settling tank. Settlings every 24 hours to (29); overflow to (31).

28. From (26). Two kieves. Tops or tailings to (29); middles returned to kieve; bottoms or heads, No. 4 copper, to (30).

29. From (25), (27), (28). Feeder and centrifugal pump with 2-inch discharge pipe, making 375 revolutions per minute. To (24).

30. From (2), (8), (10), (12), (13), (14), (15), (17), (18), (19), (20), (21), (22), (28). The copper nuggets are put into barrels, the concentrates from the jigs are brought down in pails to the barrels, those from the "copper boxes" and the kieves are shovelled direct to barrels. The barrels are packed with water, nailed and headed up and shipped to smelter.

31. From (13), (14), (15), (16), (17), (18), (19), (20), (22), (23), (24), (25), (27). Waste launder to lake.

This mill is in five sections, any number of which may be shut down without affecting the others.

Power for the mill is derived from eight fire tube boilers, 28 feet long, 5 feet diameter, with tubes 16 feet long and 3 inches diameter, running under a steam pressure of 100 pounds per square inch. Seven furnish steam for the stamps and one for the mill engine which is a Reynolds-Corliss with cylinder 14×30 inches, making 90 revolutions per minute, cutting off at $\frac{1}{4}$ stroke and developing 65 indicated horse power. Power in the rock house is derived from an engine with cylinder 16×30 inches, making 70 revolutions per minute, taking steam at 90 pounds pressure and cutting off at $\frac{1}{4}$ stroke.

Water is pumped from the lake by an Allis pump delivering 10,000,000 gallons per 24 hours.

The rock contains 1.5 to 2% copper; and the concentrates 65 to 70% copper. One hundred tons of mine rock (in 1899) yielded 2 tons of concentrates and 98 tons of tailings. The copper nuggets from (2) amount to about 6 tons per month. The waste removed in the rock house is about 7% of the total rock hoisted.

Since the above notes were taken this mill has made a great advance in graded stamping and concentrating and each section is more or less changed over to the following scheme: The steam stamp (9) has a circular mortar with 15.9-mm. holes in the screens and the issuing pulp goes to a little hydraulic classifier. The copper nuggets are not allowed to accumulate in the mortar and be cleaned out periodically, but are discharged by what is called the "Krause discharge." This consists of an opening in the side of the mortar about 12 inches above the top of the die and all the water that is used in stamping is introduced up into the mortar through this opening. The copper nuggets are heavy enough to pass through the opening and sink through the rising current of water and accumulate in a cylindrical pocket below. They are removed through the bottom of the pocket periodically after first closing off the upper end of the pocket by a valve. The little hydraulic classifier makes a spigot product which is clean copper to the smelter and overflow to a trommel with 6.35-mm. holes. The oversize of the trommel goes by a bucket elevator back to the stamp while the undersize passes on to the hydraulic classifiers (11) and is treated as in the old scheme except that Wilfley tables as

well as revolving slime tables are used for treating the fine stuff. Positive accelerated jigs have replaced the Collom jigs to a considerable extent. The improvement by the scheme is shown in two directions: 1st, the capacity of the stamp is raised from 300 tons to 400 tons per 24 hours; 2d, the loss due to slime copper in the tailings has been reduced very considerably and the per cent. of copper in the tailings is lowered. Another rock house has been built containing eight Blake breakers with the accompanying grizzlies and bins. A new mill has been constructed with three Nordberg steam stamps and arranged according to the improved scheme used in the old mill.

(*k*) MILLS USING FINE CRUSHING AND RIFFLE TABLES OF THE WILFLEY TYPE.

§ 713. This group includes Mills 49 and 50. The designers of certain recent mills, by using the riffle tables, have made great departures from the graded treatment which saves large grains of ore on jigs to prevent formation of slimes. Hallett in Mill 49 aims to reach the limit in size, 60 mesh more or less, beyond which there are practically no included grains, in order to do clean work whether of two or three mineral separation. Bartlett in Mill 50 aims to simplify both crushing and concentrating, in his construction account and running account, by single stage crushing to 8 mesh or finer and the treatment of the whole pulp on tables where two minerals are to be separated.

The single stage crushing to 8 mesh where the per cent. of concentrates is large is more expensive than graded crushing, since in the latter case a considerable amount of concentrates is saved coarser than 8 mesh and the crushing is reduced. Bartlett claims to offset this expense by the simplicity of his operation. The single stage crushing to 60 mesh is still more expensive and a great producer of slimes. Hallett claims to offset these disadvantages by the simplicity of his mill, by the cleaner work done and by the fact that the tables can treat the very fine slimes when suitably adjusted.

As the book goes to press (1903) riffle tables of the Wilfley type have been received to a most extraordinary extent; in fact, the use of the Wilfley table has probably spread more rapidly than any other machine in the history of concentration. But the adoption of fine crushing with only riffle tables to displace the complex jigging mill with its slime preventing graded treatment is still in the tentative stage. The mill men of the country have not been sufficiently convinced to adopt this new plan.

§ 714. MILL NO. 49. NEW SMUGGLER CONCENTRATOR, ASPEN, COLORADO.—Capacity 125 tons per 24 hours. The mill runs 24 hours per day, 7 days per week. The ore is the same as that of Mill 28. The problem is to save the lead (together with the iron) and the zinc separately. The ore is brought in bottom discharging cars to (1).

1. No. 1 or receiving bin. By automatic feeder, similar to Tulloch feeder, to (2).

2. A shaking grizzly. Oversize to (3); undersize to (4).

3. One No. 1 Dodge breaker, 11 × 15 inches, crushing to 2 inches. To (4).

4. From (2) and (3). One pair of No. 1 rolls, 36 × 14 inches, set close together, making 52 revolutions per minute. By No. 1 bucket elevator to (5).

5. Two No. 2 bins. By two automatic feeders, similar to Tulloch feeders. To (6).

6. Two 6-foot Trent Chili mills, using screens with so-called 60-mesh slots revolving 22½ times per minute. To (7).

7. From (6) and (17). Two No. 1 hydraulic classifiers. Meinecke classifiers, each with three spigots. 1st spigots to (9); 2d to (10); 3d to (11); overflow to (8).

8. Two No. 1 box classifiers each with five spigots. 1st spigots to (12); 2d to (13); 3d to (14); 4th to (15); 5th to (16); overflow to (30).

9. From (7). Two No. 1 Hallett tables. Lead concentrates to (28); middlings by Frenier sand pump to (17); tailings to (30); muddy water to (25).

10. From (7). Two No. 2 Hallett tables. Lead concentrates to (28); middlings to (18); tailings to (30); muddy water to (25).

11. From (7). Two No. 3 Hallett tables. Lead concentrates to (28); middlings to (19); tailings to (30); muddy water to (25).

12. From (8). Two No. 4 Hallett tables. Lead concentrates to (28); middlings to (20); tailings to (30); muddy water to (25).

13. From (8). One No. 5 Hallett table. Lead concentrates to (28); middlings to (21); tailings to (30); muddy water to (25).

14. From (8). One No. 6 Hallett table. Lead concentrates to (28); middlings to (22); tailings to (30); muddy water to (25).

15. From (8). One No. 7 Hallett table. Lead concentrates to (28); middlings to (23); tailings to (30); muddy water to (25).

16. From (8). One No. 8 Hallett table. Lead concentrates to (28); middlings to (24); tailings to (30); muddy water to (25).

17. From (9). One 5-foot Trent Chili mill using a screen with so-called 80-mesh slots. To (7).

18. From (10). One No. 9 Hallett table. Lead concentrates to (28); zinc concentrates to (29); tailings to (30).

19. From (11). One No. 10 Hallett table. Products like (18).

20. From (12). One No. 11 Hallett table. Products like (18).

21. From (13). One No. 12 Hallett table. Products like (18).

22. From (14). One No. 13 Hallett table. Products like (18).

23. From (15). One No. 14 Hallett table. Products like (18).

24. From (16). One No. 15 Hallett table. Products like (18).

25. From (9), (10), (11), (12), (13), (14), (15), (16). One No. 2 box classifier with two spigots. 1st spigot to (26); 2d to (27); overflow to (30).

26. One No. 16 Hallett table. Products like (18).

27. From (25). One No. 17 Hallett table. Products like (18).

28. From (9), (10), (11), (12), (13), (14), (15), (16), (18), (19), (20), (21), (22), (23), (24), (26), (27). Settling tanks or bins for lead concentrates which go to the drier and are then shipped to smelter.

29. From (18), (19), (20), (21), (22), (23), (24), (26), (27). Settling tanks or bins for zinc concentrates which are stored for a possible market later.

30. From (8), (9), (10), (11), (12), (13), (14), (15), (16), (18), (19), (20), (21), (22), (23), (24), (25), (26), (27). Tailings launder to waste.

The ore contains 5 to 20% lead and 30 to 35% zinc. The lead concentrates contain 60 to 75% lead and not over 6% zinc. The zinc concentrates contain 45% zinc and not over 1.5% lead. The tailings contain 0.9% lead.

The reader's attention is called to the very complete system of classification and of final concentration for the separation of three minerals, adopted in this mill, and also to the removal of muddy water from the table for separate treatment, thereby overcoming one of the sources of loss on riffle tables.

§ 715. MILL NO. 50. A BARTLETT MILL IN ARIZONA.[285]—Capacity 20 tons in 11 hours. The ore consists of the economic minerals galena, chalcopyrite, and blende and a gangue of tough hornblende and quartz. The problem is to save the lead in one product and the copper and zinc in another. The ore is brought by a tramway to the second story of the mill to (1).

1. One breaker, a Gates No. 2. To (2).

2. From (1) and (4). One bucket elevator, lifting 24 feet. To (3).

3. One trommel, 3 feet diameter and 6 feet long, with 8-mesh holes or finer. Oversize to (4); undersize to (5).

4. One pair of rolls, 30 × 12 inches, slow speed rolls of the Rogers type. To (2).

5. From (3). One bin with hopper bottom. To (6).

6. Two Bartlett tables. Lead concentrates to smelter; copper and zinc concentrates to smelter; tailings to (7).

7. Settling flume, 100 feet long and 4 feet wide with bottom sloping sidewise. Settlings hoed out into cars to waste dump; overflow to (8).

8. Four settling reservoirs in series, each 42 × 25 × 6 feet deep. Settlings flushed out monthly to waste; water from the last reservoir is pumped back to the mill.

The labor required is four men: 1 engineer, 1 breaker man, 1 table man, and 1 man to run in the ore and take care of tailings.

Power is furnished by a 50-horse power boiler and a 35-horse power engine.

The water available for use in the mill and boiler is 5,000 gallons per day not including that pumped back from settling reservoirs. The moisture in the tailings is 500 to 600 gallons per day.

Owing to the excessive amount of zinc in the ore (20%) about 15% has to be carried into the tailings.

(*l*) PLANTS WORKING FOR GOLD BY HYDRAULICKING OR DREDGING.

§ 716. This group includes a general description of a hydraulicking plant, Mills 51 and 52 on dredging, followed by general remarks on dredging.

HYDRAULICKING is the name given to the method of excavating gravel by a powerful jet of water or a flowing stream of water whereby the gravel is washed away, leaving the gold behind or dropping it in riffles in the conveying sluice.

Hydraulicking usually requires a high head of water; in such cases a working plant may consist of:—a dam and reservoir for storing water; means of conveying water to a high point near the gravel mine, consisting of ditches, flumes, and pipe siphons, and a pressure box with screen and sand trap; means of delivering powerful jets upon the gravel bank, consisting of pipes, branches, valves, air cushion, and hydraulic giants; means of handling the gravel and water consisting of guide boards, head sluice with riffles, undercurrents with riffles, tail sluice with riffles; means of cleaning up, consisting of derrick, wheelbarrows, pick, shovel, knives, clean up tanks and pans, which save the gold.

A gravel property may sometimes be worked without a high head, simply using the water from a stream to cut away the foot of the gravel bank as it flows by, forcing it by suitable guide boards directly against the bank. This takes the place in the above plant of all the parts down to and including the hydraulic giant. Hydraulicking has been treated so fully by Bowie that the author will not go into further details regarding it, but will refer the reader to Bowie,[4] Evans[16] and Longridge.[82]

A method of hydraulicking with a centrifugal pump is used in New South Wales.[185] An excavation is made in the gold-bearing ground, filled with water and a pontoon bearing the pumping machinery is floated therein. The water is then pumped out so that the pontoon rests on the bottom, the banks are hydraulicked to a sump by a stream from the centrifugal pump and from the sump the material is pumped up to the riffle sluices. When the ground has been worked within the radius of the pump, then the excavation is allowed to fill with water and the pontoon floated to a new position and the operation repeated.

A scheme similar to this is used on the Snake River, Idaho. The chief differ-

ence is in the absence of the pontoon, the centrifugal pump being mounted on the bank.[357]

§ 717. GOLD DREDGING is a process that has been developed very rapidly during recent years. Originally confined to the beds of the rivers, it is now applied to the river banks and even to land at some distance from a stream. It has the advantage that it is able to work large quantities of material at a low cost and with a small consumption of water. Unlike hydraulicking, it does not fill the rivers with débris and damage agricultural lands.

The author is unable to refer the reader to any treatise on this subject, and will therefore give the details of two dredges, followed by a short general discussion which, owing to lack of space, will be in no way commensurate with what the importance of the subject deserves.

§ 718. MILL NO. 51. A GOLD DREDGING PLANT AT YREKA, CALIFORNIA.—Theoretical capacity 2,000 cubic yards in 24 hours, using the 2-cubic yard dipper; but actual capacity is not over 1,600 cubic yards, or even much less, owing to the presence of large boulders and hard bed rock. The dredge runs 24 hours per day. The material is auriferous gravel, sometimes cemented together, consisting of the economic mineral native gold mixed with boulders, gravel and sand. The problem is to save the gold. All the machinery of the dredge is mounted on a scow 70 feet long, 54 feet wide and 9½ feet deep. There are three spuds, two in front and one in the rear, each 24 × 24 inches. Each spud can be raised or lowered by means of wire ropes from hoisting drums, passing over pulleys at the top and bottom of the spuds. For moving the dredge there are also six guy lines of wire ripe, two on each side and one on each end. The material is raised by (1).

1. A dipper dredge (steam shovel type) with a capacity of either one or two cubic yards, suspended from a boom and dipper rod. The dipper has from 40 to 60 tons thrust on its edge. Bed rock of slate and shale is easily cut by using the dipper holding one cubic yard and having two or three prongs on its front edge. A special rubber flange keeps the door of the dipper perfectly tight. The dredged material is dumped upon (2).

2. A flat hopper on which the clay and cement are disintegrated by a powerful jet of water from a steam pump and the largest boulders removed by hand out through a side chute to waste. To (3).

3. A trommel 3½ feet diameter, 20 feet long, sloping 1½ inches per foot or 7° 7′ (slope adjustable), of rolled steel, with the holes tapering inwards to prevent clogging. Sectional with ¾, ½, ⅜ and ¼-inch round holes. Oversize to (4); undersize by distributor to (6).

4. A sluice with riffles. Heavy material caught in riffles and cleaned out monthly to (9); residue to (5).

5. A bucket elevator or "stacker" which slopes out over the stern of the dredge and delivers the waste material at some distance behind and above the dredge.

6. From (3). Twelve No. 1 tables, six on each side of the trommel. Inclined stationary tables, each 4 feet long and 32¾ inches wide, covered by cotton cloth overlaid with cocoa matting on top of which are expanded metal riffles. The matting is taken off every 6 to 8 hours and the adhering gold and black sand washed off in (9); tailings to (7).

7. Twelve No. 2 tables. Like (6). Gold and black sand to (9); tailings to (8).

8. A sluice with riffles in it. Heavy sand and gold cleaned out monthly to (9); tailings flow over the stern of the dredge to waste.

9. From (4), (6), (7) and (8). Tank for washing off the cocoa matting and receiving concentrates from riffles. Settlings pass out of a spigot to (10).

10. A sluice containing Brussels carpet, riffles and riffles containing mercury, having a total length of about 20 feet. Gold to market; residue to waste.

The labor required is ten men per 24 hours divided into two shifts of 12 hours each: 2 operators, 2 dipper tenders, 2 roustabouts, 2 firemen and 2 wood passers.

Power is furnished by steam. A compound engine runs the spud drums, the guy drums, the centrifugal pumps, the trommel and the stacker. A duplex engine with cylinders 12 × 18 inches does the hoisting of the dipper and a small engine with a 7-inch cylinder swings the dipper boom.

Water for the hopper (2) is supplied by a Blake pressure pump with 3-inch discharge pipe. Two centrifugal pumps with 10-inch discharge pipes, each delivering about 2,500 gallons per minute, supply water to the trommel (3) through a perforated spray pipe.

§ 719. MILL NO. 52. KIA ORA GOLD DREDGING COMPANY ON THE FEATHER RIVER, OROVILLE, CALIFORNIA.—Theoretical capacity 2,500 cubic yards per 24 hours, but it does not average half that amount. The dredge runs 24 hours per day, 6 days per week, as far as possible. The material is auriferous gravel and sand which overlies a bed rock of lava ash to a depth of 16 to 26 feet below water line. The problem is to save the gold. This dredge is working 3,000 feet from the river and a paddock 11 feet deep had first to be dug to float it. All the dredging machinery is mounted on a scow 70 feet long, 29 feet wide, and 5½ feet deep with an undercut stern and rounded bow. There is an opening extending from the bow part of the way toward the stern for the ladder of the dredging buckets. The material is lifted by (1).

1. A bucket dredge with 38 buckets, each holding 3¼ cubic feet and dumping 13 buckets per minute. The buckets have sharp renewable hard nickel steel edges for digging into bed rock and are mounted on a frame, called a ladder, about 70 feet long, which is pivoted at the upper end and suspended at its lower end from a frame at the bow. The ladder extends 16 feet in front of the bow. The buckets are driven from a 4-sided tumbler at the upper end through gearing and belt from the engine and pass around a 5-sided tumbler at the lower end. A friction clutch allows the buckets to slip in case they meet an obstruction. The buckets dump over a delivery plate to (3); any drippings from the buckets are caught on (2).

2. Three sets of grizzlies. The exact details are not known to the author, but they presumably yield oversize to waste and undersize to the tables. (5).

3. From (1). A trommel of plate iron, 4 feet diameter, 24 feet long, with 9.5-mm. round holes, revolving on friction rollers and having an inside perforated spray pipe delivering 2,000 to 3,000 gallons of water per minute. The material is disintegrated as well as screened. Oversize to (4); undersize to distributing boxes and thence to (5).

4. A bucket elevator or "stacker" driven by wire rope at the upper end which delivers the coarse tailings in the rear of the scow and 25 feet above water level.

5. From (2) and (3). Four inclined stationary tables, each about 10 feet long and 11 feet wide. Each table is divided into two or three sections by longitudinal partitions. The tables are made of cast iron to prevent warping and covered with cocoa matting which is overlaid with expanded metal riffles. Nearly all of the gold is caught upon the upper 6 inches of the tables. Periodically the material is shut off from the table and the matting taken off and washed in (7); tailings of tables to (6).

6. A flume with angle iron riffle blocks. Heavy material containing gold, cleaned out periodically, to (8); tailings flow over the stern of the boat to waste.

7. From (5). Washing tank. Settlings to (8).

8. From (6) and (7). The gold which is mixed with black sand and other waste material is separated out, cleaned and sent to market.

The labor required is seven men: 1 dredge master, 1 engineer, 3 winch men (each working an 8-hour shift), 2 firemen (each working a 12-hour shift).

Power was furnished by steam boilers burning about 2½ cords of good wood per 24 hours. A vertical compound marine engine indicating 45 horse power ran the dredging buckets, the trommel, the centrifugal pumps and the stacker. A pair of donkey engines ran a winch with six drums: four for the mooring lines from the four corners of the boat, one for the head line, and one for raising and lowering the ladder. A direct connected high speed engine ran the electric light dynamo. All steam was condensed by a surface condenser placed in the suction of the centrifugal pump. Electricity has since been brought to the dredge and the machinery is now run by electric motors. A 50-horse power induction motor, delivering an average of 25 horse power, runs the dredging buckets. A 20-horse power induction motor runs the trommel and stacker. The two centrifugal pumps each require 15 horse power.

Water is pumped from the pond by two centrifugal pumps. One delivers 2,000 gallons per minute to the trommel and the other supplies the distributing boxes and the grizzlies. As the dredge is in an artificial pond, the seepage has to be taken care of and it is necessary to pump in 250,000 gallons per 24 hours from Feather River through a flume 3,000 feet long.

Material in this district runs from $0.15 to $0.20 per cubic yard. The tailings of the dredge seldom show a trace of gold. The saving made by the dredge is estimated to be very high. During a certain period while $2,500 was cleaned up from the tables (5), only $16 was obtained from the riffles (6). The cost is $0.05 per cubic yard, including depreciation of plant.

During a period of 430 days the dredge was able to work only 275 days, in which time 340,068 cubic yards (bank measurement) were lifted. One cubic yard in the bank swells to 1.615 cubic yards in the bucket.

§ 720. GOLD DREDGING IN GENERAL.—This process is now used in New Zealand, Australia, Siberia, Alaska, British Columbia, and in the states of Colorado, California, Oregon, Idaho and Montana. Many failures have been made through ignorance of the fact that all auriferous ground is not suitable for dredging. Unfavorable ground is that which contains large boulders, stumps of trees and hard and broken bed rock in the cracks of which the gold will accumulate and be removed with difficulty. In rivers the dredge usually works up the stream and a swift current or the occurrence of floods are troublesome. In general in starting it is wise to do some prospecting to ascertain: (1) the quantity and character of the gold by panning or by a test run on material from the surface to bed rock; (2) the room for a dump for tailings; (3) the absence of large stones—over 500 pounds—which the dredge cannot handle; (4) the area and the depth of the material to bed rock; (5) the amount of sediment deposited over the gold bearing gravel in the case of rivers; (6) the fuel supply.

Besides the continuous bucket and the dipper dredges of Mills 51 and 52, other types have been employed at one time or other, such as the clam shell dredge, the orange peel dredge, suction dredges and an Archimedes screw dredge. The clam shell dredge and the orange peel dredge are not favored, since (1) they deliver the material intermittently; (2) they are leaky, allowing the gold to escape; and (3) the dredge must be set on spuds as otherwise it would rock and interfere with the work of the gold saving tables. These spuds do not allow so much elasticity as mooring lines and with them the dredge is not so easily moved. Suction dredges which draw up the material by means of large centrifugal pumps with a 12-inch suction pipe or by some other vacuum-producing device have proved failures in most cases although two are used on the Snake River, Idaho. They cannot deal with hard rock or coarse material and stones are liable to jam in the suction pipe. The power consumed by them is very high, the wear is considerable

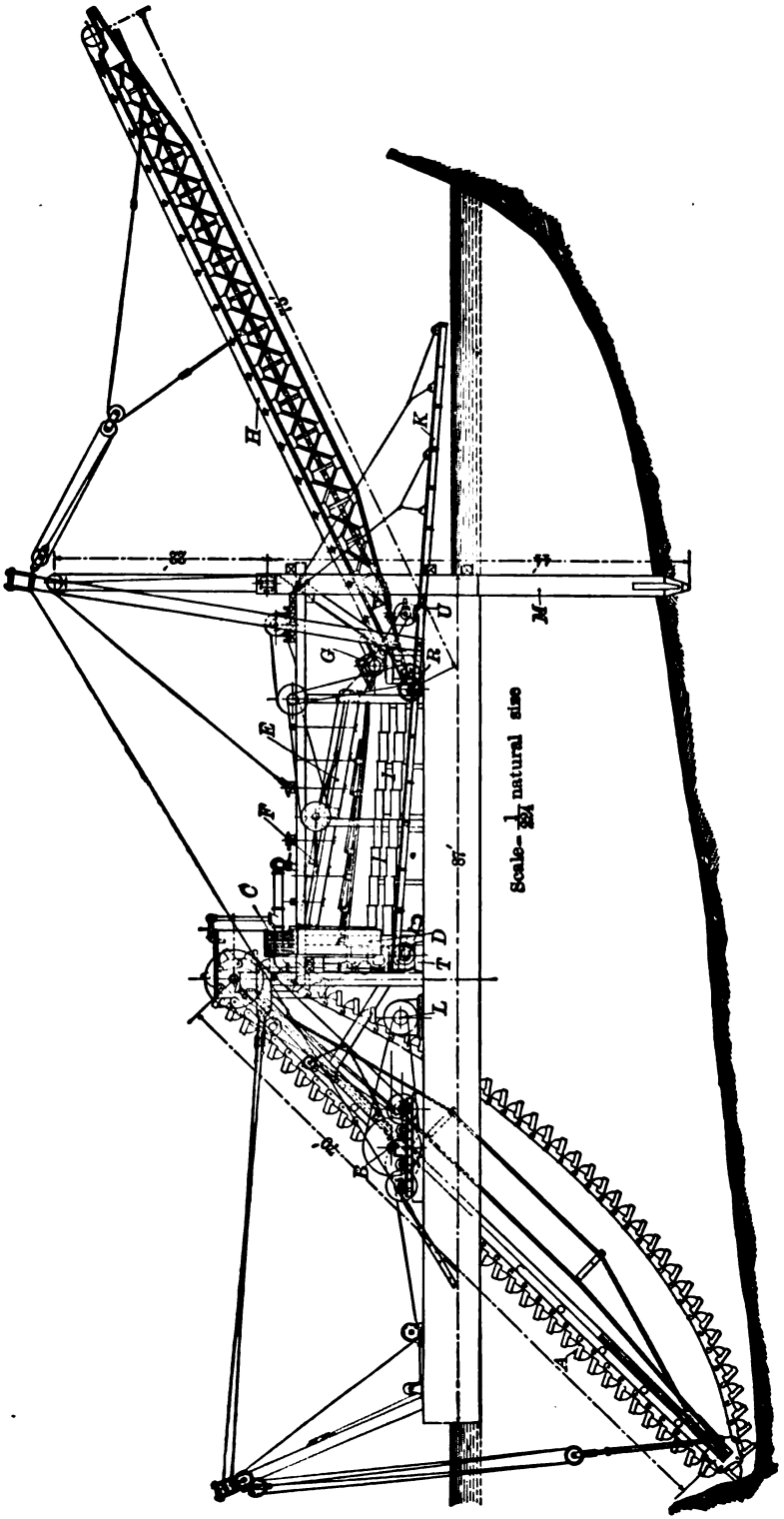

FIG. 521a.—ELEVATION OF A BUCYRUS GOLD DREDGE DRIVEN BY ELECTRIC MOTORS.

and they fail to lift the heavy gold with the lighter sand owing to the decrease of suction a short distance away from the pipe. The only dredge of the Archimedes screw type known to the author was located in California and proved a failure. The dipper dredge (steam shovel type) has the disadvantages that the gold is liable to leak out of the dipper, it delivers the material intermittently, it requires spuds, it disturbs the gravel more and is more costly to run than the bucket dredge. It has an advantage where large boulders are to be handled. The bucket dredge is the favorite dredge to-day. More of them are used than all the others put together and in some cases they have actually replaced dipper dredges. They can handle both coarse and fine material, they do not stir up the gravel, and they deliver the material in a continuous stream. They cannot deal successfully with hard and tough bed rock or with boulders although for the latter on some bucket dredges a few of the buckets are replaced by grabs in the form of hooks. Bucket dredges have been made with buckets of all sizes up to 9½ cubic feet, which occurs on a Knott dredge and which corresponds to a *theoretical* capacity of 6,400 cubic yards in 24 hours. There is a limit to the capacity of a dredge for the reason that a limited area can be allowed for the gold saving tables. To overcome this difficulty the dredged material has sometimes been transferred for treatment to apparatus mounted on a second scow or on the shore, but so many new difficulties are met with that neither of these schemes has been employed to any extent. The Knott dredge also has an arrangement whereby the buckets are kept vertical and come up full, no matter at what depth they are working, and the ladder can swing 180°. On the Urie dredge is an arrangement whereby the buckets may be only partly or wholly filled. The Bucyrus dredge is made in two forms:—the single lift and the double lift. The former is similar to that described in Mill 52 and is shown in Figs. 521*a* and 521*b*, while in the latter the trommel is placed at a lower level and the fine undersize of the trommel is elevated to the gold saving tables by a centrifugal pump. It is claimed that the blades of the pump disintegrate any clay balls that may have previously escaped. It would

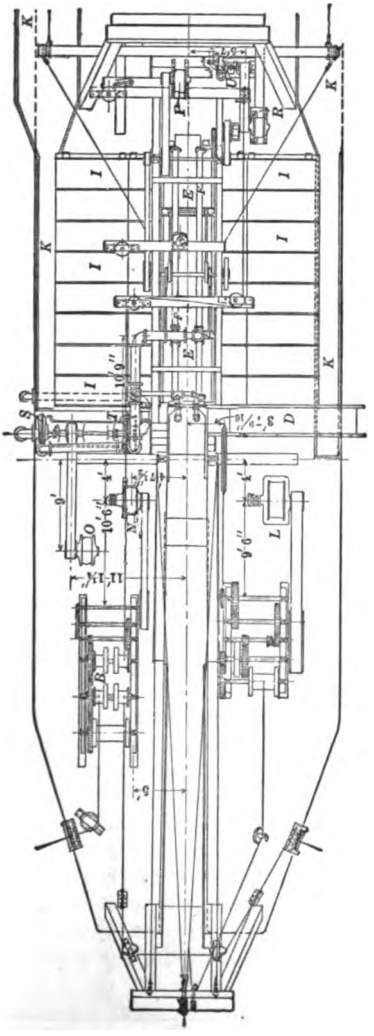

FIG. 521*b*.—PLAN, WITH TAILINGS STACKER NOT SHOWN. SCALE, = 1/64 SIZE.

A. Bucket dredge.
B. Winches.
C. Grizzly.
D. Waste chute for coarse stuff.
E. Shaking screen.
F. Spray pipes.
G. Hopper for oversize of screen.
H. Tailings stacker.
I. Tables.
K. Launders for tailings from tables.
L. 50-horse power motor for bucket dredge
M. Spud.
N. 20-horse power motor for winches.
O. 30-horse power motor for pumps.
P. 20-horse power motor for shaking screen and tailings stacker.
R. 10-horse power motor for pump.
S. 8-inch centrifugal pump.
T. 6-inch centrifugal pump.
U. 4-inch centrifugal pump.

also brighten the gold for amalgamation, if amalgamation were used on dredges. Under favorable conditions dredges can work to a depth of 60 feet below water level, and can stack tailings to a height of 60 feet above water level. When working in high banks a hydraulic nozzle has been used to cut down the bank in advance and thereby prevent the buckets from being buried by a falling bank. On some bucket dredges a stream of water is used to wash out any material adhering to the inside of the buckets and the washings together with any spill from the buckets are pumped up and run over the tables.

The trommels on dredges vary from 16 to 25 feet in length, are made of steel plate ½ inch thick, or sometimes of bars, and the size of the holes varies from $\frac{5}{16}$ inch at the upper end to ⅝ inch at the lower. To help the disintegration, angle irons have been used on the inside of the trommel. On some dredges, two trommels are used. Instead of trommels, fixed grizzlies or shaking screens are found. Grizzlies do not disintegrate the material as well as trommels. Shaking screens have been little used although they have been recently installed at Oroville, California, where they have been claimed to be more efficient, to use less power, and to use less than half as much water as a trommel. Stationary screens of perforated plate are used in some instances for fine screening.

The rear elevator or stacker is a comparatively recent development of the process. When working in rivers it is not necessary to elevate the tailings, and as a rule in other places it is only the coarse tailings that are lifted, although occasionally in large deposits the fine stuff is taken as well as the coarse. The buckets are perforated to allow the water to drain out, as otherwise it would be dumped on the top of the pile and would wash down the tailings. Other devices are: (1) to elevate the tailings to an elevated launder and let them flow off by gravity; (2) to use belt conveyors with little cleats on them which are cheaper and wear less than bucket elevators; (3) to pump them up through a tailings pipe, which is expensive in power and wear.

Stationary inclined tables covered with cocoa matting overlaid with expanded metal or wire netting are the form of gold saving appliance in common use today, but many other forms have been and still are employed. Among them are vanners, riffles, and amalgamated plates. A dipper dredge connected with a vanner plant on the shore proved a failure in one case in California, while in another case it did not. Riffles (not including the riffles of expanded metal on the tables) are more or less used in the sluices (see § 510). They are satisfactory for catching the coarser gold, but for the finer particles they do not seem to be as efficient as tables. Riffles with mercury in them are not favored. With amalgamated plates the coarse material passing over them is liable to scour them too much. Another obstacle to the use of mercury in gold dredging is that the gold is generally rusty, that is, coated with some foreign substance so that it cannot be amalgamated without first being brightened. An exception to the use of mercury is at Oroville, California, where they now use tables with riffles containing mercury on them, and with frequent steps or drops in the table. With this arrangement they claim to save 12 or 13% more gold which formerly went to waste owing to its fineness. Among the different kinds of tables found on different dredges are the following:—burlap, burlap followed by canvas, burlap over amalgamated plates, burlap over cotton cloth which is used to catch any gold that sifts through the coarse burlap, cocoa matting over cotton cloth, baize, plush, blankets, Brussels carpet, Canton flannel, and rough boards. All of the preceding may have expanded metal over them. When coarse stuff passes over the tables they are quite often overlaid a short distance above their surface by a perforated plate which arrangement saves wear of the tables and gives the gold a better chance to be caught. As a rule the tables slope about 1½ inches per foot

or 7° 7′. They are 16 to 18 feet long and the sections are 3 or 4 feet wide. The matting or burlap is in lengths of 3 or 4 feet to be easily removed for cleaning. Tables are preferred to narrow sluices and it is better to have short tables of good width rather than long tables of narrow width.

The cleaning of the tables should be made often enough to prevent loss of gold over the tail. The prevailing opinion is that when the surface of the table has been filled with black sand from head to tail then some of the gold will be unable to displace the black sand and will slip by to waste.

In working up the concentrates from the tables they may be worked up with mercury in a clean up pan or some similar device with or without the use of chemicals. or the gold may be extracted from them by further concentration as indicated at the end of § 505. The latter method is the usual one. A method used on a dredge in Montana is to treat the concentrates in a kieve and then pan the "bottoms" or heads of the kieve.

In addition to the use of steam and electricity for power as described in Mill 52, there are a few instances of the use of water power in the shape of Pelton wheels mounted on the dredge and having the water brought to them under a sufficient head through a flexible pipe. Formerly the so-called current wheel dredges were found in New Zealand. They were driven by the current of the river by means of large paddle wheels on the side of the dredge. These had a small first cost and small labor and power cost, but they had small capacity and could not run except where the current was strong. When two or three dredges are working near one another the use of electricity generated at a central station is more economical than steam plants on each dredge and smaller boats can be used.

The water required on a dredge is 2,000 gallons more or less per cubic yard dredged. Where a dredge is working in an artificial pond a supply of fresh water is necessary in order to prevent the water from becoming too muddy. On steam dredges, drawing the water through a condenser serves the double purpose of condensing the steam and warming the water in cold weather.

The cost of dredging is very variable, depending upon the conditions. Under favorable circumstances the work can be done for $0.04 to $0.12 per cubic yard. As low as $0.03 is reported. The average daily expenses of a bucket dredge should not be over $55 to $60 per day for a capacity of 1,000 to 1,500 cubic yards per 24 hours. On Snake River, Idaho, a centrifugal pump suction dredge cost $100 per day, a bucket dredge cost $75. In Montana the bucket dredge "A. E. Graeter," run by steam, cost $0.09 per cubic yard. while the bucket dredge "F. L. Graves," run by electricity, cost $0.045. On the Yuba River, California, the cost is $0.03 to $0.05 per cubic yard. In New Zealand five dredges ranged from $0.032 to $0.155 with an average of $0.065. If many difficulties are met the cost will be considerably above the previous figures. The cost of a steam dredge in position will vary from $15,000 to $60,000 or even more depending upon its location. The Pomeroy dredge in Eastern Oregon cost $60,000, handles 2,000 cubic yards in 24 hours, requires 10 men, and costs $0.05 per cubic yard.

GOLD MILLS WITH GRAVITY STAMPS WITH OR WITHOUT AMALGAMATED PLATES AND VANNERS.

§ 721. Groups (*m*) to (*r*) inclusive include mills for extracting gold from mine quartz or rich gravel, the essential feature of which is gravity stamps, to which may be added amalgamated plates and vanners and many other devices. Instead of gravity stamps other forms of fine crushing machinery such as Huntington mills, ball mills, Chili mills, Tustin mills, etc., are occasionally used.

After stamping, the gold may be in any of the following conditions:—

free and bright in compact forms;

free and bright in finely abraded slimes;
rusty in compact or flattish forms;
included in pyritic minerals, compact or flattish;
combined with tellurium, compact or flattish;
included in grains of quartz;
in fine pyritic and telluride slimes.

The compact bright gold and the finely abraded slime gold are easily caught on amalgamated plates; the latter is probably better caught if the plates give the pulp successive drops. The compact grains of rusty gold, of gold included in pyritic mineral and of telluride of gold are easily caught by a vanner. The flattish grains of rusty gold and telluride and the included grains may be difficult to catch. To save them requires the putting of too much quartz in the heads and the consequent drop in assay; if too much goes into the tailings the tailings go up in assay. The fine slimes of pyritic mineral and telluride and, if no amalgamated plates are used, the finely abraded gold go into the tailings of the vanner to a considerable extent. Tellurides of gold are difficult to save in this way because they are very brittle and slime badly, they do not amalgamate, and they are more or less volatilized in subsequent roasting operations. In case they are present in any considerable quantity it is advisable to use some non-sliming crushing apparatus, then to concentrate and ship the concentrates to a smelter. The Tustin mill at Murphys, California, did this successfully.

In all the gold mills with gravity stamps, graded crushing is absent, since the object of using stamps is to pulverize the ore. For this reason the use of grizzlies probably does not lessen the quantity of slimes produced but merely serves to increase the capacity of the breakers and lessen their wear. Similarly the use of a fine Dodge breaker between the automatic feeder and the stamps[288] has the effect of only increasing the capacity of the stamps.

(*m*) GOLD MILLS WITH GRAVITY STAMPS AND VANNERS BUT WITH NO AMALGAMATED PLATES.

§ 722. This group includes Mills 53, 54 and 55. The ores are dressed by breakers, California stamps stamping coarse, and vanners. The compact grains of gold or mineralized metal are all easily saved by the vanners. The flattish and included grains are partly saved in the vanner heads and partly lost in the tailings. The finely slimed mineralized and free metal are saved only so far as the vanner can save them, unless a canvas plant is used as noted under Mill 55.

Amalgamated plates are not used in these mills because the amount saved by them would be too small. Mill 53 would save 30% of the gold as free gold by mercury, but this gold is caught by the concentration and the final saving is the same, and one process is used instead of two. Since it is cheaper to recover gold by amalgamation than it is by concentration followed by chlorinating or smelting of the concentrates, it will be a question for the ledger to decide whether to use amalgamation and concentration combined or concentration alone. In the latter case, some other form of crushing apparatus, such as a Tustin mill, which does not make as many fines as stamps, would be preferred.

§ 723. MILL NO. 53. HECTOR MINING COMPANY, TELLURIDE, COLORADO.—Capacity 90 tons per 24 hours. The mill runs 24 hours per day, probably 7 days per week. The ore consists of the economic minerals pyrite, a little chalcopyrite and tetrahedrite, and a very little galena and free gold, and a gangue of white and blue quartz. The problem is to save the gold, silver, and lead. The ore is brought in cars holding 2,700 pounds to (1).

1. Three No. 1 or receiving bins with 45° bottom, each holding 100 tons. By three gates and chutes to (2).
2. Three No. 1 Dodge breakers, 1¼ × 6 inches, crushing to ¾ inch. To (3).
3. Three No. 2 bins, each holding 50 tons. By six Hendy feeders to (4).
4. Thirty gravity stamps arranged in six batteries, using a screen with 0.70-mm. square holes. Pulp to (5); at weekly clean up, scrap iron to waste and coarse rock returned to mortar.
5. Ten 4-foot Frue vanners and two 7-belt Woodbury vanners. Heads shipped to smelter; tailings to waste.

The labor required is 10 men per 24 hours divided into two shifts of 12 hours each: 4 breaker men, 2 stamp men, 2 vanner men, and 2 others. Wages range from $3 to $4.50 per day. Board costs $30 per month, coal $10 per ton and wood $5 per cord.

Power for six months in summer is derived from water power running Pelton wheels under a head of 425 feet. A 3-foot wheel runs the breaker and stamps and a smaller wheel runs the vanners. In winter the power is furnished by two 60-horse power fire tube boilers and one 100-horse power engine. The horse power used is: breakers, 15; stamps and feeders, 35; vanners, 10; total, 60.

Water is derived from Marshall Creek by a pipe 12 inches diameter and 1,200 feet long. The stamps use 34,560 gallons in 24 hours and the vanners 17,280 gallons.

The ore runs $5 to $10 per ton. The concentrates contain 5 to 10 ounces gold per ton, 30 to 35 ounces silver, and 5 to 12% lead. The tailings contain a trace of gold and 0.75 to 1.00 ounce silver per ton. One hundred tons of ore yield 5 tons of concentrates and 95 tons of tailings. The mill saves 90 to 95% of the gold and 65% of the silver.

§ 724. Mill No. 54. Hornsilver Mining Company, Frisco, Utah.—Capacity 100 tons in 24 hours. The mill runs 24 hours per day, probably 7 days per week. The ore consists of the economic minerals native silver, argentite, cerargyrite, and cerrusite, and a gangue of quartz, calcite and siderite. The problem is to save the lead, silver, and gold. The ore is sorted into smelting ore which goes to the smelter, and concentrating ore to (1).

1. A gravel screen with 1½-inch square holes. Oversize to (2); undersize to (3).
2. One No. 1 breaker, a Comet D, crushing to 2 inches. To (3).
3. From (1) and (2). Mill bin. By six chutes and six Hendy feeders to (4).
4. Thirty gravity stamps arranged in six batteries, using a 24-mesh wire screen. Pulp to (5).
5. Six 6-foot Frue vanners. Heads to (7); tailings to (6).
6. Twelve 6-foot Frue vanners. Heads to (7); tailings to waste pond.
7. From (5) and (6). The concentrates are sold to the silver-lead smelters to the highest bidder.

Water is pumped back from the waste pond to the mill.

Analyses are as follows:

	Silver. Ounces per Ton.	Gold. Ounces per Ton.	Lead. %	Copper. %
Smelting ore from the mine	30	.....	40	.....
Concentrating ore from the mine	10	0.05	15	2
Concentrates	40 to 60	0.15 to 0.25	50 to 70	.....
Tailings	1.5	Trace.	2	Trace.

One hundred tons of ore mined yield 20 to 40 tons of smelting ore, and 60 to 80 tons of concentrating ore. Eighty tons of concentrating ore yield about 15 tons of concentrates and 65 tons of tailings.

The reader will notice the arrangement of the vanners in series with six in the first set and twelve in the second, instead of eighteen in parallel as would be the usual arrangement. At this mill the loss in silver is mainly due to cerargyrite (hornsilver) which is difficult to save owing to its scaly form, and which slips away in the tailings. This mineral has the name of being difficult to concentrate but at Tombstone, Arizona,[71] a plant is reported to have worked very successfully on tailings from pan amalgamation which contained hornsilver down to the fineness of slimes. The plant had a capacity of 150 to 170 tons in 24 hours and consisted of two 1.2-mm. trommels and a box classifier, the products of which were at first treated on two jigs and six convex revolving slime tables; later the coarsest slime tables were replaced by Frue vanners.

§ 725. MILL NO. 55. PANDORA MILL OF THE SMUGGLER-UNION MINING COMPANY, TELLURIDE, COLORADO.—Capacity 130* tons in 24 hours. The mill runs 24 hours per day, 7 days per week. The ore consists of the economic minerals pyrite, chalcopyrite, galena, sphalerite, several arsenical silver minerals and occasionally native gold and silver, all finely disseminated, and a gangue of quartz with a little rhodocrosite, calcite and barite. The ore is hauled in cars, holding 1 ton, to the rock house where rich smelting ore is picked out on chutes and aprons, and the residue goes by a Bleichert wire tramway, with buckets holding 500 pounds, 1 mile to (1).

1. No. 1 or receiving bin holding 25 tons. By shovel to (2).
2. One No. 1 Blake breaker, 10 × 15 inches, crushing to 1½ inches. To (3).
3. No. 2 or stamp bin, holding 200 tons. By 10 gates and chutes and 10 Hendy feeders to (4).
4. Fifty gravity stamps, arranged in ten batteries, using screens with 1.10-mm. square holes. Pulp to (5); at monthly clean up, scrap iron to waste, coarse ore returned to mortar.
5. No. 1 vanners. Sixteen 4-foot Frue vanners and fourteen 4-foot Triumph vanners. Heads to smelter; tailings to (6).
6. A screen with 40-mesh holes. Oversize to (7); undersize to waste.
7. A Huntington mill with probably a 40-mesh screen. To (8).
8. No. 2 vanners. Heads to smelter; tailings to waste.

The labor required is 23 men per 24 hours divided into two shifts of 12 hours each: 2 engineers, 2 firemen, 2 breakermen, 2 stamp men, 4 vanner men and 11 others. Wages vary from $3.50 to $4.50 per day. Board costs $30 per month.

Power is furnished by two fire tube boilers 16 feet long, 4½ feet diameter, with 44 tubes 3½ inches diameter, running under a steam pressure of 90 pounds per square inch, and an engine with cylinder 18 × 36 inches, making 78 revolutions per minute, cutting off at ¾ stroke and indicating 150 horse power.

The water required for the stamps is 132 gallons per minute. The ore stamped contains about 0.5 ounce gold and 13 ounces silver per ton; the concentrates contain 2 to 3 ounces gold and 50 ounces silver; the tailings contain 0.14 ounce gold and 5 ounces silver per ton. About 10 or 15% of the ore mined is picked out in the rock house as rich smelting ore. One hundred tons of ore stamped yield about 20 tons of concentrates and 80 tons of tailings. The mill saves about 80% of the gold and about 60% of the silver.

An analysis of the ore showed: SiO_2 (silica), 70.42%; FeS_2 (pyrite), 5.57%; Fe_2O_3, 3.64%; $MnCO_3$, 1.69%; Al_2O_3, 9.94%; $CaCO_3$ (calcite), 3.54%; $MgCO_3$, 0.98%; ZnS (blende), 1.52%; PbS (galena), 0.76%; $Cu_2SFe_2S_3$ (chalcopyrite), 0.17%. An analysis of the concentrates showed: SiO_2, 39.92%; FeS_2, 26.89%; Fe_2O_3, 4.50%; $MnCO_3$, 3.51%; Al_2O_3, 6.20%; $CaCO_3$, 4.48%; $MgCO_3$, 2.27%; ZnS, 5.94%; PbS, 3.76%; $Cu_2SFe_2S_3$, 0.51%.

The reason given for pulverizing this ore by stamps is that the mineral is

* Since increased to 200.

finely disseminated in the gangue and that in order to liberate it, stamps are necessary even though they are productive of considerable loss through sliming. This loss is bound to occur with stamps although they use a coarser screen than is usual.

Recent changes in this mill are to use a 10-mesh screen in the stamps instead of a 14-mesh (1.10 mm.) and thereby to increase the capacity to 200 tons in 24 hours. The pulp from the stamps goes to a 20-mesh trommel. The oversize of the trommel is crushed by rolls and then joins the undersize which is treated on vanners. A Gates canvas plant similar to Mill 78, containing 7,000 square feet of canvas, has also been installed to treat the tailings of the mill. About 75 to 80% of the coarse material goes to cyanide treatment from the hydraulic classifier spigot and the remainder goes to the canvas tables. Before it was in final running order it was saving $2,000 per month of value which formerly went to waste. The concentrates of the canvas plant contain 1 ounce gold and 60 ounces silver per ton and 7% lead.

(*n*) GOLD MILLS WITH GRAVITY STAMPS AND AMALGAMATED PLATES BUT NO VANNERS.

§ 726. In Mill 56, which is the only mill in this group, the gold is coarse gravel gold, and hence the very coarse screen and high speed of stamping. The compact nuggets, thin forms and finely slimed gold are nearly all caught on short amalgamated plates or in riffles containing mercury. The rusty gold and black sand are mostly caught in riffles; the black sand is subsequently cleaned up with a hand pan.

§ 727. MILL NO. 56. FRANKLIN MINING COMPANY, PLACERVILLE, CALIFORNIA.—Capacity 60 tons per 24 hours. The mill runs 24 hours per day, 7 days per week. This is a cement gravel mine in which the ore consists of the economic mineral native gold and a gangue of loosely cemented conglomerate lying on bed rock and containing some black sand. The problem is to save the gold. The ore is brought in cars, each holding 1,600 pounds, and dumped into (1).

1. Receiving bin holding 300 tons. By gates and chutes and two Hendy feeders to (2).

2. Ten gravity stamps arranged in two batteries, using screens with 1.60-mm. square holes and having mercury fed to the mortar. Pulp to (3); at weekly clean up, scrap iron to waste, coarse ore returned to (2), amalgam to (9), and black sand to (10).

3. Four sets of amalgamated plates and riffles, one in front and one behind each battery. Each consists of the following in sequence: A splash plate, a lip plate, an apron plate and five cross riffles containing mercury. Amalgam from plates and riffles removed every 7 days to (9); pulp to (4).

4. Two collecting sluice boxes, one in front and one behind the batteries. Each contains round hole riffles with four cross riffles at the end. Black sand and amalgam are cleaned out monthly and separated by hand pans, the former going to (10) and the latter to (9); pulp to (5).

5. One main sluice with longitudinal riffles. Black sand cleaned out monthly to (10); pulp to (6).

6. One undercurrent with 15-mesh holes. Oversize and some of the water to (7); undersize and most of the water to (8).

7. One sluice with Hungarian riffles. Black sand cleaned out monthly to (10); pulp to waste.

8. From (6). Three fixed inclined tables covered with old stamp screens. Black sand cleaned off monthly to (10); pulp to waste.

9. From (2), (3), (4), (10). The amalgam is squeezed and then contains

about 50% gold. It is retorted and the retort residue shipped to market without melting. The mercury is used over in the mill.

10. From (2), (4), (5), (7), (8). An amalgamating barrel making 30 revolutions per minute, in which the black sand is ground by hard round stones with mercury and a little sulphuric acid. Amalgam to (9); tailings stored for further treatment.

The labor required for the mine and mill is 20 men per 24 hours. Wages vary from $2.50 per day for laborers to $3 for mechanics. Board costs $5 per week and wood is $3 per cord.

Power is furnished by a Pelton wheel, 6 feet diameter, with ⅞-inch nozzle, using 15 miner's inches of water (about 180 gallons per minute) under a head of 180 feet and rated at 9 horse power.

The water for the mill is part of the waste from the Pelton wheel and the amount fed to the ten stamps is 67 gallons per minute. Water costs $0.30 per miner's inch per 24 hours.

The ore contains 0.12 to 0.40 ounce gold per ton. The black sand assays 1 to 2.5 ounces gold per ton. The gold is 935 to 956 fine. One hundred tons of ore yield a little over 1 ton of black sand and 99 tons of tailings. The mill saves by amalgamation from 0.12 to 0.25 ounce gold or even more from each ton of ore. The loss of mercury is very small.

(*o*) GOLD MILLS WITH GRAVITY STAMPS, AMALGAMATED PLATES AND VANNERS.

§ 728. This group includes Mills 57 to 70 inclusive. They treat ores containing free gold with auriferous pyritic minerals. The compact grains of gold and most of the finely slimed gold are caught on amalgamated plates. The compact pyrite and rusty gold are caught in the heads of the vanner. The flattish and included grains are partly caught in the heads and partly lost in the tailings of the vanner. The finely slimed pyritic mineral is caught only so far as the vanner is able to catch it.

§ 729. MILL NO. 57. NORTH STAR MINING COMPANY, GRASS VALLEY, CALIFORNIA.—Capacity 64 tons per 24 hours. The mill runs 24 hours per day, 6 days per week. The ore consists of the economic minerals free gold and auriferous pyrites, and a gangue of quartz. The quartz vein is in a country rock of diabase. The problem is to save the gold. The ore is hand picked in the mine into clean waste and milling ore. Both classes are hoisted separately in cars holding 1,400 pounds, the former going to the dump and the latter being trammed over a trestle to (1).

1. Eight grizzlies with 2-inch spaces. Oversize to (2); undersize to (4).
2. Eight No. 1 bins with bottoms sloping 43°. By gates to (3).
3. Three No. 1 Blake breakers, 9 × 15 inches, crushing to 1½ inches. To (4).
4. From (1) and (3). Eight No. 2 bins with bottoms sloping 43° and each holding 30 tons. By eight gates and chutes and eight Hendy feeders to (5).
5. From (4) and (10). Forty gravity stamps arranged in eight batteries, using screens with 0.79-mm. round holes and having mercury fed to the mortar. Pulp to (6); at fortnightly clean up, amalgam to (10) and battery residue to (8).
6. Eight sets of amalgamated plates and mercury traps. Two sets have the following sequence: A lip plate, No. 1 mercury trap, apron plate, sluice plate, No. 2 mercury trap, No. 3 mercury trap. Six sets have the following sequence: A lip plate, No. 1 mercury trap, apron plate, first sluice plate, second sluice plate, No. 2 mercury trap. Pulp to (7); at daily clean up, amalgam from plates to (10); and less often amalgam from traps to (10) and heavy sand to (8).

7. Twelve four-foot Triumph vanners and four-foot Frue vanners. Heads to chlorination works; tailings to waste.

8. From (5) and (6). Clean up barrel, run only at time of fortnightly clean up. Pulp hosed out to (9).

9. Mechanical batea. Heads consisting of amalgam and coarse material to (10); tailings, settled in a settling tank and thence to chlorination works.

10. From (5), (6), (9). Clean up room containing a clean up pan, three panning sinks, hand pans, etc. The products are scrap iron to waste; coarse ore to (5); concentrates to chlorination works; amalgam which is squeezed, retorted and melted to go to market; quicksilver used over in the mill.

The labor required is 5 men per 24 hours. Wood costs $4 per cord.

The power is furnished by three Pelton wheels running under a head of 275 feet. One wheel 3 feet diameter, with $\frac{15}{16}$-inch nozzle, making 372 revolutions per minute, drives the rock breakers; one wheel 6 feet diameter, with $1\frac{13}{16}$-inch nozzle, making 190 revolutions, drives the stamps; one wheel 2 feet diameter, with $\frac{3}{4}$-inch nozzle, making 390 revolutions per minute, drives the vanners. The wheels use 110 miner's inches of water (about 1,276 gallons per minute).

In addition to the water used by the Pelton wheels, the stamps and vanners require 10 miner's inches (about 116 gallons per minute).

The ore contains from 0.4 or 0.5 to 1.5 ounces gold per ton, average about 0.9 ounce. The gold is 856 fine. The concentrates assay from 2.5 to 3.0 ounces gold per ton and the tailings about 0.025 ounce per ton. One hundred tons of ore yield $1\frac{3}{4}$ to 4 tons of concentrates and 96 to $98\frac{1}{4}$ tons of tailings. The mill saves 85 to 91% of the gold by amalgamation, 6 to 12% in the concentrates and the remaining 3% is lost in the tailings. Of the gold saved by amalgamation, 66% is caught in the mortar, 23% on the lip and apron plates, 8% on the sluice plate and 3% on the lower plates.

§ 730. MILL NO. 58. MARYLAND MINING COMPANY, GRASS VALLEY, CALIFORNIA.—Capacity 80 tons per 24 hours. The mill runs 24 hours per day, 7 days per week. The ore consists of the economic minerals free gold and auriferous pyrites and a gangue of hard quartz and slate. The vein is $2\frac{1}{2}$ feet wide and is between a hanging wall of diorite and a foot wall of slate. The problem is to save the gold. The ore is hoisted up an incline in a car holding 1,000 pounds and dumped upon (1).

1. Receiving bin with bottom sloping 45° and holding 500 tons, roughly divided into two parts. By eight gates and chutes and eight Hendy feeders to (2).

2. Forty gravity stamps arranged in eight batteries, using screen with 0.54 and 0.59-mm. square holes. Pulp to (3); at fortnightly clean up, fine battery residue to (7), coarse returned to mortar.

3. Eight sets of amalgamated plates and mercury traps, each arranged in the following sequence: First apron plate, No. 1 mercury trap, second apron plate, No. 2 mercury trap, sluice plate, No. 3 mercury traps. Pulp to (4); at daily clean up, amalgam from plates to (8); less often, amalgam from traps to (8), and heavy sand to (7).

4. Ten 4-foot Frue vanners and six 5-foot Triumph vanners, all with amalgamated plates on their distributors. Amalgam cleaned off periodically to (8); heads to (9); overflow of heads tank to (5); tailings to waste.

5. Forty-eight No. 1 settling tanks arranged in 16 sets with three in series in each set. Settlings to (9); overflow to (6).

6. One No. 2 settling tank. Settlings to (9); overflow to waste.

7. From (2) and (3). A clean up pan run only at fortnightly clean up. Pulp is worked up by hand pans in (8).

8. From (3), (4), (7). Clean up room containing the clean up pan, hand pans, panning sink, straining cloths, etc. The products are scrap iron to waste; concentrates to (9); amalgam retorted, melted and shipped to market; quicksilver used again in the mill.

9. From (4), (5), (6), (8). Smelting works. The smelting charges being $16 per ton make this preferable to chlorination, which costs $18 to $20 per ton.

The labor required is four men per 24 hours. Wages vary from $2.50 per day for laborers to $3 for mechanics. Board costs $5 per week.

Power is furnished by a Pelton wheel 5 feet in diameter.

§ 731. MILL No. 59. THE EMPIRE MILL, GRASS VALLEY, CALIFORNIA.—Capacity 60 tons in 24 hours. The mill runs 24 hours per day, 6 days per week. The ore consists of the economic minerals native gold and auriferous pyrites and a gangue of hard quartz and slate. The vein is 1 foot thick in a country rock of diabase. The problem is to save the gold. The ore is hoisted in cars holding 1,333 pounds to (1).

1. Twelve No. 1 or receiving bins, supplied with ore each from its own level, stope or shaft, and from any one of which ore can be supplied to any battery. Ore wheeled to (2).

2. Four grizzlies with 3-inch spaces. Oversize to (3); undersize to (4).

3. Two Blake breakers, 9 × 14 inches, crushing to 2 inches. To (4).

4. From (2) and (3). One No. 2 or mill bin with four sections, two for each breaker. The sections are 26 and 34 feet long, 16 feet wide and 12 feet deep, with the bottom sloping 40°. By gates and chutes and eight Hendy feeders to (5).

5. Forty gravity stamps arranged in five batteries, using screens with 0.635-mm. round holes, and having mercury fed to the mortar. Pulp to (6); at fortnightly clean up, amalgam and battery residue to (8).

6. Eight sets of amalgamated plates and mercury traps, each arranged in the following sequence: First apron plate, No. 1 mercury trap, second apron plate, sluice plate, No. 2 mercury trap. Pulp to (7); at fortnightly clean up, amalgam from plates to (8); amalgam and heavy sand from traps to (8).

7. Sixteen 4-foot Triumph vanners. Heads to chlorination works; tailings to waste.

8. From (5) and (6). Cleaning up apparatus, consisting of small grinding pan, hand pans, amalgamated plates, settling tank, retort, etc. The products are coarse ore back to (5), amalgam to retort and the gold to market, fine concentrates to chlorination works, coarse concentrates saved to be reground in the pan, mercury to be used over again in the mill.

The labor required is 7 men per 24 hours. Wages vary from $1.50 or $2.50 per day for laborers to $3 or $3.50 for mechanics.

Power is furnished by Pelton water wheels running under a head of 450 feet. One wheel 6 feet diameter, using a 1⅜-inch nozzle, making 220 revolutions per minute and developing 80 horse power, runs the breakers and stamps. One wheel 2 feet diameter, with a ⅝-inch nozzle not fully opened, making 440 revolutions and developing 7 horse power, runs the vanners.

Water is brought in through a main pipe 22 inches diameter, with branches 13 inches and 4 inches diameter. The power uses 87 miner's inches (about 972 gallons per minute), and the stamps and vanners use 15 miner's inches (about 168 gallons per minute). Water costs $0.18 per miner's inch per 24 hours.

The ore contains 0.25 to 1.5 ounces gold per ton. The gold is 805 fine. The concentrates contain from 4 to 12 ounces gold per ton. The tailings run from 0.038 to 0.05 ounce per ton. One hundred tons of ore yield 2¼ tons of concentrates and 97¾ tons of tailings. On high grade ore the mill saves about 75% by amalgamation and 20% in the concentrates and about 5% is lost in the tailings. On low grade ore the corresponding figures are 50, 35, and 15% respectively.

Of the gold saved by amalgamation, ⅞ comes from the mortar and ⅛ from the plates. The loss of mercury is 0.45 ounce per ton of ore.

Since this mill was visited by the author, a canvas plant has been added for treating the tailings and it saves about 4% of the value of the original ore which formerly went to waste.

§ 732. MILL NO. 60. THE W. Y. O. D. MILL (WORK YOUR OWN DIGGINGS), GRASS VALLEY, CALIFORNIA.—Capacity 34 tons in 24 hours. The mill runs 24 hours per day, 7 days per week. The ore consists of the economic minerals native gold and auriferous pyrites and a gangue of hard quartz and slate. The problem is to save the gold. The ore is brought in cars to a No. 1 or receiving bin from which it is delivered to a No. 3 Gates breaker, crushing to 2 inches. The crushed ore falls to the No. 2 or mill bin and is thence fed by four gates and chutes and four Hendy feeders to twenty gravity stamps arranged in four batteries. These have mercury fed to the mortar and use screens with 40-mesh round holes. The mortars are cleaned out fortnightly and yield amalgam, which is retorted, and the gold sent to market, scrap iron to waste, coarse ore and sand returned to the mortar, and mercury used over in the mill. The pulp from the mortar passes to four parallel sets of amalgamated plates and mercury traps. Each set consists of an apron plate followed by No. 1 mercury trap. These are cleaned fortnightly, and the material obtained is worked up by a muller mortar and clean up pan into amalgam, which is retorted and the gold sent to market, pyrites to chlorination works and mercury to be used over. The pulp from the mercury traps flows to four 4-foot Frue vanners, which yield heads to chlorination works, and tailings to waste. Two 6-foot Woodbury vanners, each with 7 belts, have since been installed.

Power is derived from Pelton water wheels. One hundred tons of ore yield 2½ tons of concentrates and 97½ tons of tailings. The concentrates contain about 5 ounces gold per ton and the tailings 0.075 to 0.10 ounce per ton. The loss of mercury is 0.55 ounce per ton of ore.

§ 733. MILL NO. 61. TAYLOR MINE OF THE IDLEWILD GOLD MINING COMPANY, GREENWOOD, CALIFORNIA.—Capacity 115 to 128 tons per 24 hours. The mill runs 24 hours per day, 7 days per week. The ore consists of the economic minerals native gold and auriferous pyrites, and a gangue of quartz in thin stringers with black slate. The vein lies between greenstone and slate. The problem is to save the gold. The ore is brought from the mine in skips holding 2,000 pounds and dumped upon (1).

1. A grizzly with ½-inch spaces on the first half and 1¾-inch spaces on the last half. Oversize to (2); undersize to (3).

2. One No. 1 breaker, a Gates No. 3, crushing to 1 inch. To (3).

3. From (1) and (2). A rubber belt conveyor mounted on a frame which can be moved so as to deliver the ore to any part of (4).

4. A bin with flat bottom, holding 500 tons. By gates and chutes and eight Hendy feeders to (5).

5. Forty gravity stamps arranged in eight batteries, using screens with 0.81-mm. round holes and having mercury fed to the mortar. Pulp to (6); at monthly clean up, battery residue to (8).

6. Eight sets of amalgamated plates, each arranged in the following sequence: Plate on splash board, apron plate, sluice plate. Pulp to (7); at daily clean up, amalgam to retort yielding gold, which is melted and sent to market, and mercury to be used again. The slag from the melting is run through the stamp mill for any gold it contains.

7. Four 7-belt Woodbury vanners and four 13-belt Woodbury vanners. Heads are stored for further treatment; tailings to waste.

8. From (5). The battery residue is ground in a clean up barrel for 12 hours

and then runs over a gently sloping inclined plane, 30 inches wide, and over a riffled sluice box 10 feet long into a tank. Most of the amalgam is caught on the upper plane and the riffles catch nearly all the remainder. The stuff which settles in the tank is run over one of the sluice plates (6) to catch the last of the value. The amalgam is retorted.

The labor required is 6 men per 24 hours, divided into two shifts: One foreman and day amalgamator, 1 breaker man, 1 night amalgamator, 2 vanner men, 1 roustabout. Wages vary from $2.00 or $2.50 per day for laborers to $3.00 or $3.50 for mechanics. Board costs $0.75 per day.

Power is derived from water wheels. One Dodd disc wheel 36 inches diameter, with ⅝-inch round nozzle, making 750 revolutions per minute, rated at 30 horse power, and using 19 miner's inches of water under a head of 390 feet, drives the Gates breaker. One Pelton wheel, 45 inches diameter, with 1.76-inch round nozzle, making 370 revolutions per minute, rated at 60 horse power and using 70 miner's inches under the same head, drives the rest of the mill.

The water required for power is 89 miner's inches, or about 1,000 gallons per minute; for the stamps 144 gallons; and for the vanners 166 gallons; total, about 1,310 gallons.

The ore assays 0.20 to 0.27 ounce gold per ton and contains 85% quartz, 13% slate and 1¾ to 2% iron pyrite; the concentrates assay 0.80 to 0.90 ounce gold per ton; the tailings 0.02 to 0.04 ounce; average 0.027 ounce. One hundred tons of ore yield 1¾ tons of concentrates and 98¼ tons of tailings. The mill saves about 85% of the gold by amalgamation and 5% by concentration and loses about 10% in the tailings. Fifty per cent of the bullion comes from the amalgamated plates. The gold is 808 fine. The loss of mercury is 0.08 ounce per ton of ore. The mill makes 50 to 60 tons of concentrates per month.

§ 734. MILL 62. GRAND VICTORY MINING COMPANY, PLACERVILLE, CALIFORNIA.—Capacity 100 to 150 tons per 24 hours. The mill runs 24 hours per day, 7 days per week. The ore consists of the economic minerals native gold and auriferous pyrites and a gangue of quartz stringers in a hard black trap-like rock. The problem is to save the gold. The ore is hauled out through the mine tunnel in cars holding 2,000 pounds each and dumped upon (1).

1. Four grizzlies arranged in two pairs, each pair placed like a gable roof, with 2⅜-inch spaces on three of them and 1½-inch on the fourth. Oversize to (2); undersize to (3).

2. Three No. 1 Blake breakers, 8 × 12 inches, crushing to 1½ inches. To (3).

3. From (1) and (2). A bin with bottom sloping 45° and having a capacity of 270 tons. By ten chutes and ten Hendy feeders to (4).

4. Fifty gravity stamps, arranged in ten batteries, using screens with 0.62 and 0.75-mm. round holes and having mercury fed to the mortar. Pulp to (5); at monthly clean up, battery residue to (7).

5. Ten sets of amalgamated plates and mercury traps, each arranged in the following sequence: Plate on splash board, plate on mortar lip, plate on distributor, No. 1 mercury trap, plate on back deflector, apron plate, No. 2 mercury trap. Pulp to (6); at fortnightly clean up, amalgam to retort yielding gold and mercury.

6. Ten 4-foot Frue vanners and four 5-foot Triumph vanners, all with No. 3 mercury traps on their distributors. Heads to chlorination works; tailings to waste; amalgam from traps is retorted.

7. From (4). The battery residue is ground in a clean up barrel and the amalgam separated out by a revolving pan and retorted; the residue is probably returned to (4).

The labor required is five men per 24 hours. Wages vary from $2.50 to $3.00 per day. Board costs $4.50 per week and wood $3.00 per cord.

Power is derived from "Hurdy-Gurdy" water wheels which are of the Pelton type. One wheel, 3 feet diameter, with 1⅜-inch nozzle, making 150 revolutions per minute, running under a head of 105 feet, drives the vanners. One wheel, 8 feet diameter, with 3½-inch nozzle (should be 3¼-inch), making 100 revolutions per minute and running under the same head, drives the breakers, the stamps and the dynamos for lighting the mill and the mine.

Water is supplied by a ditch. The amount used for power is 480 miner's inches (about 5,385 gallons per minute) and 20 inches for the stamps and vanners (about 224 gallons per minute). The stamps use about 100 gallons per minute.

The ore contains 0.10 to 0.40 ounce gold per ton and the tailings contain from 0.02 to 0.045 ounce per ton, average about 0.03 ounce. One hundred tons of ore yield 1 or 2 tons of concentrates (average 1½ tons) and 98 or 99 tons of tailings. Of the gold caught by amalgamation, 17% comes from the mortar and 83% from the outside plates. The mill saves 80 to 90% of the gold in the ore.

§ 735. MILL NO. 63. BAY STATE MINING COMPANY, COSUMNES RIVER, CALIFORNIA.—Capacity 20 tons per day. The mill runs 24 hours per day, 7 days per week. The ore consists of the economic minerals native gold and auriferous pyrites, and a gangue of quartz stringers in slate. The problem is to save the gold. The ore is hoisted by a skip to the grizzly. The oversize passes through a Blake breaker, 9 × 12 inches, crushing to 1½ inches, and joins the undersize into the bin. Two Hendy feeders feed the ore from the bin to ten gravity stamps arranged in two batteries, using 25-mesh wire screens, and having mercury fed to the mortar. The mortar is cleaned out monthly, yielding coarse ore to be returned, scrap iron to waste and amalgam to retort. The pulp issuing from the screens passes over two sets of amalgamated plates and mercury traps, each consisting of a plate on the mortar lip, No. 1 mercury trap and an apron plate. The amalgam is removed periodically and retorted; the pulp goes to four 4-foot Frue vanners yielding heads to chlorination works and tailings to waste.

Power is furnished by a Pelton wheel.

The ore contains about 0.25 ounce gold per ton; the concentrates contain 5 ounces gold and 9 ounces silver per ton; the tailings contain about 0.03 ounce gold per ton. One hundred tons of ore yield about 1½ tons of concentrates and 98½ tons of tailings. The mill saves about 60% of the gold by amalgamation and 30% in the concentrates, and loses about 10% in the tailings. Ten thousand pounds of concentrates are produced per month.

§ 736. MILL 64. WILDMAN GOLD MINING COMPANY, SUTTER CREEK, CALIFORNIA.—Capacity 93 tons per day. The mill runs 24 hours per day, 7 days per week. The ore consists of the economic minerals native gold and auriferous pyrite, and a gangue of solid quartz, or quartz stringers in slate. The problem is to save the gold. The ore is hoisted from the mine in a bucket and dumped upon (1).

1. A grizzly with 1⅜-inch spaces. Oversize to (2); undersize to (3).

2. One No. 1 Blake breaker, 9 × 12 inches, crushing to 1 inch. To (3).

3. From (1) and (2). No. 1 bin holding 100 tons. By 3 chutes to car holding 1¼ tons, which is wheeled to hydraulic platform elevator and lifted and dumped to (4).

4. No. 2 or mill bins, holding 450 tons, with bottom sloping 45°. By six rack and pinion gates and chutes and six Hendy feeders to (5).

5. Thirty gravity stamps, arranged in six batteries using screens with 0.69 × 9.5-mm. slots and having mercury fed into the mortar. Pulp to (6); every month the mortar is cleaned out and the contents worked up for the amalgam which is retorted.

6. Six sets of amalgamated plates and mercury traps, each arranged in the

following sequence: Plate on mortar lip, apron plate, No. 1 mercury trap, No. 1 sluice plates, No. 2 mercury trap, No. 2 sluice plates, No. 3 sluice plate, No. 3 mercury trap. Pulp to (7); amalgam removed every 24 hours and retorted.

7. Eight 4-foot Frue vanners and four 4-foot Triumph vanners. Heads to chlorination plant; tailings to waste.

The labor required is 4½ men per 24 hours. Wages vary from $2.50 per day to $100 per month.

Power is furnished by a Dodd water wheel, 72 inches diameter, with a 1 5/16-inch nozzle, rated at 50 horse power, making 250 revolutions per minute and using 46 miner's inches of water under a head of 480 feet.

Water is supplied by a ditch and the amounts are 470 gallons per minute for power and 105 gallons for the stamps and vanners.

The ore contains 0.15 to 0.25 ounce gold per ton; the concentrates 3.5 to 4.0 ounces; the tailings a trace to 0.01 ounce, average 0.006 ounce. One hundred tons of ore yield 1½ tons of concentrates and 98½ tons of tailings. The mill saves about 70% of the gold by amalgamation and 25% by concentration and loses about 3 or 4% in the tailings.

Since the author's visit, this mill has been enlarged to 40 stamps with a capacity of 145 tons per 24 hours. There are now 14 Frue vanners and 2 Triumph vanners, and 100 tons of ore yield 1.7 tons of concentrates.

§ 737. MILL NO. 65. MADISON MILL OF THE UTICA COMPANY, ANGELS CAMP, CALAVERAS COUNTY, CALIFORNIA.—Capacity 135 tons per 24 hours. The mill runs 24 hours per day, 7 days per week. The ore consists of the economic minerals native gold and auriferous pyrite, and a gangue of soft slate containing stringers of quartz. The problem is to save the gold. The ore is hoisted by a skip and dumped upon (1).

1. A grizzly with 2-inch spaces. Oversize to (2); undersize to (3).

2. One No. 1 Blake breaker, 10 × 16 inches, crushing to 2 inches. To (3).

3. From (1) and (2). No. 1 bin 24 feet long, 10 feet wide and 15 feet deep in front, with bottom sloping 45°. By six rack and pinion gates and chutes to car which delivers ore to various parts of (4).

4. No. 2 or mill bin 12 feet wide, 60 feet long and 10 feet deep. By eight rack and pinion gates and chutes and eight Hendy feeders to (5).

5. Forty gravity stamps arranged in eight batteries, using screens with 0.76-mm. round holes and having mercury fed to the mortar. Pulp to (6); at the fortnightly clean up, amalgam to (9), and the residue to (8).

6. Eight sets of amalgamated plates and mercury traps arranged in the following sequence: apron plate, distributor, back deflecting plates, two parallel sluice plates, No. 1 mercury trap. Pulp to (7); at clean up, amalgam to (9), and heavy sand to (8).

7. Twelve four-foot Frue vanners and four Union vanners. Heads to chlorination works; tailings to waste.

8. From (5), (6) and (9). A clean up barrel followed by a catch hopper, amalgamated plates and settling tanks like Mill 73. Amalgam and coarse stuff to (9); coarse pulp run over plates to settling tank to be returned to barrel; fine pulp run over plates to settling tank to go to chlorination works.

9. From (5), (6) and (8). Clean up room like that of Mill 73. Amalgam is retorted and the gold melted and shipped, and the mercury used over again in the mill; scrap iron to waste; coarse ore returned to (5); coarse pulp to (8).

Power is furnished by a Leffel double turbine water wheel taking water which has been used in Mills 73 and 74, which are ¾ mile up the river, one being 100 feet above Mill 65 and the other 38 feet.

The adjustments in this mill have been changed since it was visited by the author so that its capacity is now about 200 tons per 24 hours.

§ 738. MILL NO. 66. HOMESTAKE MINING COMPANY, LEAD CITY, SOUTH DAKOTA.—Capacity 400 tons per 24 hours. The mill runs 24 hours per day, 7 days per week. The ore consists of the economic minerals native gold and auriferous pyrite and arsenopyrite, and a gangue of quartz finely distributed in large bodies of mica schist. The problem is to save the gold. The ore from the mine is dumped into (1).

Rock House.

1. No. 1 bin. By gates and chutes to (2).
2. Three No. 1 breakers, Gates No. 6, only two used at a time, crushing to 1½ inches. To (3).
3. No. 2 bins. By cars to (4).

Stamp Mill.

4. No. 3 or mill bin 44½ feet wide, 14¼ feet deep with inverted V-shaped bottom. By twenty gates and chutes (ten on each side) and twenty Hendy feeders to (5).
5. One hundred gravity stamps arranged in two rows with ten batteries in each row, using screens with 0.61-mm. holes and having mercury fed to the mortar. Pulp to (6); at fortnightly clean up, amalgam to (9), coarse lumps returned to mortar, heavy sand and amalgam to (8); wooden chips are removed from the mortar periodically, burned and the ashes go to (9).
6. Twenty sets of amalgamated plates and mercury traps, ten sets on each side of the mill, each set arranged as follows: apron plate, copper lined trough, No. 1 mercury trap lined with copper, sluice plate, No. 2 mercury trap. Pulp to (7); amalgam removed daily from plates is cleaned in a Wedgewood mortar, squeezed and retorted, the heavy sand being sent back to the stamps and the mercury used over in the mill; traps cleaned out monthly to (9).
7. Six Gilpin County concentrators. Heads to chlorination works; tailings to waste. Jigs have been tried in place of the concentrators.
8. From (5). A rocker. Coarse lumps are washed in a coarse screen and yield washings to (9) and residue back to (5); amalgam and heavy sand to (9); light sand to (5); old iron has amalgam scraped off to (9) and then is thrown to scrap heap to rust and the rust is cleaned up yearly to (9).
9. From (5), (6) and (8). A clean up pan, run at time of clean up, having 600 to 700 pounds of quicksilver added to the charge. Time of working is three hours. Fine stuff to waste; coarse sand and liquid amalgam to (10).
10. Settling box. Liquid amalgam is strained, squeezed and retorted, yielding gold to be melted and mercury to be used over again; heavy sand returned to (5); fine overflow to waste.

This company divides its labor so that 19¼ men per 24 hours are charged against the mill. These are divided into two shifts: ¼ foreman, 1 millwright, ½ pipe fitter, 2 engineers, 2 firemen, ¼ night foreman, 1 head amalgamator, 4 amalgamators, 2 breaker men, 2 oilers, 2 feeders and 2 laborers. Wages vary from $2 to $8 per man per day. Wood costs $6 per cord.

Power is supplied by a steam engine with cylinder 20 × 42 inches, having a Meyer cut off valve and rated at 155 horse power; and two horizontal fire tube boilers, 54 inches diameter, 16 feet long, with 46 tubes 3½ inches diameter, running under a steam pressure of 90 pounds per square inch and burning 11 cords of wood per 24 hours.

Water is supplied by a ditch company and costs from $0.50 to $0.57 per stamp per 24 hours. In the winter it has to be supplemented by water pumped from the mine. The amount required is 1½ miner's inches for five stamps (about 16.7 gallons per minute) or about 84 gallons per minute for 100 stamps.

The ore assays from 0.25 to 0.50 ounce gold per ton, the concentrates about 1.25 ounces per ton and the tailings 0.075 ounce per ton. One hundred tons of ore yield not over 3 tons of concentrates and about 97 tons of tailings. They save about 65% of the gold by amalgamation and about 10% by concentration, and they lose about 25% in the tailings. It is claimed that 85% of the free gold is saved. The average yield of the ore by amalgamation for one year was 0.185 ounce ($3.70) gold per ton. The loss of mercury is 0.07 ounce per ton of ore.

This mill has now been increased to 200 stamps. After each mortar there are four apron plates in series, each 12 feet long, 54 inches wide and ½ inch thick. The first is plain copper while the other three are silver plated with two ounces of silver per square foot. This new scheme effected in 1902 an additional saving of approximately $250,000 over that which would have been obtained from the old arrangement. The tailings slime from the plates is at present thrown away while the tailings sand is cyanided and lime is used to assist the settling previous to cyaniding. Addition of this lime to the mortar, as is done in South Africa, caused trouble by coating the plates, and so it is not added until after the pulp has passed over the plates.

§ 739. MILL NO. 67. WEST WAVERLY GOLD MINING COMPANY, LIMITED, WAVERLY, NOVA SCOTIA.—Fig. 424 shows the Oldham mill which is much like this mill.—Capacity 50 to 65 tons per 24 hours. The mill runs 24 hours per day, 6 days per week. The ore consists of the economic minerals native gold and arsenopyrite with small amounts of galena, pyrite, chalcopyrite, and sphalerite, and a gangue of hard quartz. The veins are in magnesian slate and a very hard quartzite called whin rock. The problem is to save the gold. The ore is hoisted from two shafts and dumped over grizzlies into cars holding 1,000 pounds. Cars of waste rock are trammed to the dump, the ore is trammed to (1), the oversize and undersize being kept separate.

1. Five No. 1 bins in one block with bottoms sloping 45° and having a total capacity of 225 tons. By gates and chutes to car holding 1,000 pounds which is trammed 200 feet to the mill, coarse material going to (2) and fine to (3).

2. One Forster breaker, 12 × 24 inches, crushing to 1½ inches. By jerking distributing chutes to (3).

3. From (1) and (2). Three No. 2 or mill bins, with bottoms sloping 43°, one holding 25 tons for two batteries and two holding 10 tons each for the other two batteries. By four gates and chutes and four Hammond corrugated cylinder feeders to (4).

4. Twenty gravity stamps, arranged in four batteries, using screens with 0.64 × 12.7-mm. slots and having mercury fed to the mortar. Pulp to (5); at clean up, amalgam and mortar residue to (8).

5. Four sets of amalgamated plates and mercury traps arranged as follows: a splash plate, a back deflecting quadrant plate, an apron plate, No. 1 mercury trap, No. 2 mercury trap. Pulp to (6) or (7); at clean up, amalgam and heavy sands to (8).

6. A Golden Gate concentrator. Heads to concentrates pile; tailings to (7).

7. From (5) or (6). No. 3 mercury trap. Pulp to waste; every six months amalgam and heavy sand cleaned out to (8).

8. From (4), (5) and (7). Clean up room containing iron panning tubs, sink, muller mortar, gold hand pans, sieves and squeezing cloths. The material is worked up and yields coarse sand returned to (4); scrap iron to waste, concentrates to pile, hard amalgam to be retorted and melted, and mercury to be used over in the mill.

The labor required is 7 men per 24 hours divided into two shifts: 1 foreman, 2 engineers, 1 breaker man, 2 amalgamators, 1 helper. Wages vary from $1.20 to $2.50 per man per day. Board costs $3.50 to $4 per week, coal $3.42 per ton.

Power is supplied by a tandem compound engine with cylinders 8 × 12 inches and 12 × 12 inches, having a Meyer adjustable cut off valve on the high pressure cylinder cutting off at ½ stroke when full mill is running, and a simple valve on the low pressure cylinder cutting off at ¾ stroke. Running under a steam pressure of 100 pounds per square inch and with a Bulkley condenser 34½ feet high with 3-inch column, it indicates 42 horse power: 26 for stamps, 12 for breaker and jerking chutes, and 4 for friction of shafting.

Water runs into the mill from a brook. In case of necessity it can be repumped from the pond into which the tailings flow, by a Northey duplex pump with steam cylinder 5 × 12 inches and water cylinder 8 × 12 inches delivering 130 gallons per minute. The water used for the stamps is from 50 to 65 gallons per minute. The water for the boilers has to be settled and Pearline is put into the boilers monthly to soften the scale. The total water used in the mill including the boilers and everything is 150 gallons per minute.

The ore assays 0.25 to 1.25 ounces gold per ton; the concentrates 0.25 to 0.65 ounce; the tailings 0.011 to 0.040 ounce, average 0.025 ounce. One hundred tons of ore yield 2 tons of concentrates and 98 tons of tailings; 10% of the gold comes from the outside plates and 90% from the mortar and inside plate. The mill saves about 95% by amalgamation and about 2% by concentration, and the balance is lost in the tailings. The loss of mercury is from 0.4 to 0.6 ounce per ton of ore.

A special feature of this mill is that the No. 1 bins (1) give an opportunity to store separately the ore from the different workings of the mine while in progress as shafts, levels, winzes or stopes. When a bin has accumulated sufficient ore for a run one or more batteries are set to work upon it. At the end of the run, usually 13 days, comes the clean up and the yield in the mill is credited to the particular working from which the ore came. In this way the mill becomes the assay office of the mine and the superintendent is able to calculate thereby the profit or loss in each part of the mine. Another feature is the small amount of gold in the concentrates from this ore. They are too poor to pay for treatment and consequently the concentrator (6) is rarely used, but the pulp passes straight from No. 2 mercury trap (5) to No. 3 trap (7). A Gilpin County concentrator was also tried with very poor results.

§ 740. MILL NO. 68. MONTANA MINING COMPANY, LIMITED, MARYSVILLE, MONTANA. GOLD MILL.—The ore of the Drumlummon mine consists of the economic minerals native gold, tetrahedrite, pyrite, chalcopyrite, blende, galena, arsenical polybasite and argentite, and a gangue of quartz, slate, granite, and calcite with manganese oxides in small amounts. The problem is to save the gold and silver. The ores are classed in the mine into two kinds: (*a*) ores rich in silver containing 10 to 15 ounces silver and 0.25 to 0.50 ounce gold per ton; and (*b*) ores low in silver containing 2 to 4 ounces silver and 0.20 to 0.40 ounce gold per ton. The rich silver ores go to Mill 82 while the poor silver ores go to Mill 68.

Mill 68 has a capacity of 105 tons per 24 hours. The mill runs 24 hours per day, 7 days per week. The scheme of treatment is the same as in the gravity stamp mills previously described. The ore is brought by cars, holding one ton each, to a No. 1 or receiving bin with bottom sloping 45° and holding from 2,000 to 3,000 tons. The No. 1 bin delivers by six gates and chutes to six grizzlies with 1½-inch spaces. The oversize is broken in three Blake breakers, 9 × 15 inches, crushing to 1½ inches, and, with the undersize, goes to No. 2 or stamp bin which has a bottom sloping 45° and holds 300 tons. The ore now goes by twelve chutes through twelve Hendy feeders to sixty gravity stamps arranged in twelve batteries, using screens with 0.52-mm. square holes and having no mercury fed to the mortar. The pulp from each battery of stamps passes over a plate on the

mortar lip, over an apron plate, and through a copper lined launder to two 4-foot Frue vanners which have amalgamated plates on their distributors. This makes 24 vanners in the whole mill. The heads of the vanners are shipped to smelter and the tailings go to waste. As no mercury is fed to the mortar it is cleaned out only when the dies are worn out and it yields coarse ore and sand returned, scrap iron to waste, and concentrates to smelter. The amalgam is removed from the lip and apron plates every 24 hours, from the plates on the vanners every 7 days and from the copper lined launder once a month. Amalgam from the plates is clean enough to squeeze and retort direct while that from the launder is ground in a clean up pan and yields amalgam to retort and sand which, if rich, is shipped as concentrates or, if poor, is sent back to the stamps. The slag from melting bullion is crushed so that any shots of precious metal may be picked out and the residue is allowed to accumulate up to about 1,000 pounds when it is shipped to the smelter.

The labor required is 15 men per 24 hours: 1 foreman, 2 engineers, 2 firemen, 3 breaker men, 3 battery men, 2 vanner men and 2 plate men. The breaker men and battery men work 8-hour shifts while all the rest work 12 hours. Wages vary from $3 per day for laborers to $4 or $4.50 per day for mechanics. Board costs $1 per day. Wood is $3.80 per cord.

Power is furnished by a Corliss engine indicating 130 horse power. The boilers burn 4½ cords of wood per day.

The water required is 148 gallons per minute divided as follows: 4 gallons for the boilers, 120 gallons for the stamps and 24 gallons for the vanners.

The ore assays 2 to 4 ounces silver and 0.20 to 0.40 ounce gold per ton; the concentrates contain 120 ounces silver and 3.5 ounces gold per ton; the tailings contain 0.4 to 1.1 ounces silver and 0.05 ounce gold per ton; for some assays of special samples, see Table 318; another special set of assays showed pulp from the mortar to have 1.4 ounces silver and 0.4 ounce gold per ton, pulp fed to vanners to have 1.0 ounce silver and 0.2 ounce gold, and the vanner tailings to have 1 ounce silver and 0.04 ounce gold. One hundred tons of ore yield ¾ to 1 ton of concentrates and about 99 tons of tailings. The mill saves about 40% of the silver and 70% of the gold by amalgamation, 40% of the silver and 15% of the gold by concentration and loses 20% of the silver and 15% of the gold in the tailings. The mill ships from 1,300 to 1,400 ounces of bullion per month. The loss of mercury is 0.1 ounce per ton of ore.

Since the author's visit a cyanide plant with a capacity of 400 or 500 tons per day has been installed to treat the tailings from Mills 68 and 82.[284] The tailings are impounded by five dams in the gulch and are transported to the plant partly by sluicing and partly by a narrow gauge railway. The tailings yield something over $2 per ton and the cost of treatment is a little over $1 per ton.

§ 741. MILL NO. 69. AMERICAN DEVELOPING AND MINING COMPANY, GIBBONSVILLE, IDAHO.—Capacity 97 to 112 tons per 24 hours. The ore consists of the economic minerals auriferous pyrites and a little argentiferous chalcopyrite and a gangue of slate and quartz with some calcite and a little hematite. The problem is to save the gold. The ore goes to No. 1 or receiving bins and thence to a grizzly with 1½-inch spaces. The oversize is broken by a Blake breaker, 9 × 15 inches, crushing to 2½ inches, and with the undersize goes to the No. 2 or battery bins which have a capacity of 200 tons, or 300 if filled by shovel. Six gates and chutes deliver the ore from the No. 2 bins through six Hendy feeders to 30 gravity stamps arranged in six batteries. The stamps weigh 950 pounds and drop 6 inches 100 times per minute. The mortar is narrow, has single discharge and has an inside amalgamated plate on the chuck block. The height of discharge is about 9 inches. Fargo guides, Blanton cams and shoes of chrome or Midvale steel are used. The screens are of burned tin plate, have 0.66-mm.

round holes and last about two weeks. The pulp from the stamps passes over six amalgamated silver plated copper plates in parallel, each 16 feet long and sloping 1¾ inches per foot. Each plate has a mercury trap at its lower end and then a distributor to divide the pulp to the Frue vanners of which there are fifteen in the whole mill. The vanners have smooth belts six feet wide and use amalgamated plates on their distributors. The heads of the vanners are chlorinated and the tailings go to waste. The mortar and the amalgamated plates are cleaned periodically for the recovery of amalgam which is retorted.

The labor charged against the mill is 8½ men per 24 hours: 1 breaker man, 2 amalgamators, 2 vanner men, 1 wheeler, etc., ½ oiler, etc., ½ machinist, ½ carpenter, ½ night watchman, ½ foreman, ½ assayer. The amalgamators and vanner men are divided into two shifts. Wages vary from $3 to $5 per man per day.

Power for running the mill and for electric lighting is obtained from Pelton water wheels, supplemented by steam during six months of winter.

The ore assays 0.45 to 0.55 ounce gold per ton; the concentrates assay 1.75 to 2.75 ounces gold per ton and have 0.5 to 1.0% copper; the tailings assay 0.01 ounce per ton (average of 3 months was $0.23 per ton). One hundred tons of ore yield 8 or 9 tons of concentrates and 91 or 92 tons of tailings. The mill saves 53% by amalgamation and 45% by concentration and loses 2% in the tailings. The bullion is 840 to 860 fine in gold and 125 to 140 fine in silver.

Notice that this mill has fifteen vanners for thirty stamps whereas the usual practice in the California mills previously described would call for only twelve. The reason for this is the high amount of concentrates (7 to 10%) in this ore as compared with the low amount (2 or 3%) found in California ores.

A canvas plant, similar to Mill 78, was installed to treat the tailings of this mill but it was a financial failure, not because it did not save fine concentrates, but because the fine concentrates when saved contained only 0.5 to 0.6 ounce gold per ton which would not pay for chlorinating. It seems to be a peculiarity of this ore that the fine concentrates are much poorer than the coarse, which is just contrary to the author's experience with California gold ores which have the fine concentrates as rich or richer than the coarse. One theory regarding Mill 69 is that the gold, although contained in the pyrites and not visible to the eye, is nevertheless practically all free milling and hence the smaller the particle of pyrite the better the mercury has been able to act on it and the more it has been robbed of its gold.

§ 742. MILL NO. 70. NEWTON GOLD MILL, IDAHO SPRINGS, COLORADO.—The ore from the Newton mine and custom ores which are also treated, consist of the economic minerals auriferous pyrites and some native gold and a gangue of quartz. The ores are divided into two grades: (*a*) a grade which has large grains of pyrite and more gold and is treated by Mill 85, and (*b*) a grade with finer grains of pyrite disseminated in quartz and less gold, treated in Mill 70.

Ore is brought in wagons and shoveled to a receiving bin and thence shoveled or wheeled to twenty gravity stamps, arranged in four batteries, using screens with round holes and having mercury fed to the mortar. The pulp from the stamps passes over four amalgamated plates in parallel, four mercury traps and four double Gilpin County concentrators. The heads of these concentrators are shipped to the smelter and the tailings go to waste. The mortars, amalgamated plates and mercury traps are cleaned up periodically obtaining thereby amalgam which is retorted and sulphurets which are put with the concentrates.

Power is derived from Leffel water wheels.

(*p*) GOLD MILLS USING GRAVITY STAMPS, AMALGAMATED PLATES AND VANNERS, AND CANVAS OR BLANKET TABLES.

§ 743. This group includes Mills 71 to 80 inclusive. Mill 71 is followed by a

canvas plant (Mill 78). Mill 72 is followed by a canvas plant (Mill 79). Mills 73 and 74 were formerly followed by a canvas plant (Mill 80) and that was again followed by an arrastra (Mill 81). Mill 80 has recently been changed over to be like Mill 78. Mill 75 has recently installed a canvas plant like Mill 78. Mill 76 uses carpet tables. Mill 77 has blanket tables. Mill 78 catches on 2,400 square feet of canvas tables about $1,500 per month in the fine slimes of auriferous pyrite which are too fine to be caught on the vanners of Mill 71.

It should here be said that while canvas plants like Mill 78 do such good work on tailings of vanners of Mill 71 and Mill 55, both of these mills yield fine concentrates of high assay value. It would be idle to put in the canvas plant after such mills as Mills 61, 67, 69 or 77 where the assay value of the fine concentrates is not high.

§ 744. California and Colorado Systems of Stamp Milling.—Mill 77 and also Mill 88 use the Colorado system of stamping while the other gold stamp mills described in this chapter use the California system. The relative advantages of these two systems have proved a fruitful topic of discussion. The California system is by far the more extensively used in almost all localities where stamp milling is practiced, while the Colorado system is limited almost entirely to Gilpin County, Colorado, with an occasional application elsewhere and its use seems to be on the decrease. The average ores treated by the California system are free milling ores containing less than 5% sulphides (usually pyrite) with considerable of the gold (as coarse gold) in the quartz. The Gilpin County ores are free milling but contain a high per cent. of pyrite (between 10 and 20%). The gold is commonly in fine particles and more or less included in the pyrite.

The characteristics of the two systems have been somewhat discussed in § 197 and § 199. The chief characteristics of the California system are coarser stamping accompanied by a higher capacity (two, three, or even four tons per stamp per 24 hours) which are due to a lower discharge in the mortar, greater weight of stamp, shorter drop, and greater number of drops per minute. There may be also a coarser screen and higher percentage of opening although this is not always true. All these conditions keep the ore a less time in the mortar and there is less sliming, the grains of pyrite are less worn into rounded forms and the following concentration is made under more favorable conditions and without so much loss.

The characteristics of the Colorado system are fine stamping and low capacity (about one ton per stamp per 24 hours). These result from the use of a higher discharge in the mortar, lighter stamp, longer drop and less number of them. The finer screen and smaller percentage of opening in it are not necessarily used although commonly so. This treatment keeps the stuff in the mortar a much longer time, which is necessary to free the gold in order that a satisfactory amount of it may be amalgamated. It involves, however, more sliming of the ore and sliming of the pyrite more than the gangue since it is heavier and not discharged so quickly, and consequently the following concentration is not so easy and the losses are greater. The average extraction of gold is not materially different with the two systems. According to Rickard each system extracts about 70% by amalgamation. The horse power required per ton is greater for the Colorado owing to the greater amount of work required for finer stamping. For this reason and also on account of the lower capacity the cost per ton is higher for the Colorado than for the California.

Each system has its place and gives the best results commercially on its own class of ore. Rickard[99] has given this comparison: The Colorado system on Gilpin County ore worth $8 per ton would extract $5.60 a ton at a cost of $0.70, while the California system, failing to liberate the gold, would extract only $4

per ton at a cost of $0.25. The net result is then $5.60—$0.70 or $4.90 for the Colorado, against $4.00—$0.25 or $3.75 for the California, or a balance of $1.15 per ton in favor of the Colorado system. On the other hand on California ore worth $6 per ton the California system will extract $4.30 at a cost of $0.35, while the Colorado system would extract $4.50 at a cost of $1. The net result in this case is $3.95—$3.50 or $0.40 per ton in favor of the California system. It should also be noted that a Colorado mill requires at least twice as much capital to build as a California mill of the same capacity. The above figures deal only with the extraction of gold by amalgamation; the saving by later concentration is not here considered. The question of the application of concentration followed by amalgamation on Gilpin County ores will be taken in § 763.

It should be noted that the California system was used in Gilpin County in the early days and gave very satisfactory results as long as only oxidized surface ores were encountered. With greater depths, however, the sulphide ores appeared and the extraction fell off. Owing to extremely high freight and smelting charges it would not pay to concentrate, and finally the Colorado system of stamp milling was evolved as the only profitable method of working. Later on when competition among smelters increased the value of the concentrates, concentrating of the tailings became common practice. This shows why the Colorado system came into existence and it is easy to understand that after having once been adopted, conservatism would cause it to continue to be used as long as it proved satisfactory, even though there might be other processes that could effect a little better saving. To-day it seems that it is being so far modified as to increase the number of drops of the stamps and at the same time shorten the height; and on ores with a high percentage of sulphides (over 15%), especially when the value of concentrates per ton is high, this modified mill will save more value per ton than the regular Colorado mill.

§ 745. MILL NO. 71. KENNEDY MINING AND MILLING COMPANY, JACKSON, AMADOR COUNTY, CALIFORNIA.—Capacity 96 tons in 24 hours. The mill runs 24 hours per day, 7 days per week. The ore consists of the economic minerals native gold and auriferous pyrites and a gangue of quartz stringers and slate. The vein has a black gouge on each side about a foot thick. The problem is to save the gold. The ore is brought in cars and dumped through six holes into a receiving bin 60 feet long, 8½ feet wide, and 30 feet deep with a flat bottom. The ore is delivered from the bins by eight gates and chutes through eight Hendy feeders to forty gravity stamps, arranged in eight batteries, using 30-mesh brass wire screens and having mercury fed to the mortar. The pulp from the stamps passes over eight sets of amalgamated plates and mercury traps, each set arranged as follows: plate on splash board, plate on mortar lip, apron plate, No. 1 mercury trap, two steps covered with rubber, No. 2 mercury trap, two parallel No. 1 sluice plates, No. 2 sluice plate, No. 3 mercury trap. From No. 3 mercury traps the pulp goes to twenty-four 4-foot Frue vanners having No. 4 mercury traps above their distributors. The heads from the vanners go to chlorination works and the tailings are sold to Mill 78. The mortars and mercury traps are cleaned up once a month by means of scrapers, pans, muller mortar, ball mill and amalgamated plates and the amalgam obtained is retorted while the sulphurets are sent to chlorination works. The amalgamated plates are scraped once an hour with rubbers and the fine rich sulphurets are separated from the amalgam, roasted in a small furnace and smelted with fluxes in a crucible.

Power is furnished by Pelton water wheels. One wheel 4 feet diameter under 230 feet head runs the stamps; one wheel 4 feet diameter under 60 feet head runs the vanners and also the saw mill containing a cutting off saw, rip saw, and a wedge saw. A dial shows the speed of the vanners directly so that the

vanner man is able to keep the speed constant by letting on or shutting off the water on the water wheel.

Water is supplied by a ditch company. The stamps alone require 120 gallons per minute.

The concentrates contain from 4 to 5 ounces of gold per ton and the tailings from 0.050 to 0.075 ounce. One hundred tons of ore yield about 2.8 tons of concentrates and 97.2 tons of tailings. The amount of concentrates varies from 60 to 90 tons per month.

Since the author's visit the capacity of this mill has been increased to about 4,000 tons per month or about 135 tons per 24 hours. This has been accomplished by substituting a 24-mesh screen in place of the 30-mesh, by increasing the height of the drop of the stamps from 6½ to 7½ inches and the number of drops per stamp from 82 to 95 per minute.[172]

§ 746. MILL NO. 72. KEYSTONE CONSOLIDATED MINING COMPANY, AMADOR CITY, CALIFORNIA.—Capacity 120 tons per 24 hours. The mill runs 24 hours per day, 7 days per week. The ore consists of the economic minerals native gold and auriferous pyrites and a gangue varying from stringers of quartz in slate on the foot wall to large bodies of quartz on the hanging wall. The vein has a good gouge on the foot wall. The problem is to save the gold. The ore hoisted from the mine by a skip is dumped upon a grizzly with 2-inch spaces. The oversize is broken by a Blake breaker, 9 × 16 inches, crushing to 1½ inches, and with the undersize goes to the ore house holding 3,000 tons. From this a chute delivers to cars holding 1,200 pounds which carry the ore to the mill bin which has a bottom sloping 45° and has a capacity of 300 tons. The mill bin delivers by nine chutes through nine Templeton roller feeders to forty gravity stamps, arranged in eight batteries, and one Griffin roller mill; the Griffin roller mill corresponds to one battery of stamps. The ore is stamped or ground to pass through screens with 0.56 × 6.35-mm. slots and mercury is fed during the crushing. The crushed pulp passes over nine sets of amalgamated plates and mercury traps, each set being arranged as follows: plate on mortar lip, a cross collecting launder, a 2½-inch pipe with a T on its end, No. 1 mercury trap, No. 2 mercury trap, apron plate, No. 3 mercury trap, No. 4 mercury trap, No. 5 mercury trap. From the No. 5 mercury traps the pulp passes to nine 7-belt Woodbury vanners and one 13-belt Woodbury vanner, eight of the vanners being fed with stamp stuff and two with Griffin mill stuff. The heads from the vanners are treated on a rocking table while the tailings pass in succession through No. 6 mercury trap, No. 7 mercury trap, and No. 8 mercury trap which are in the main tail launder of the mill, and then go to Mill 79.

The rocking table is a rectangular table 20 inches wide, 12 feet long, and 5 inches deep, mounted on two transverse curved rockers, 24 inches long, 2½ inches wide at the ends and 6 inches wide at the middle. The table has a slope downward of 1° 10′ or about ¼ inch per foot. The rocking is imparted by a side arm and a vertical connecting rod leading up to an eccentric. The sides rise and fall 1½ inches. The material is fed to the table through a screen at the upper end with water and is shoveled over and over toward the upper end. The table yields clean heads to the chlorination works and tailings which join the vanner tailings going to No. 6 mercury trap.

The amalgam is removed from the amalgamated plates every 24 hours and retorted. The mortars, Griffin mill, and mercury traps are all cleaned up monthly, yielding amalgam and sand which are charged to a clean up barrel to brighten rusty gold and complete its amalgamation. The clean up barrel discharges gradually to a mechanical batea the fine overflow of which passes in succession over two amalgamated plates, No. 9 mercury trap and a settling tank. The residue in the batea is cleaned up with hand pans and yields amalgam to be

retorted, scrap iron to waste, coarse material back to the stamps, and rich concentrates to the chlorination works. The amalgam caught on the two amalgamated plates is scraped off and retorted. The stuff from No. 9 mercury trap goes back to the clean up barrel. The settlings in the settling tank go to the rocking table previously described and the water goes to the tailings launder.

The labor required is 5 men per 24 hours, divided into two shifts. Wages vary from $2.50 per day for laborers to $3 for mechanics. Board costs $24 per month and wood is $5.50 per cord.

Power is derived from a Knight water wheel 6 feet diameter with a ¾ × 10-inch adjustable slot for a nozzle, running at 200 revolutions per minute under a head of 276 feet, rated at 85 horse power and using 144 miner's inches of water (about 1,500 gallons per minute).

Water is supplied by a ditch company and costs $0.20 per miner's inch per 24 hours. One inch is counted as equivalent to 0.6 horse power.

The value of the ore treated is very irregular; the concentrates from the rocking table assay 6 ounces gold per ton and amount to 16 tons per month; the mill tailings assay 0.044 ounce gold per ton. One hundred tons of ore yield 0.4 ton of concentrates to chlorination works and 99.6 tons of tailings to Mill 79.

This mill formerly had a Gold King amalgamator in place of one set of amalgamated plates and mercury traps, but it was not a success.

Recently a Pelton wheel was installed to run the vanners independently from the stamps and at the same time the speed of the stamps was increased to 100 drops per minute.[172] Experiment has shown that by narrowing the mortar, lowering the height of discharge in the mortar, cutting down the water used in tamping and using an apron plate 16 feet long, 5 feet wide, and sloping 1¾ inches per foot, the value of the tailings is considerably decreased and it is planned to adopt these changes throughout the mill. The Griffin mills are idle and eight Woodbury tables have been substituted for the vanners on eight batteries (see § 494).

§ 747. MILL NO. 73. UTICA MILL OF THE UTICA COMPANY, ANGELS CAMP, CALAVERAS COUNTY, CALIFORNIA.—Capacity 210 tons per 24 hours. The mill runs 24 hours per day, 7 days per week. The ore consists of the economic minerals native gold and auriferous pyrites and a gangue of quartz stringers in slate. The vein has a good clay gouge on both sides. The problem is to save the gold. The ore is hoisted from two shafts in skips three feet square and 5 feet 10 inches deep and dumped upon two grizzlies with 1¾-inch spaces. The oversize is crushed in two Blake breakers, 12 × 16 inches, crushing to 1½ inches, and with the undersize goes to two No. 1 bins, each holding 50 tons. From these the ore is conveyed by cars to No. 2 or mill bin holding about 600 tons and divided by partitions into three compartments. The ore then goes by twelve chutes through twelve Hendy feeders to 60 gravity stamps arranged in twelve batteries using screens with 0.76-mm. round holes and having mercury fed to the mortar. The pulp from the stamps passes over twelve sets of amalgamated plates and mercury traps each arranged as follows: wooden board on mortar lip, a transverse trough 11 inches wide with two spouts, two back deflectors side by side with plates on them, two parallel No. 1 sluice plates, No. 1 mercury trap, No. 2 mercury trap, No. 2 sluice plate. The pulp from the No. 2 sluice plates goes to twenty-four 4-foot Frue vanners with amalgamated plates on their distributors. The heads of the vanners go to the chlorination works and tailings by a flume ¾ mile to Mill 80.

Amalgam is removed from the No. 1 plates every 24 hours, from the plates on the vanners every week and from the other plates every two weeks. The regular clean up of the mortars, traps and plates comes every two weeks, and the material is worked up by pans, clean up barrel, amalgamated plates, settling tanks,

strainers and retort. The details have been given fully in §§ 184, 228, 533 and 558 and need not be repeated here.

The labor required is 7 men per 24 hours besides the superintendent and breaker men, divided into two shifts: 2 feeders, 1 day amalgamator, 1 night amalgamator, 2 vanner men and 1 helper.

Power is furnished by Pelton water wheels running under 420 feet head which gives a pressure of 185 pounds per square inch. No. 1 wheel, 6 feet diameter, with 2⅛-inch nozzle, runs the stamps. No. 2 wheel, with 1¼-inch nozzle, runs the vanners. There are also two more wheels for running the Blake breakers in the two shaft houses.

Water is brought by a 22-inch pipe which has two 18-inch branches, one for Mill 73 and one for Mill 74. The water required in the stamp mortars is 100 gallons per minute and on the vanners 27 gallons per minute making a total of 127 gallons plus that used for power.

The ore assays from 0.2 to 1.25 ounces gold per ton and the tailings assay from 0.02 to 0.075 ounce gold per ton. One hundred tons of ore yield about 2½ tons of concentrates and 97½ tons of tailings. The mill saves 90 to 95% of the gold. The loss of mercury is 0.076 ounce per ton of ore.

By changing the adjustments in this mill the superintendent has been able to increase the capacity to 300 tons per 24 hours. The Pelton wheels have been replaced by motors using electricity generated from water power at a central power plant.[172]

§ 748. Mill No. 74. Stickles Mill of the Utica Company, Angels Camp, Calaveras County, California.—This mill is owned by the same company as owns Mill 73 and works on similar ore and the description of Mill 73 applies to this mill with the following exceptions: (1) There is but one shaft and hence but one grizzly, Blake breaker and No. 1 bin. (2) There is a curved amalgamated plate between the screen and the mortar lip. (3) There are no No. 2 sluice plates or No. 2 mercury traps. (4) There are 16 Tulloch vanners and 8 Frue vanners instead of 24 Frues.

§ 749. Mill No. 75. Zeile Mining Company, Jackson, Amador County, California.—Capacity 150 tons in 24 hours. The mill runs 24 hours per day, 7 days per week. The ore consists of the economic minerals native gold and auriferous pyrites and a gangue of quartz interstratified with slate and talcose slate. The problem is to save the gold. The ore is hoisted from the mine in a skip holding two tons and dumped upon a grizzly. The oversize is crushed in a Blake breaker, 9 × 15 inches, and with the undersize drops into a chute from whence it is hauled by a little mule in a 2-ton car to the mill 500 feet distant. The car, which opens at the bottom, is emptied into the mill bin which is 16 feet wide, 20 feet deep in front, and 60 feet long with a 45° bottom and holds 500 tons. The ore now goes by eight chutes through eight Hendy feeders to forty gravity stamps, arranged in eight batteries, using screens with 1.13-mm. square holes, and having mercury fed to the mortar. The pulp from the stamps flows over eight sets of amalgamated plates and mercury traps, each set being arranged as follows: apron plate, sluice plate, No. 1 mercury trap. From the traps it goes to sixteen 4-foot Frue vanners. The heads of the vanners are sent to chlorination works and the tailings go to a canvas plant. The mortars, plates, and traps are cleaned up monthly and the amalgam and sand obtained are ground in a clean up barrel, yielding amalgam to be retorted, and residue to be returned to the stamps.

The labor required is four men per 24 hours, divided into two shifts: 2 battery men and 2 vanner men. Wages vary from $2 per day for laborers to $3 for vanner men. Board costs $22 per month.

Power is derived from a Pelton wheel, 6 feet diameter, with two 2½-inch rubber

nozzles, running under a head of 150 feet, making 146 revolutions per minute, using 187 miner's inches of water (1,944 gallons per minute) and rated at 65 horse power.

The water used on the stamps and vanners is 12 miner's inches (125 gallons per minute). The stamps use about 80 gallons per minute and the vanners use the balance.

The ore assays 0.2 to 0.25 ounce gold per ton, the concentrates 5 ounces per ton and the tailings 0.062 ounce gold per ton. One hundred tons of ore yield 2¼ to 2½ tons of concentrates and 97½ to 97¾ tons of tailings. The mill saves about 25% by amalgamation and 50% by concentration, and loses 25% in the tailings. Of the gold lost in the tailings ⅓ is free gold and ⅔ are in the sulphurets.

The tailings of this mill, amounting to about 150 tons per 24 hours, with the accompanying water are elevated by a centrifugal pump 13½ feet to a canvas plant[172] similar to Mill 78, having one hydraulic classifier with two spigots, 42 canvas tables each 10 × 12 feet, a hydraulic elevator for canvas table heads, and a vanner. Two tables treating the spigot products of the classifier, have a slope of 3 inches per foot, and yield 1½ tons of concentrates per month. Thirty-two tables treat the overflow of the classifier and slope 1¼ inches per foot. There are eight auxiliary tables for use when cleaning the regular tables. The vanner yields 900 pounds of concentrates from 1,000 pounds of stuff fed. This mill has recently discontinued the use of the vanner and washes off more gangue on the canvas tables. This gives more concentrates but of a lower grade. The economic result, however, has not been published.

§ 750. Mill No. 76. Gentle Annie Mill, Placerville, California.—Capacity 15 to 25 tons per 24 hours. The mill runs 24 hours per day, 7 days per week. The ore consists of the economic minerals native gold and auriferous pyrites and a gangue of quartz stringers in slate. The problem is to save the gold. The ore is brought in cars and dumped on a grizzly. The oversize is broken by hand sledges and with the undersize goes to the mill bin. This delivers the ore by two chutes through two Hendy feeders to ten gravity stamps arranged in two batteries, using 30-mesh screens and having mercury fed to the mortar. The pulp from the stamps passes over two sets of amalgamated plates and mercury traps each arranged as follows: plate on splash board, plate on mortar lip, back deflector of wood, No. 1 apron plate, No. 1 mercury trap, No. 2 apron plate, back deflector of wood, No. 3 apron plate. The pulp next passes over two carpet tables to two 6-foot Frue vanners. The heads of the vanners go to chlorination works and the tailings are waste. The mill is cleaned up monthly yielding amalgam to be retorted, and concentrates to chlorination works. The carpet tables are cleaned every six hours and the concentrates obtained are treated in a clean up barrel and then go to a catch hopper and over amalgamated plates to a tank with a burlap filter in the bottom. The amalgam from the barrel and plates is retorted and the concentrates caught in the tank go to chlorination works.

Power is furnished by a Knight water wheel, 4½ feet diameter, running under 160 feet head and using 50 miner's inches of water (about 550 gallons per minute).

Every ton of ore yields from 0.15 to 1 ounce gold, caught by amalgamation, and 2 to 2½% of concentrates which assay from 2 to 4 ounces gold per ton.

§ 751. Mill No. 77. Hidden Treasure Mill, Blackhawk, Gilpin County, Colorado.—Capacity 85 tons in 24 hours. The mill runs 24 hours per day, 7 days per week. This is a custom mill treating ores from the California mine and other mines. The ore consists of economic gold and silver bearing minerals of which pyrite, chalcopyrite and blende predominate, and tetrahedrite, arsenopyrite, and galena are present in noteworthy proportions, and a soft gangue of quartz and feldspathic material, much decomposed, with small amounts of

calcite and siderite. The problem is to save the gold and silver. The ore is brought in bottom dumping railroad cars holding 9 tons each, 5 to 10 cars in a train and dumped into (1) or if the ore is brought by 4-horse wagons it is shoveled into (1) from the back.

1. Fifteen bins, each 9 feet long, 7 feet wide, and 10 feet deep and holding 40 tons. By shovel to (2), the coarse lumps being broken by hand sledges.

2. Seventy-five gravity stamps arranged in fifteen batteries, using screens with 0.43×9.5-mm. slots and having mercury fed to the mortar. Pulp to (3); inside plates cleaned every two days and yield amalgam to be retorted; mortar cleaned out when dies wear out, but practically no amalgam accumulates in the mortar so that stuff is all put back.

3. Fifteen amalgamated plates. Pulp to (4); amalgam removed every 24 hours, cleaned in a hand mortar and retorted.

4. Fifteen No. 1 mercury traps. Pulp to (5); sand and amalgam cleaned out periodically and ground in a Bartola pan and the amalgam panned out by hand and retorted.

5. Fifteen blanket tables or strakes. Heads rinsed off every two to four hours in a tank of water, sacked up and shipped to smelter; tailings to (6).

6. Fifteen No. 1 Gilpin County concentrators, with amalgamated copper plates on their surfaces. Heads to smelter; tailings to (7); amalgam removed from plates every two months and retorted.

7. Five No. 2 double Gilpin County concentrators, having an inclined screen, with 0.37-mm. square holes, attached to and bumping with each table. Oversize of screen is waste; undersize to the table; heads of tables to smelter; tailings to waste.

The labor required is 11 or 12 men per 24 hours, divided into two shifts: 1 mill man, 1 assistant, 6 feeders, 2 concentrator men, 1 or 2 laborers to fire boilers, load concentrates, etc. Wages vary from $2.75 to $5.83 per day, the feeders and concentrator men getting $3 per day. Board costs $22 per month, wood $4.50 per cord and coal $3.25 per ton.

Power is furnished by an overshot water wheel 50 feet diameter, 5 feet breast, making two revolutions per minute. This is supplemented during the fall and winter by two steam engines, one for the stamps and one for the concentrators. Steam is supplied from two boilers, 16 feet long, 54 inches diameter, with flues 3 inches diameter, and running under a steam pressure of 60 pounds per square inch. Even when there is practically no water, the wheel is run to keep it from drying on one side and getting out of balance. It also acts as a speed regulator.

The ore is very variable, and the following figures apply only to that from the California mine. The average value is about $10 or $15 per ton in gold and silver; the concentrates contain 0.5 to 0.6 ounce gold per ton and 10 to 12% silica. The tailings assay 0.03 to 0.10 ounce gold and 0.50 to 1.50 ounces silver per ton. 100 tons of ore yield 10 to 20 tons of concentrates (average of a year was 13 tons) and 80 to 90 tons of tailings, of which 15 to 20 tons are quartz and 60 to 70 tons are decomposed feldspathic material. 90% of the concentrates come from No. 1 concentrators (6). The loss of mercury is 0.2 ounce per ton of ore.

In a special run of 8,064 pounds of ore, assaying 1.85 ounces gold and 8.75 ounces silver per ton, they obtained 24½% concentrates, assaying 1.76 ounces gold and 10.34 ounces silver per ton, and the balance in tailings assaying about 0.15 ounce gold and 3.7 ounces silver per ton. The mill saved 71% of the gold and 43% of the silver by amalgamation, and 23% of the gold and 31% of the silver by concentration, and lost 6% of the gold and 26% of the silver in the tailings.

Canvas tables have been tried in this mill, but the amount of labor required and the low grade of the concentrates made them an economic failure. Since the author's visit to this mill, rock breakers and automatic feeders have been put in and ten quick drop stamps have been added, with plates and Gilpin County concentrators, followed by sizing and Frue vanners.

§ 752. MILL NO. 78. GATES CANVAS PLANT OF THE KENNEDY MINING AND MILLING COMPANY, JACKSON, AMADOR COUNTY, CALIFORNIA.—Capacity about 100 tons per day. The mill runs 24 hours per day, 7 days per week. The mill treats the tailings of Mill 71, which are brought by a launder and fed to four No. 1 hydraulic classifiers, each with one spigot, which yield spigot products to waste and overflow products distributed by twenty-four launders to twenty-four canvas tables in two rows of twelve each (see Fig. 401*a*). On each side of the mill is a launder leading to two spare canvas tables, to which the feed of any two tables in the mill can be shunted while they are being hosed off. The above twenty-six tables yield tailings which are waste and heads which are hosed off every hour and go to No. 1 whole current box classifier. The first two feet of this classifier yield a coarser product than the remainder. The settlings are shoveled out and wheeled to the vanner, the coarse and fine being treated separately, while the overflow of the classifier goes to three canvas tables in series two of which are always running and the third is spare. When the first is being hosed the second and third are running; when the second is being hosed the first and third are running, and when the third is hosed the first and second are running. These three tables yield heads to No. 2 whole current box classifier and tailings to waste. The settlings are shoveled from No. 2 box classifier and wheeled to the vanner, while the overflow is waste. There is one vanner in the mill which is of the steep slope end shake type, 4 feet wide. It treats the settlings from Nos. 1, 2 and 3 whole current box classifiers each by itself and yields heads which are settled in a little catch box and go to smelter, and tailings, which, together with the overflow of the catch box, go to three canvas tables arranged just like the three tables treating the overflow of No. 1 whole current classifier. These three tables yield tailings to waste and heads hosed off to No. 3 whole current classifier. The settlings in this classifier go also to the vanner and the overflow is waste.

The labor required is three men per 24 hours, two by day and one by night. The vanner is run only in the day time.

Power for running the vanner is obtained from an overshot water wheel, 9 feet diameter, 12 inches wide, driven by the tailings of the twenty-six tables.

Water comes with the tailings from Mill 71, the amount being 12 miner's inches (about 130 gallons per minute). In addition, 3 inches are required in the hydraulic classifiers and 1 inch in hosing off the canvas tables.

The amount and value per ton of various materials in this mill are as follows: Feed to mill, 100 tons in 24 hours, worth $1 per ton; spigots of hydraulic classifiers, 70 tons in 24 hours, worth $0.57 per ton; overflows of hydraulic classifiers, 30 tons in 24 hours, worth $2 per ton; final tailings of canvas tables, 29½ tons in 24 hours, worth $0.34 per ton; feed to vanner, about 2 tons in 24 hours, worth $30 per ton; vanner heads, 1,000 pounds in 24 hours, worth $100 per ton.

The mill saves about 50% of the gold.

§ 753. MILL NO. 79. CANVAS PLANT OF THE KEYSTONE CONSOLIDATED MINING COMPANY, AMADOR CITY, CALIFORNIA.—Capacity about 119 tons per 24 hours. The mill runs 24 hours per day, 7 days per week. The material treated is the tailings of Mill 72 after they have passed through Nos. 6, 7 and 8 mercury traps. The stuff is first distributed by a rough form of classifier to thirteen parallel riffle boxes, the center boxes receiving coarse material and

the end boxes fine. The heads caught by the riffles are cleaned out every 24 hours and go to the first compartment of No. 1 settling tank; the tailings of the coarse boxes are distributed by a rough form of classifier to sixteen canvas tables; the tailings of the fine boxes are distributed by two more rough classifiers to forty-six canvas tables arranged in two rows of twenty-three each, one classifier feeding each row. The tailings of all the canvas tables run to waste; the heads are cleaned off every hour and go to the second compartment of No. 1 settling tank. This tank has six compartments, and the first compartment overflows to the second, the second to the third and so on; the settlings in the first compartment go to chlorination works, while the settlings in the remaining compartments go to a Woodbury end shake vanner, which yields heads to chlorination works and tailings to waste.

The labor required is two men per 24 hours, divided into two shifts.

The stuff coming to the mill assays 0.044 ounce gold per ton; the concentrates from the riffle boxes assay 5.15 ounces gold per ton and amount to 7 tons per month. The heads of the vanner assay 5 ounces gold per ton and amount to 10 tons per month. The tailings which go to waste assay 0.02 ounce gold per ton. Based on the above figures, the stuff coming to the mill being 119.5 tons in 24 hours, the tailings of the riffle boxes (fed to 62 canvas tables) would be 119.3 tons in 24 hours, and the final mill tailings would be 118.9 tons in 24 hours. This mill alone saves about 55% of the gold by concentration and loses about 45% in the tailings. Mills 72 and 79 taken together save about 83% of the gold by amalgamation and 16% by concentration and lose about 1% in the tailings.

§ 754. MILL NO. 80. UTICA-STICKLES CANVAS PLANT, ANGELS CAMP, CALAVERAS COUNTY, CALIFORNIA.—Capacity about 410 tons per day. The mill runs 24 hours per day, 7 days per week. The material treated is the tailings of Mills 73 and 74. It comes in a receiving launder, which divides into three launders. Each of the three launders then divides into two, making six in all, and three of these supply the nearer side of the mill, while the other three bridge over and supply the farther side. Each of these six launders is further divided into five radiating launders, terminating in distributing tanks, thirty in all. Each distributing tank has three spigots, and each spigot feeds one canvas table, making ninety tables in all. The tables are arranged in two banks sloping from right and left toward the three center launders, two of which are for tailings and one (called No. 1 settling tank) is for heads. The tailings of the tables go to waste, while the heads are removed every two hours and caught in No. 1 settling tank. This overflows to No. 2 settling tank, and the overflow of No. 2 settling tank goes to waste. The settlings in both No. 1 and No. 2 settling tanks are shoveled out and sent to the cyanide plant. The waste tailings of the mill go to Mill 81.

The labor required is six men per 24 hours, divided into two shifts. Wages are $1.50 per day. The material coming to the mill assays 0.03 ounce gold per ton. The concentrates from No. 1 settling tank (3,000 pounds per 24 hours) assay 2.25 ounces gold per ton, and those from No. 2 settling tank (238 pounds per 24 hours) assay 3.0 ounces per ton. The tailings assay 0.021 ounce gold per ton. 100 tons of material coming to the mill yield 0.39 ton of concentrates and 99.6 tons of tailings. The mill saves about 30% of the gold.

This mill has since been remodelled after the plan of Mill 78.

(q) GOLD MILL WITH GRAVITY STAMPS AND CANVAS TABLES.

§ 755. A mill using gravity stamps, trommel and canvas tables has been used in the Cripple Creek district of Colorado. Each table once an hour was shunted out, flowed with clear water to remove excess of quartz, and hosed off to save the pyrite and telluride of gold. The coarse oversize of the trommel was sent back to the

stamps when it appeared worth while. This mill appeals for a place by its extreme simplicity and its use of apparatus of final resort as its main means of saving the values. The saving is not high, due to the fact that the coarser grains require different conditions on the canvas table from the very fine slimes.

(*r*) THE ARRASTRA.

§ 756. Mill 81, which is the only mill in this group, is a tributer's mill, such as occurs in a number of districts in California, being used to re-treat the tailings of gold stamp mills. The catch is probably from gold particles included in the quartz and perhaps also in a little of the flattish auriferous pyrite, which has escaped the vanners and canvas tables. In some cases arrastras are used upon the ore as it comes from the mine.

§ 757. MILL NO. 81. STEPHEN LAVAGNINO'S ARRASTRAS, ANGELS CAMP, CALIFORNIA.—Capacity 18 to 20 tons per 24 hours. The mill runs 24 hours per day, 7 days per week. The material treated is tailings from Mill 80, which, with added water from Mill 65, come down by a ditch two miles to this mill. The plant consists of a system of small settling tanks for stopping the material by the side of the arrastras, and four arrastras. The overflows of the settling tanks are waste. The arrastras (see § 205) each treat a charge of 4½ to 5 tons in 24 hours. A little spoonful of mercury, 25 pounds of lime, and one pound of blue stone are fed each day per arrastra, the total cost of these chemicals being $0.60. Every day the finely ground charge is flushed out to waste and a new charge shoveled in from the settling tanks. About every three months the arrastras are cleaned out for the accumulated amalgam.

At one clean up three arrastras yielded 13 pounds of amalgam worth $75 per pound. Three strong men working 13 or 14 hours per day can run four arrastras. The arrastras are driven by water power. The material coming to this mill assays about 0.02 ounce gold per ton. In the settling tanks it is probably concentrated up to about 0.062 ounce per ton. The arrastras save about 0.03 to 0.035 ounce gold from each ton treated although sometimes it goes as low as 0.02 ounce.

(*s*) SILVER MILLS WET OR DRY.

§ 758. *The wet silver mill or Washoe process* is in two forms. One is called the tank mill and uses breakers, gravity stamps, settling tanks, amalgamating pans for grinding, chemical treatment and amalgamation, settlers and agitators. The other is called, from its inventor, the Boss continuous system of amalgamation and uses breaker, gravity stamps, pans for grinding, pans for chemical treatment and amalgamation, settlers and agitators. They both use one or more of the following chemicals as needed, adding them in the order called for: mercury, the iron of the pan, cupric sulphate (blue stone), sodium chloride (common salt), sulphuric acid, soda ash, quick lime (burnt lime).

The dry silver mill or Reese River process roasts the ore with salt and then amalgamates in amalgamating pans. It uses breaker, dry gravity stamps, conveyor, roasting furnace, cooling floor, pans, settlers and agitators. Mercury and the iron of the pan are the only chemicals used other than those in the roasted ore.

The two processes, on account of the chemical reactions used in them, are treated in the books on metallurgy and the reader is referred for descriptions of them to King,[26] Schnabel,[44] Egleston,[18] Eissler[15] and Phillips.[38]

(*t*) SILVER COMBINATION MILLS COMBINING GOLD MILLS AND WET SILVER MILLS OR WASHOE PROCESS.

§ 759. This group includes Mills 82, 83 and 84. The treatment takes out the free gold as amalgam on amalgamated plates, and the rusty gold and sulphides of the valuable metals as concentrates of the vanners. The included grains and fine

slimed sulphides then yield silver and gold to amalgam in the pans of the Washoe process. The settlers, agitators, etc., extract this amalgam. The amount of gold caught by amalgamated plates in Mill 83 would be small and so they are not used, but in Mills 82 and 84 they are thought to save enough to pay for their use, although even in these two mills if plates were not used the gold would still be caught, either on the vanners or in the amalgamating pans.

The advantages of this process over the wet and dry silver mill are thus stated by Mr. Arthur Buckbee, based on experience in the Tintic district, Utah. Wet stamps crush one and one-half to two times as fast as dry. The dry silver mill extracts one-tenth more silver than the wet, but adds the cost of roasting. The combination mill saves the lead which is lost in the other two processes, and by the concentration largely prevents lead and arsenic from fouling the mercury and interfering with the amalgamation.

§ 760. MILL NO. 82. MONTANA MINING COMPANY, LIMITED, MARYSVILLE, MONTANA. COMBINATION MILL.—Capacity 110 tons per 24 hours. The mill runs 24 hours per day, 7 days per week. The description of the ore has been already given under Mill 68. The ore is brought in cars holding one ton and dumped upon (1).

1. Two No. 1 grizzlies with 1½-inch spaces. Oversize is hand picked into rich ore to smelter and residue to (2); undersize to (3).

2. Two No. 1 Blake breakers, 9 × 15 inches, crushing to 1½ inches. To (3).

3. From (1) and (2). Ore bin 91 feet long, 14 feet wide, and 13 feet deep with bottom sloping 45° and holding 500 tons. By ten chutes and ten Hendy feeders to (4).

4. Fifty gravity stamps arranged in ten batteries using screens with 0.52-mm. square holes and having mercury fed to the mortar. Pulp to (5); at periodical clean up, amalgam to be retorted, scrap iron to waste and sulphurets to smelter.

5. Ten amalgamated plates or apron plates. Pulp to (6); amalgam removed daily, cleaned into hand pan, strained and retorted.

6. Two launders, one for six batteries and one for four batteries, provided with Howland riffles. Pulp by two bucket elevators and distributing launders to (7); heavy sand and amalgam removed every three days to (13).

7. Twenty 4-foot Frue vanners with amalgamated plates on their distributors. Heads to smelter; tailings to (8); amalgam removed from plates weekly and retorted.

8. Eighty settling tanks arranged in two sets of forty each, one set for twelve vanners, and one set for eight vanners. Each set consists of eleven No. 1 tanks in series followed by twenty-eight No. 2 tanks in series and one No. 3 tank. Settlings in No. 1 and No. 2 tanks are shoveled out, wheeled to a feeding floor, and thence to (9); settlings in No. 3 tanks flushed out to (9); a portion of the water in No. 3 tank is pumped back to the stamp mortars (4); overflow of No. 3 tanks to waste.

9. From (8), (11) and (12). Twenty-four amalgamating pans, 5-foot combination pans, using mercury and chemicals. The charge is one ton per pan and the time of treatment of a charge is four hours, one-half the pans being discharged every two hours to (10); heavy sand cleaned out occasionally to (13).

10. Twelve settlers. Time of treatment of a charge is two hours. Amalgam to (14); pulp to (11).

11. Five agitators. Heavy sand cleaned out every twelve hours to (9); overflow continuously to (12).

12. One wheel agitator. Heavy sand cleaned out periodically to (9); light sand and water to waste.

13. From (6) and (9). A clean up pan. Amalgam to (14); sulphurets to smelter.

14. From (10) and (13). Four amalgam strainers and safes. Amalgam by car to retort to be retorted and melted; mercury used over in the mill.

The labor required in this mill is 39 men per 24 hours: 2 foremen, 2 engineers, 3 firemen, 3 breaker men, 5 battery men, 2 plate men, 4 vanner men, 4 pan men, 2 pan helpers, 10 tank men and 2 agitator men. The breaker men, battery men and firemen work 8-hour shifts and the rest of the men work 12-hour shifts. Wages vary from $3 per day for a laborer to $4 or $4.50 for a mechanic. Board costs $1 per day and wood is $3.80 per cord. Power is furnished by a poppet valve high pressure engine which gives 200 indicated horse power. The boilers require ten cords of wood per 24 hours.

The water required is 175.4 gallons per minute divided as follows: boilers, 11 gallons; 30 side pans for live steam, 2.4 gallons; 20 side pans for live steam, 2 gallons; stamps, 100 gallons; vanners, 20 gallons; settlers, 40 gallons.

The ore assays from 0.25 to 0.50 ounce gold and 10 to 15 ounces silver per ton; the smelting ore picked out by hand at the grizzly (from 0 to 10 tons per month) assays 2.5 to 8.3 ounces gold and 77 to 258 ounces silver per ton; the vanner concentrates assay 8.3 ounces gold and 258 ounces silver per ton; the tailings assay 0.075 ounce gold and 4 to 5 ounces silver per ton. The bullion from the plates is 500 to 600 fine in gold and 400 to 500 fine in silver; that from the settlers is 15 fine in gold and 750 fine in silver. One hundred tons of ore yield from ¾ to 1 ton of concentrates and about 99 tons of tailings; and also 55 to 73 ounces of bullion from the apron plates, 4 to 5 ounces from the plates on the vanners and 600 ounces from the settlers. Of the gold 60% is saved by the amalgamated plates, 15% by the amalgamating pans and 13% by the vanners, and 12% is lost in the tailings. Of the silver 2% is saved by the plates, 38% by the pans and 22% by the vanners, and 37% is lost in the tailings. The loss of mercury is about ½ pound per ton of ore.

The waste tailings of this mill are now caught in settling ponds and cyanided (see end of Mill 68).

This mill was originally designed as a dry crushing silver mill using the Reese River process. Before completion it was found that the Washoe process of wet stamping was more suitable, and the plates and settling tanks were installed in a cramped space between the stamps and the pans, and the tank accommodation is therefore entirely inadequate. Later it was found that the combination process was the best process but as there was no room for vanners in their proper position between the plates and the settling tanks, they had to be placed elsewhere, some on the old drying floor back of the stamps and some in an additional building outside, and it was necessary to install elevators to lift the pulp from the plates to the vanners. This arrangement complicates the whole mill, necessitates the employment of additional men, and adds considerably to the expense.

§ 761. MILL NO. 83. EUREKA HILL MINING COMPANY, EUREKA, TINTIC DISTRICT, UTAH.—Capacity 120 tons per 24 hours. The mill runs 24 hours per day, 7 days per week. The ore is oxidized ore and consists of the economic minerals native silver, cerargyrite, galena, cerrusite, anglesite, malachite, azurite, chrysocolla, and arsenite and arseniate of copper, and a gangue of quartz, calcite, siderite, and rhodocrosite. The problem is to save the gold and silver and to remove arsenic and manganese previous to amalgamation since the former sickens the mercury and the latter neutralizes the effect of the chemicals in the amalgamating pans. The ore is divided into two classes: (*a*) rich ore which goes to the smelter, and (*b*) concentrating ore which is brought in cars, holding one ton, up the side of the hill by an inclined hoist 700 feet long, with 22° slope, and dumped into two hoppers, each 10 × 7 feet, and 3 feet deep. These hoppers deliver to two Comet breakers, size D, crushing to 1 or 1½ inches, and the crushed ore goes to two mill bins, each 46 feet long, 18 feet wide and 18 feet deep in front,

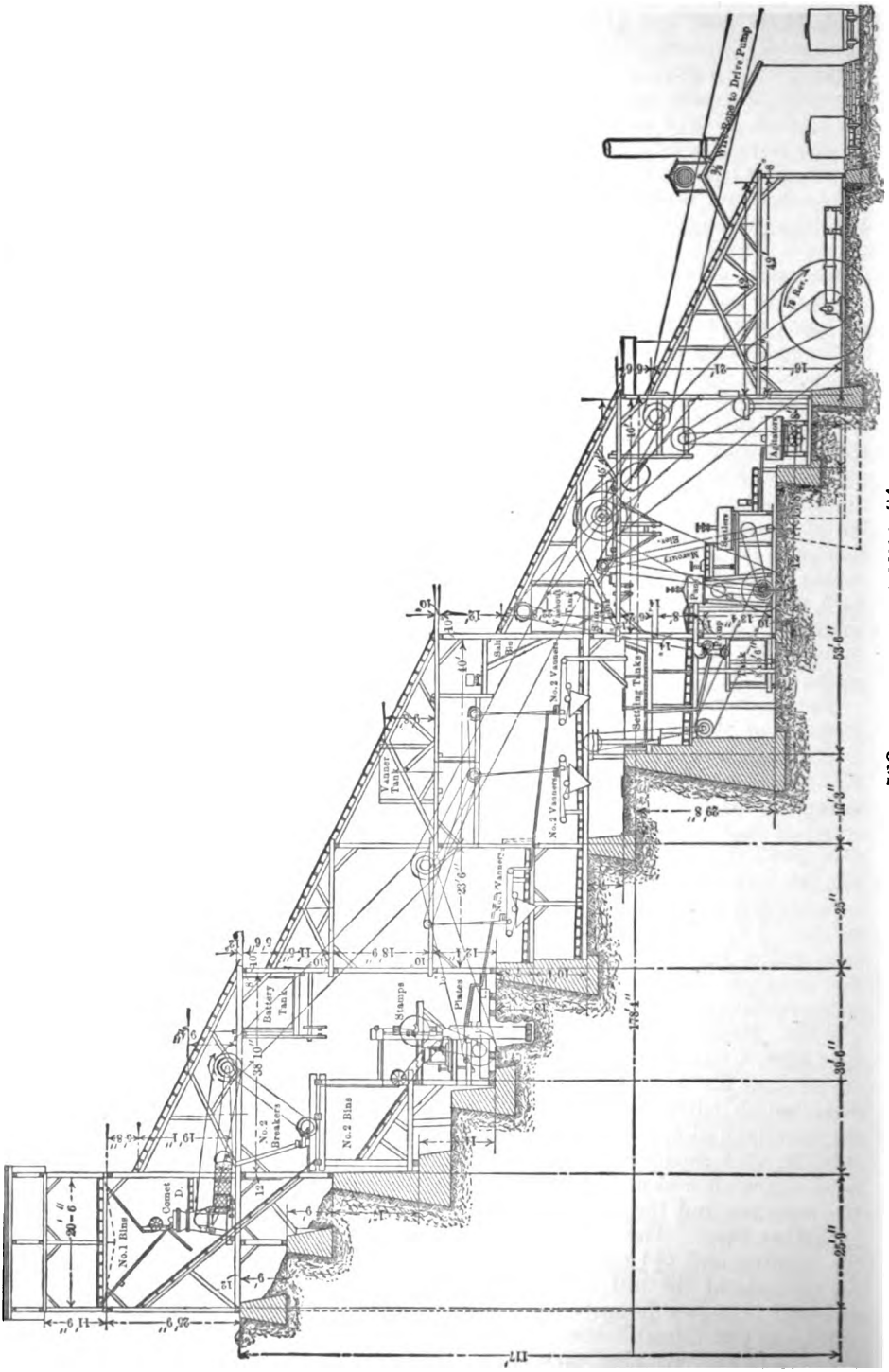
To Wire Rope to Drive Pump
To Rock
No.1 Bins
Comet D.
No.2 Dressers
Battery Tank
No.2 Bins
Stamps
Plates
Tanner Tank
No.3 Vanners
No.2 Vanners
No.1 Vanners
Settling Tanks
Sand Bin
Sand Pump
Classifier
Adjuster
Blower
Engine
Boiler
Hoist
Hoist
Hoist

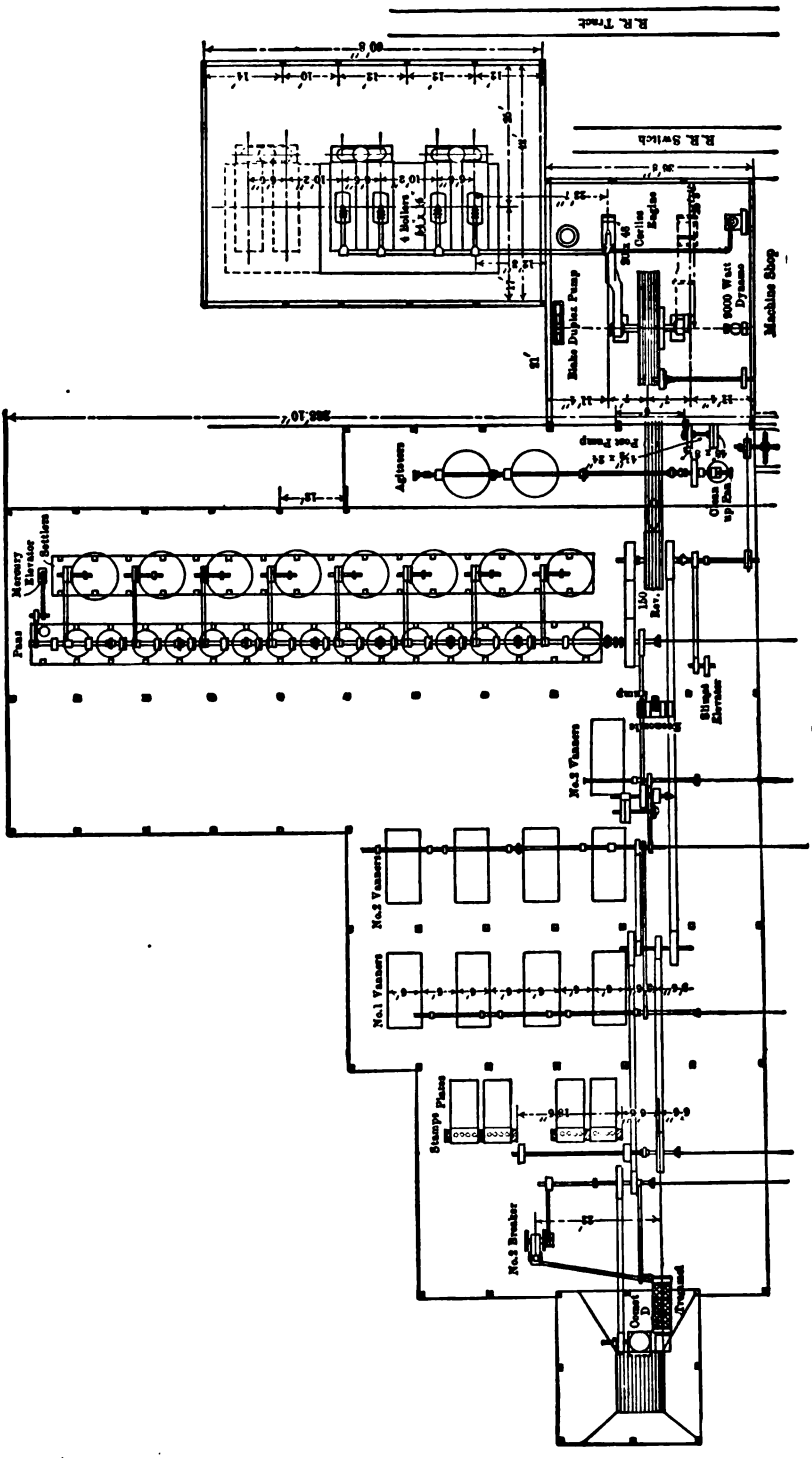

FIG. 522b.—PLAN.

with bottom sloping 45°. The ore is discharged through twelve gates and chutes to twelve Hendy feeders and thence to sixty gravity stamps arranged in twelve batteries, using screens with 0.42-mm. square holes and having no mercury fed to the mortars. The pulp from forty stamps goes to eight No. 1 6-foot Frue vanners and that from the other twenty stamps is evenly distributed among sixteen No. 2 6-foot Frue vanners. The heads of both No. 1 and No. 2 vanners are shipped to smelter; the tailings of No. 1 vanners are evenly distributed among the sixteen No. 2 vanners, and the tailings of No. 2 vanners go to sixty-nine settling tanks. The overflow water of these tanks is pumped back to be used over again in the stamps and on the vanners; the settlings are either shoveled or flushed out to twenty-four amalgamating pans, 5-foot combination pans, using mercury and chemicals. The charge of sand is 1¼ tons per pan and the time of treatment is eight hours. Half of the pans are discharged every four hours to the settlers. The pans are cleaned out twice a month yielding amalgam to a clean up pan. There are twelve settlers and the time of treatment in each is four hours. They yield amalgam to strainers and pulp to four agitators which in turn yield a little amalgam to the strainers when the settlers are not working perfectly. The sand and water overflow continuously from the agitators to the pond from which the water is pumped back to a tank to be used over again in the settlers. There are two clean up pans in the mill which treat the amalgam cleaned out from the amalgamating pans and they yield amalgam to the strainers and pulp which goes to the above mentioned settlers. There are six strainers and safes to receive the amalgam from the settlers, agitators and clean up pans. They yield hard amalgam to be retorted and melted and mercury to be cleaned and used over in the mill. The melted bullion is shipped to a lead refinery.

The mill employs 33 men per 24 hours: 1 superintendent, 2 foremen, 2 engineers, 2 firemen, 2 breaker men, 3 battery men, 3 vanner men, 3 pan men, and 15 others. Wages vary from $2 or $2.50 per day for laborers to $2.50 or $3.50 per day for mechanics. Board costs $22.50 per month, and coal is $3 per ton.

The power is supplied by a Fraser & Chalmers compound Corliss engine with a receiver but no condenser, with high pressure cylinder 20 × 48 inches, cutting off at ½ stroke, and low pressure cylinder 32 × 48 inches. Steam at 125 pounds pressure per square inch is generated by six fire tube steel boilers, 54 inches diameter, 16 feet long, with 44 tubes 3½ inches diameter. The mill burns 11½ tons of coal per 24 hours.

Water is pumped from Homansville, 3 miles distant, with an expenditure of two tons of coal per day, through a 6-inch pipe and up 400 feet to a store tank with a capacity of 600,000 gallons, placed at the top of the mill. The mill requires about 60,000 gallons of fresh water per 24 hours for the entire work, in addition to what is obtained by repumping from the settling tanks and the settling pond. Of the total fresh water delivered to the mill, 28% is used for making steam and 72% is used in actual milling.

The ore assays 0.10 to 0.25 ounce gold and 17 ounces silver per ton. A chemical analysis showed it to also contain: silica (SiO_2) 75%, copper 1%, lead 2%, antimony (Sb) 0.5%, arsenic (As) 0.5%, aluminum (Al) 2%, manganese (Mn) 1%, iron (Fe) 1%, lime (CaO) 7.8%, sulphur (S) 2%, carbon dioxide (CO_2) 6.2%. A set of assays of samples all taken on the same day gave the following: pulp from the stamps contained 0.08 ounce gold and 20.5 ounces silver per ton, 1% lead and 1% copper; the heads of No. 1 vanners contained 0.29 ounce gold and 82.4 ounces silver per ton, 33% lead and 3% copper; the tailings of No. 2 vanners contained 12.5 ounces silver per ton and 0.5% copper; the pulp leaving the settlers contained 5.1 ounces silver per ton. One hundred tons of ore yield 10 tons of concentrates and 90 tons of tailings. The mill saves about 40% of the silver by concentration and 40% by amalgamation and loses 20% in the tailings.

In this mill as well as in the next one, notice that the tailings of one set of Frue vanners are further treated on a second set. This mill has recently been enlarged so that it contains 100 stamps, 50 Frue vanners, 32 amalgamating pans, and 16 settlers.

§ 762. MILL No. 84. MAMMOTH MINING COMPANY, MAMMOTH, TINTIC DISTRICT, UTAH.—Figs. 522*a* and 522*b* show this mill when twenty stamps had been installed.—Capacity 100 tons per 24 hours. The mill runs 24 hours per day, 7 days per week. The ore is oxidized and consists of the economic minerals native silver, cerargyrite, argentite, argentiferous barite, malachite, and arsenite and arseniate of copper, and a gangue of quartz and calcite. The problem is to save the silver and the accompanying gold and incidentally the lead and copper. Some rich ore is shipped direct to the smelter. The concentrating ore is brought one mile in bottom discharge wagons and dumped through a hatchway upon a grizzly with 1½-inch spaces. The undersize goes direct to the No. 2 or stamp bins while the oversize goes to No. 1 bin which is 20 feet long, 14 feet wide, and 12 feet deep on the front side, with bottom sloping 40°, and holding 80 tons. This discharges by rack and pinion gate to No. 1 breaker, a Comet, size D, crushing to 3 inches, the product of which goes to a trommel with 1-inch round holes. The undersize of this passes direct to No. 2 bins; the oversize passes through two No. 2 Blake breakers, 9 × 15 inches, crushing to 1½ inches, and thence by two horizontal rubber belt conveyors to the No. 2 bins, the stuff being delivered to any desired part by means of an oblique scraper. There are two of the No. 2 or stamp bins, each 29½ feet long, 18 feet deep in front and 14 feet wide, with bottom sloping 40°. They deliver the ore by gates and chutes through eight Hendy feeders to forty gravity stamps arranged in eight batteries, using screens with 0.41-mm. square holes and having no mercury fed to the mortar. The mortars are cleaned out monthly to remove scraps of iron which go to waste. The pulp issuing from the mortars passes over eight sets of amalgamated plates and mercury traps each arranged as follows: a transverse distributing trough, an apron plate, No. 1 mercury trap. Amalgam is removed daily from the plates and is retorted. The mercury traps are cleaned out periodically and the heavy sand and amalgam sent to a clean up pan. The pulp after passing over the mercury trap runs to eight No. 1 6-foot Frue vanners the heads of which go to smelter and the tailings go to sixteen No. 2 6-foot Frue vanners. The heads of these also go to smelter and the tailings go to thirty settling tanks. There is one spare 7-belt Woodbury vanner which may be used as a No. 1 vanner. The launders are also arranged so that if a No. 1 vanner is out of order the pulp can go to the corresponding two No. 2 vanners. The thirty settling tanks are arranged in series and the settlings are dumped through the bottom into amalgamating pans while the overflow is lifted by a plunger pump back to be used over again in the stamps. There are twenty amalgamating pans, 5-foot combination pans, using mercury and chemicals. The charge of ore is 1¼ tons and the time of treatment is six hours, one-half the pans being discharged every three hours to the settlers. The pans are cleaned out once a month and the heavy sand and amalgam sent to the clean up pans. There are ten settlers which treat a charge in three hours and yield amalgam to strainers and pulp to two agitators. A small amount of amalgam is obtained from these agitators and goes to the strainers; the sand and water overflow continuously from the agitators and run to a settling pond from which the water is pumped back to be used over again in the pans and settlers. These tailings from the agitators have been run over blanket tables. One strainer and amalgam safe receives the amalgam from the settlers and agitators, and yields hard amalgam to be retorted and quicksilver to be used over in the mill. The clean up pan which treats stuff from the mercury traps and amalgamating pans grinds a charge in two hours and discharges it to the settlers.

The labor required is 31 men per 24 hours: 2 engineers, 2 firemen, 1 breaker man, 3 battery men, 5 vanner men, 2 pan men, and 16 others. Wages vary from $2 or $2.50 per day for laborers to $3 or $4 for mechanics. Board costs $25 per month. Coal costs $2.75 per ton and wood $1.60 per cord.

Water is pumped 18 miles and up 400 feet through an 8-inch cast iron pipe by a Tappan pump requiring an expenditure of two cords of wood per 24 hours. The amount is 70,000 gallons in 24 hours, and in addition 30,000 gallons are repumped from the settling tanks and settling pond, making the total amount of water used by the mill 100,000 gallons per 24 hours. Of this amount nearly 58,000 gallons are used by the stamps.

Power is furnished by a Fraser & Chalmers compound Corliss engine rated at 280 horse power. The low pressure cylinder has not been added and it actually indicates 212 horse power. There are four fire tube boilers, 16 feet long, 56 inches diameter, with 50 tubes 3½ inches in diameter, running under a steam pressure of 125 pounds per square inch. Only three are run at a time and they burn eight tons of coal per 24 hours.

The shipping ore assays 2 to 5 ounces gold and 10 to 200 ounces silver per ton, and 20 to 60% lead. The concentrating ore assays 0.25 to 0.60 ounce gold and 6 to 12 ounces silver per ton. The concentrates assay 1.5 to 2.5 ounces gold, and 25 to 50 ounces silver per ton, and 5 to 7% lead. The tailings assay 0.082 to 0.125 ounce gold and 2 to 4 ounces silver per ton. The bullion is 50 to 500 fine in gold and 400 to 850 fine in silver. One hundred tons of concentrating ore yield 4 to 8 tons of concentrates from No. 1 vanners, 2 to 4 tons from No. 2 vanners and 88 to 94 tons of tailings. In addition there are from 2 to 20 tons of shipping ore for every 100 tons of concentrating ore. The amount of bullion ranges from 10,000 to 12,000 ounces per month. Of the gold 22% is saved on the amalgamated plates, 28% in the vanner concentrates, and 32% in the amalgamating pans, and 18% is lost in the tailings. The corresponding figures for silver are 3%, 32%, 35% and 30% respectively. Of the lead and copper 85% is saved in the vanner concentrates and 15% is lost in the tailings.

This mill has been increased to 60 stamps and 36 vanners and other machinery to correspond. The use of graded crushing in this mill by two sets of rock breakers with a trommel between is rather unusual. The advantage probably is that hand sledging of the large lumps is not necessary.

(*u*) GOLD COMBINATION MILLS COMBINING COMPLEX JIGGING MILLS AND GOLD MILLS.

§ 763. This group includes Mills 85 to 88 inclusive. They use breaker, rolls, screens, classifiers, jigs and tables in the first part, and gravity stamps, amalgamated plates, and vanners or tables in the last part. The last part treats the jig tailings from the first part. Mill 85 uses Gilpin County concentrators in both parts. Mill 86 uses Gilpin County concentrator, vanner and slime table in the first part, Huntington mill to replace stamps and Gilpin County concentrators in the second part. Mill 87 uses vanners in the second part, and Mill 88 has Gilpin County concentrators and a vanner in the second part.

Besides the mills described in this class the Silver Lake Mill of Silverton, Colorado, is also a leading mill of the kind. This class of mills is suited to ores which carry, in addition to free gold, a considerable percentage of concentrates in fairly coarse crystallization.

Mill 86 is representative of the system of coarse crushing and concentration followed by amalgamation on Gilpin County ore in comparison with the system of fine stamping and amalgamation followed by concentration which is represented by Mill 77. Much discussion has occurred over the relative merits of the two

systems. The best opinion seems to be that each has a sphere of its own depending on the nature of the ore, the percentage of sulphides in the ore, and the ruling smelting charges.

The Gilpin County ores as a rule have the pyrite in quite coarse crystallization and the gold is contained in the pyrite so that one would naturally consider it a concentrating ore. When this district was developed, however, there was no market for low grade concentrates and consequently fine crushing and amalgamation was the only system that could be used. Later when concentrates could be sold concentrators were put into the mills and thus originated the scheme illustrated by Mill 77. This system is of low cost and where the percentage of sulphides is not so high as to cause a considerable loss by sliming it gives a fairly good extraction so that the net return per ton of ore is greater than with any other process. An illustration of how the loss increases as the percentage of sulphides increases is given by Argall,[99] who states that a lot of ore containing 95% pyrite and assaying 1.06 ounces gold and 1.74 ounces silver per ton, was put through a mill similar to Mill 77 and 50% of the pyrite was lost in the tailings as slime and this contained 25% of the gold and 49% of the silver. Amalgamation saved 35% of the gold and 6% of the silver and concentration saved 40% of the gold and 45% of the silver. The process illustrated by Mill 86 is more costly but it does not produce so many slimes and the total saving is higher than in Mill 77 especially where the ores have a high percentage of sulphides (over 15%) or where the ore is refractory to amalgamation, particularly ores containing tetrahedrite.

Two other arguments are used. The first is that it is of no benefit to use amalgamation previous to concentration, for the gold would all be saved by concentration alone. This is not always true however, as is shown by the following instance[379] from another district. At Mount Shasta, California, a gold ore containing its value in sulphides of iron, zinc, copper and lead was crushed in a Tustin mill to 40 mesh and concentrated, resulting in a saving of 90 to 94% of the gold. An amalgamated plate was then placed between the Tustin mill and the concentrator and saved a lot of free gold bringing up the total saving to 95 or 96%. The second argument is that the net saving to the miner is greater if he stamps fine and saves all he can in amalgam and that the net loss to him due to loss in fine slimes is less than if he saved a larger percentage of the gold in concentrates which were greater in amount and then had to pay out all he had gained and perhaps more in paying freight and smelting charges.

It seems, then, to be a question entirely of the ledger to determine whether the percentage of sulphides and other conditions are such that the greater extraction of the coarse crushing, concentrating, and amalgamating scheme of Mill 86 will or will not pay for its increased cost over the fine stamping, amalgamating and concentrating scheme of Mill 77.

§ 764. MILL NO. 85. NEWTON JIGGING MILL, IDAHO SPRINGS, COLORADO.—The description of the ore has been already given under Mill 70. The ore is brought in two-horse wagons and shoveled to (1).

1. A bin 50 feet long, 12 feet wide, and 8 feet deep. By shovel or wheelbarrow to (2).

2. One Blake breaker, 7 × 9 inches, crushing to 1¼ inches. To (3).

3. From (2) and (5). One No. 1 bucket elevator. To (4).

4. One No. 1 trommel with 4-mesh square holes. Oversize to (5); undersize to (6).

5. One pair of No. 1 rolls, 20 × 16 inches. To (3).

6. From (4). One No. 2 trommel with 8-mesh square holes. Oversize to (10); undersize to (7).

7. One No. 3 trommel with 12-mesh square holes. Oversize to (11); undersize to (8).

8. One No. 1 hydraulic classifier with one spigot. Spigot to (12); overflow to (9).

9. One No. 1 surface current box classifier with one spigot. Spigot to (13); overflow to (22).

10. From (6). Two No. 1 jigs. 2-sieve Harz jigs. Skimmings and hutches to (21); tailings to (14).

11. From (7). One No. 2 jig. 3-sieve Harz jig. Hutches to (21); tailings to (14).

12. From (8). One No. 3 jig. 3-sieve Harz jig. Products like (11).

13. From (9). One No. 1 double Gilpin County concentrator. Heads to (21); tailings to (22).

14. From (10), (11) and (12). One No. 1 unwatering box with one spigot. Spigot to (15); overflow to (22).

15. Ten gravity stamps arranged in two batteries and having mercury fed to the mortars. Pulp to (16); mortars cleaned out fortnightly for amalgam.

16. Two amalgamated plates. Pulp from one plate to (17); pulp from the other plate to (19); amalgam removed periodically and retorted.

17. One No. 1 mercury trap. Pulp to (18); heavy sand and amalgam removed periodically and the amalgam panned out and retorted.

18. One No. 2 double Gilpin County concentrator. Heads to (21); tailings to (22).

19. From (16). One No. 2 hydraulic classifier with two spigots. Each spigot to one half of (20); overflow to (22).

20. One No. 3 double Gilpin County concentrator. Heads to (21); tailings to (22).

21. From (10), (11), (12), (13), (18), (20). The concentrates are caught in boxes, loaded in bulk into railroad cars and shipped to smelter.

22. From (9), (13), (14), (18), (19), (20). Tailings launder to waste.

§ 765. MILL No. 86. ROCKY MOUNTAIN MILL, BLACKHAWK, GILPIN COUNTY, COLORADO.—Capacity 75 tons in 24 hours. The mill runs 24 hours per day, 6 days per week. The ore consists of the gold and silver bearing economic minerals pyrite, chalcopyrite, blende and galena, and a gangue of quartz and disintegrated granite. The problem is to save the gold and silver. The ore is brought in cars holding 10 tons, 10 cars to a train, or by 4-horse wagons, weighed and dumped into (1).

1. Six receiving bins, each holding 20 tons. By shovel to (2).

2. One No. 1 Blake breaker, 7 × 10 inches, crushing to 1 inch. To (3).

3. One pair of No. 1 rolls, 30 × 14 inches, set ½ inch apart. To (4).

4. From (3) and (6). One No. 1 bucket elevator, to (5).

5. One No. 1 trommel with 9-mm. round holes. Oversize to (6); undersize to (7).

6. One pair of No. 2 rolls, 30 × 14 inches, set close together. To (4).

7. From (5). A Collins sampler. Sample (about 1% of total) is sampled down further by the assayer; remainder to (8).

8. One No. 2 trommel with 6½-mm. round holes. Oversize to (14); undersize to (9).

9. One No. 3 trommel with 3-mm. round holes. Oversize to (16); undersize to (10).

10. One No. 4 trommel with 1¼-mm. round holes. Oversize to (18); undersize to (11).

11. One No. 1 hydraulic classifier with one spigot. Spigot to (21); overflow to (12).

12. One No. 2 hydraulic classifier with one spigot. Spigot to (23); overflow to (13).

13. One No. 1 unwatering box. Spigot to (24); overflow (if any) to (38).

14. From (8). One No. 1 jig. 3-sieve Harz jig. 1st and 2d discharges probably to (39); 3d probably to (20); 1st and 2d hutches to (39); 3d to (20); tailings to (15).

15. No. 1 unwatering sieve of 10-mesh wire cloth. Oversize to (25); undersize (water) to (38).

16. From (9). Two No. 2 jigs. 3-sieve Harz jigs. 1st and 2d discharges probably to (39); 3d probably to (20); 1st and 2d hutches to (39); 3d to (20); tailings to (17).

17. No. 2 unwatering sieve of 16-mesh wire cloth. Oversize to (25); undersize (water) to (38).

18. From (10). Two No. 3 jigs. 3-sieve Harz jigs. 1st and 2d hutches to (39); 3d to (20); tailings to (19).

19. No. 3 unwatering sieve. Oversize to (25); undersize (water) to (38).

20. From (14), (16), (18), (28). A cleaning jig run intermittently on the different materials. Concentrates to (39); tailings to (25).

21. From (11). One No. 1 double Gilpin County concentrator. Heads to (39); tailings to (22).

22. One No. 2 double Gilpin County concentrator having an inclined 40-mesh screen attached to and bumping with the table. Oversize of screen to (25); undersize to the table; heads of table to (39); tailings to (40).

23. From (12). One 4-foot Frue vanner. Heads to (39); tailings to (40).

24. From (13), (36). One convex revolving slime table. Heads to (39); middlings returned to the table; tailings to (40).

25. From (15), (17), (19), (20), (22), (28). One No. 2 bucket elevator. To (26).

26. One 5-foot Huntington mill using screen with 0.43 × 9.5-mm. slots.* To (27).

27. One No. 5 trommel with 0.88-mm. square holes. Oversize to (28); undersize to (29).

28. From (27), (35). One No. 4 jig. 3-sieve Harz jig. 1st hutch to (39); 2d to (20); 3d to (25); tailings to (40).

29. From (27). Two amalgamated plates in series. Pulp to (30); amalgam removed periodically and retorted.

30. One No. 1 mercury trap. Pulp to (31); heavy sand and amalgam removed periodically and the amalgam panned out and retorted.

31. One No. 3 hydraulic classifier with three spigots. 1st spigot to (32); 2d to (33); 3d to (34); overflow to (37).

32. One No. 3 double Gilpin County concentrator. Heads to (39); tailings to (35).

33. From (31). One No. 4 double Gilpin County concentrator. Heads to (39); tailings to (40).

34. From (31). One No. 5 double Gilpin County concentrator. Heads to (39); tailings to (36).

35. From (32). One No. 6 double Gilpin County Concentrator. Heads to (28); tailings to (40).

36. From (34). An endless canvas belt table. Heads to (24); tailings to (40).

37. From (31). A fixed canvas table, 6 × 10 feet. Heads to (39); tailings to (40).

* Later changed to 0.55 x 11.8-mm slots.

38. From (13), (15), (17), (19). Settling tank. Settlings removed periodically to (40); water to mill supply pump to be used over again.

39. From (14), (16), (18), (20), (21), (22), (23). (24), (28), (32), (33), (34), (37). The concentrates are all wheeled to the loading floor and weighed in barrows before putting into cars.

40. From (22), (23), (24), (28), (33), (35), (36), (37), (38). Tailings launder to waste.

The labor required is ten men per 24 hours, divided into two shifts: 1 day foreman, 1 day and 1 night engineer who also fire the boilers, attend the pump and weigh the incoming ore wagons, 1 day and 1 night feeder at the breaker, 1 day and 1 night jig man who attend the trommel, jigs and cleaning jig. 1 day and 1 night vanner man who attend the Huntington mill, plates, concentrators, vanner, slime table and classifiers, 1 day laborer who loads and weighs concentrates and unloads coal. Wages vary from $2.50 for laborers per day to $3 for mechanics. Board costs $22 per month, coal $3.25 per ton and wood $4.50 per cord.

The power is derived from two fire tube boilers 54 inches diameter, 16 feet long, with 48 tubes 3½ inches diameter, running under a pressure of 60 pounds per square inch and burning 3 tons of coal per 24 hours; and a Corliss engine with cylinder 14 × 42 inches, cutting off at ¼ stroke and making 69 revolutions per minute.

Water is obtained from a creek and is first settled in settling tanks and then lifted 50 feet to a supply tank by a No. 7 pulsometer pump. This pump also receives some water from the settling tank (38).

The ore assays 0.20 to 0.40 ounce gold and 1½ to 5 ounces silver per ton, a trace of copper and a variable amount of lead, sometimes as high as 2%; the concentrates assay from 0.50 to 1.50 ounces gold and 2½ to 12 ounces silver per ton; the tailings contain 0.02 to 0.06 ounce gold and 0.06 to 1.2 ounces silver per ton. The bullion is 650 fine in gold and 300 fine in silver. The ores are extremely variable, but on an average 100 tons of ore yield about 20 tons of coarse concentrates from the jigs, 10 tons of fine concentrates and 70 tons of tailings. The mill saves from 90 to 93% of the gold and from 75 to 85% of the silver. The loss of mercury is 0.075 ounce per ton of ore.

In this mill amalgamated plates were formerly used after the Gilpin County concentrator (22), the vanner (23), and the slime table (24), but they were given up as useless. Formerly also the pulp from the Huntington mill (26) first went over concentrators and then to amalgamated plates, but the plates were found not to catch anything, no quicksilver being fed to the Huntington mill. The gold which the plates might have caught probably stayed back in the heads saved on the concentrators. The present arrangement gives the plates a chance to save what gold they can from the pulp before it goes to the concentrators. The mill has recently installed a second Huntington mill doing the same work as the first.

§ 766. Mill No. 87. North Star on Sultan Mill, Silverton Mining Company, Silverton, Colorado.—Capacity 125 tons of concentrating ore per 24 hours. The mill runs 24 hours per day, 7 days per week. The ore consists of the economic minerals native gold, pyrite, chalcopyrite, galena, tetrahedrite, bornite and stibnite, and a gangue of quartz, calcite, rhodochrosite and barite. The problem is to save the gold, silver, copper and lead. The ore is sorted in the mine into three classes: (*a*) smelting ore, (*b*) concentrating ore, and (*c*) waste; (*a*) and (*b*) are hoisted separately and brought in cars and dumped upon (1); (*c*) goes to the waste dump.

1. Receiving floor 8 feet wide and 50 feet long, of which about 15 feet are

used for smelting ore going to (2) and 35 feet are used for concentrating ore going to (7).

Sampling Department.

2. One Blake breaker, 8 × 12 inches, crushing to 1½ inches. To (3).

3. From (2) and (4). One pair of rolls, 36 × 14 inches, set ½ inch apart. By bucket elevator to (4).

4. A trommel with 2-mesh square holes. Oversize to (3); undersize to (5).

5. A Vezin sampler. Sample to (6); remainder to cars to smelter.

6. The sample is further crushed and quartered down to obtain three assay samples, one each for mill, smelter, and umpire.

Concentrating Department.

7. From (1). One No. 1 Blake breaker, 9 × 15 inches, crushing to 1½ inches. To (8).

8. A bin 8 feet long, 6 feet wide and 6 feet deep in front, with bottom sloping 45°. By chute through a Hendy feeder to (9).

9. One pair of No. 1 rolls, 36 × 14 inches, set ¼ inch apart. To (10).

10. From (9) and (12). One No. 1 bucket elevator to (11).

11. One No. 1 trommel with 4-mesh and 3-mesh square holes. Oversize to (12); undersize to (13).

12. One pair of No. 2 rolls, 36 × 14 inches, set close together. To (10).

13. From (11). One No. 2 trommel with 6-mesh square holes. Oversize to (17); undersize to (14).

14. One No. 3 trommel with 8-mesh square holes. Oversize to (18); undersize to (15).

15. One No. 4 trommel with 12-mesh square holes. Oversize to (19); undersize to (16).

16. One No. 1 hydraulic classifier with three spigots. Bottom spigot to (20); two upper spigots to (21); overflow to (27).

17. From (13). Two No. 1 jigs. 3-sieve Harz jigs. Discharges and hutches to (28); tailings to (22).

18. From (14). Two No. 2 jigs. 3-sieve Harz jigs. Hutches to (28); tailings to (22).

19. From (15). One No. 3 jig. 3-sieve Harz jig. Products like (18).

20. From (16). One No. 4 jig. 3-sieve Harz jig. Products like (18).

21. From (16). Two No. 5 jigs. 3-sieve Harz jigs. Products like (18).

22. From (17), (18), (19), (20), (21). No. 1 unwatering box. Settlings shoveled to (23); overflow used as feed water to (23).

23. Twenty gravity stamps arranged in four batteries, using screens with 24 or 30-mesh square holes, and having no mercury fed to the mortar. Pulp to (24) if it contains free gold or to (25) if it does not. Mortars cleaned out monthly to remove scraps of iron to waste.

24. Four amalgamated plates. Pulp to (25); amalgam removed fortnightly and retorted.

25. From (23) or (24). Two No. 2 hydraulic classifiers, each with one spigot. Spigots to (26); overflow to (27).

26. Two No. 6 jigs. 4-sieve Harz jigs. Hutches to (28); tailings to (29).

27. From (16) and (25). Four 7-belt Woodbury vanners. Heads to (28); tailings to (29).

28. From (17), (18), (19), (20), (21), (26), (27). Concentrates are caught in boxes below the machines, shoveled out to barrows, wheeled to bin and shoveled into railroad cars to go to smelter.

29. From (26) and (27). Tailings launder to waste.

Water power is used. One 80-horse power Leffel wheel, running under 56 feet head, drives the breaker, rolls and stamps. One 35-horse power Leffel wheel with a governor runs the trommels, jigs, vanners and dynamo.

The water for washing runs into the mill, no pumping being needed.

Shipping ore from some portions of the mine is rich in lead and from others is rich in copper; analyses are as follows:

	Ounces Gold per Ton.	Ounces Silver per Ton.	Lead. %	Copper. %
Lead ore.....	0.25	49.6	24.3	2
Lead ore.....	0.18	48	38	4.15
Copper ore.....	0.20	24.3	3	11.21
Copper ore.....	1.33	68.1	11	8.3

The concentrating ore is worth from $10 to $20 per ton in gold, silver, copper and lead. The concentrates assay 0.5 to 1.5 ounces gold and 20 to 30 ounces silver per ton, 5% copper and 20% lead. The tailings assay a trace of gold, 2 ounces silver, 0.5% copper and 2 to 3% lead, the maximum value of the tailings being $2.50 per ton. One hundred tons of ore yield 25 tons of concentrates and 75 tons of tailings. The mill saves about 85% of the values.

Notice in this mill that although concentrates are saved as coarse as 4 mesh, yet no tailings are allowed to go to waste that are coarser than 24 or 30 mesh.

§ 767. MILL NO. 88. VICTORIA MILL, SILVERTON, COLORADO.—Capacity 75 tons per 24 hours. The mill runs 24 hours per day, 7 days per week. The ore consists of the economic minerals galena, chalcopyrite, pyrite and tetrahedrite, in both coarse and fine crystallization, and a gangue of quartz and "porphyry" (quartz andesite). The problem is to save the gold, silver, lead and copper. The ore is brought down an automatic incline in end dumping cars and dumped upon (1).

1. Receiving floor, 15 × 25 feet. By shovel to (2).
2. One No. 1 Blake breaker, 7 × 12 inches, crushing to 1½ inches. To (3).
3. One pair of No. 1 rolls, 27 × 14 inches, set ½ inch apart. To (4).
4. From (3) and (6). One No. 1 bucket elevator, to (5).
5. One No. 1 trommel with 3-mesh square holes. Oversize to (6); undersize to (7).
6. One pair of No. 2 rolls, 27 × 14 inches, set close together. To (4).
7. From (5). One No. 2 trommel with 6-mesh and 4-mesh square holes. Oversize to (11); undersize to (8).
8. One No. 3 trommel with 10-mesh square holes. Oversize to (12); undersize to (9).
9. One No. 1 hydraulic classifier with two spigots. 1st spigot to (13); 2d to (14); overflow to (10).
10. One No. 2 hydraulic classifier with one spigot. Spigot to (15); overflow as feed water to (17).
11. From (7). One No. 1 jig. 4-sieve Harz jig. Hutches to (26); tailings to (16).
12. From (8). Two No. 2 jigs. 4-sieve Harz jigs. Products like (11).
13. From (9). One No. 3 jig. 4-sieve Harz jig. Hutches to (26); tailings to (17).
14. From (9). One No. 4 jig. 3-sieve Harz jig. Products like (13).
15. From (10). One No. 5 jig. 3-sieve Harz jig. Products like (13).
16. From (11) and (12). Unwatering box. Settlings shoveled to (17); overflow to (27).
17. From (10), (13), (14), (15), (16). Twenty gravity stamps arranged in four batteries, using screens with slots 0.64 mm. wide and having mercury fed

to the mortar. Pulp to (18); at periodical clean up amalgam to be retorted, coarse sand to be put back, and scrap iron to waste.

18. Four amalgamated plates. Pulp to (19); at periodical clean up amalgam to be retorted.

19. Four No. 1 mercury traps. Pulp from two traps to (20) and from other two traps to (22); heavy sand and amalgam removed periodically to (25).

20. Two No. 2 mercury traps. Pulp to (21); heavy sand and amalgam removed periodically to (25).

21. Two double Gilpin County concentrators. Heads to (26); tailings to (27).

22. From (19). One No. 3 hydraulic classifier with one spigot. Spigot to (23); overflow to (24).

23. One No. 6 jig. 3-sieve Harz jig. Hutches to (26); tailings to (27).

24. From (22). One 7-belt Woodbury vanner. Heads to (26); tailings to (27).

25. From (19), (20). Clean up room with clean up pan, panning sinks, hand pans, mortars, etc. Amalgam to be retorted; mercury to be used over in the mill; concentrates to (26); coarse sand back to (17); scrap iron to waste.

26. From (11), (12), (13), (14), (15), (21), (23), (24), (25). Concentrates bins. By wagon and railroad to smelter.

27. From (16), (21), (23), (24). Tailings launder to waste.

Water is brought by a flume. A belt driven pump with two plungers 8 × 8 inches, making 37½ strokes per minute, lifts part of the water from the flume back of the jig floor to a tank 7 feet above the trommel floor. Power is furnished by a Leffel turbine wheel. One hundred tons of ore yield 30 tons of concentrates.

This mill has recently been enlarged and remodelled. Wilfley tables are used and no vanners.

(*v*) MILLS USING MAGNETISM AS THE CHIEF OR ONLY MEANS OF SEPARATING THE VALUABLE MINERALS FROM THE WASTE.

§ 768. This group includes Mills 89 to 91 inclusive and the Joseph Wharton and Witherbee Sherman mills. Mill 89 uses breaker, drier, breakers, rolls and magnets, and auxiliary rolls on middlings which go back into the system. Mill 90 uses breaker, rolls, magnets, and sends middlings back into the system. Mill 91 uses several grades of rolls followed by drier, fine rolls and magnets; the concentrates go to a second drier, finest rolls, magnets and air blast. The Joseph Wharton mill has breaker, rolls and magnets; the middlings are recrushed and sent back into the system. The Witherbee Sherman mill uses breaker, drier, rolls and magnets; middlings are re-treated by rolls and magnets; tailings are worked for apatite.

Magnetic concentration possesses all the advantages of economy which are held by any concentration with the addition that it can be done dry and it is independent of gravity.

The disadvantages of magnetic concentration are that the fine crushing required before separation is costly, the concentration of the fine dust produced is difficult, and the fine iron concentrates are of a low value per ton compared to other metals, and, when fine, are not favored by furnace men as they are blown out of the blast furnace. There is to be considered also the cost of drying the ore before concentration and in general of roasting it where it is not already magnetic, and also the losses which take place in concentration.

The use of fine concentrates has been the subject of much discussion and some furnace men claim that while fine *ore* may give trouble, tests show that the same difficulty does not exist with fine high-grade *concentrates*. Others claim that

tests show that fine concentrates cannot be run unless they are mixed in with coarser material. Briquetting has been used to some extent to obviate this but it adds another item to the expense and the briquettes have not always successfully stood the blast furnace treatment owing to failure of the cementing material. A run with the briquettes made in Mill 91 was very successful. Blast furnace men have solved the problem for ore and are now running regular furnace charges of Lake Superior ore which is all below 8 mesh in size.

Fine crushing is necessary since either the iron ore or the impurity to be eliminated is, in the majority of cases, finely disseminated. Generally where magnetite has been separated the gangue was very hard and as a rule the more finely the ore grains were disseminated the harder the rock, so that the crushing was no small item of expense.

The disadvantage of drying the ore has been overcome in some cases by the use of separators which treat it wet. Some authorities claim that this wet treatment not only saves drying but it also reduces wear, prevents dust and produces under the same circumstances purer concentrates than is possible dry. Others claim that the dry method does better work, that there is no trouble from freezing of water in winter, and that dry ore is more easily sized into the fine sizes, which make a much better magnetic separation than unsized stuff.

The loss in the tailings has been one of the greatest drawbacks to magnetic concentration. In instances that have been given of the work of the various separators it has been no unusual thing for the tailings to contain as high as 10% or even 15% of iron, depending upon the richness of the concentrates. This loss may in some cases be due to imperfections in the magnetic separator, but there are separators which when properly fed and cared for will do their work satisfactorily. The most of the loss is of iron that is in included grains or that is not sufficiently magnetic to go with the concentrates. Thus in concentrating magnetite, any hematite or limonite goes with the tailings. Various other minerals, such as hornblende, contain iron which is carried into the tailings. Where roasting is practiced, particles which have failed to be changed go into the tailings. Of these losses that due to included grains might be lessened by recrushing, but this cannot be economically done in every case since the process will not pay for recrushing of middlings and finer crushing at first causes greater expense and possibly more loss in slimes or dust.

Magnetic concentration at the present day has only a limited application. For ores that contain no other valuable mineral besides iron, its cost limits its use. The opening up of large iron ore deposits of Lake Superior which are so extensive, so rich, and so easily worked has caused the price of iron ores to sink so low that many of those which have to be concentrated magnetically cannot compete. As a consequence some of the plants which were treating magnetite in New York and New Jersey five or ten years ago have been obliged to suspend operations. Whether the field for magnetic concentration will be increased when these deposits at Lake Superior are exhausted is one of the questions of the future. There are always liable to arise peculiar circumstances which will make magnetic treatment desirable.

The particular process to be used in any case will vary with the ore. For natural magnetites a plant like the Joseph Wharton mill or the Witherbee Sherman mill may be successful. For hematites and limonites the Wetherill process would seem to commend itself as having the advantage of simplicity and of being cheaper than the roasting process, but the results so far obtained on iron ores are merely short tests and no working plants have been erected with which to prove its efficiency for iron ores when working on a commercial scale. The roasting process to reduce hematites and limonites to magnetic oxide has already shown its applicability, and it may be used in case the Wetherill process does not

give satisfactory results, although it costs more and is hard to control. On some ores, for example certain pyrite and blende ores, the roasting process has to be used.

For ores which contain other valuable minerals beside iron, magnetic concentration has its greatest application to-day, since in this case the value of the other minerals helps make the operation a commercial success.

§ 769. MILL No. 89. HARTZELL CONCENTRATING COMPANY, ALBURTIS, PENNSYLVANIA.—Capacity 125 tons in 10 hours. The mill runs 10 hours per day, 6 days per week. The ore consists of the economic mineral magnetite, mostly in disseminated grains of ¼ inch diameter or less, and a siliceous gangue with no phosphorus or sulphur. The problem is to get a high grade of iron ore with the least possible loss. The ore is brought from the mine in cars, each holding one ton, and dumped upon (1).

1. A receiving floor 30 feet long and 15 feet wide. By shovel to (2).
2. One No. 1 Blake breaker, made by Brennan & Young, 12 × 24 inches, crushing to 2 inches. To (3).
3. A revolving drier. To (4).
4. One No. 2 Blake breaker, made by Brennan & Young, 12 × 24 inches, crushing to 1 inch. To (5).
5. Two No. 3 Blake breakers, 9 × 17 inches, crushing to ¾ inch. By No. 1 bucket elevator to (6).
6. One No. 1 trommel with 25-mm. round holes. Oversize to (7); undersize to (8).
7. One No. 4 breaker, a Lowry breaker, crushing to ¾ inch. To (8).
8. From (6) and (7). One pair of No. 1 rolls, 30 × 18 inches, set close together. To (9).
9. From (8), (11) and (14). One No. 2 bucket elevator, to (10).
10. Four No. 2 trommels with 2.1-mm. round holes. Oversize to (11); undersize to (12).
11. Two pairs of No. 2 rolls, 30 × 18 inches, set close together. To (9).
12. From (10). A bin with hopper bottom, holding 50 tons. By gate and chute to (13).
13. One Ball Norton magnetic separator. Heads by belt conveyor to car to go to blast furnace; middlings to (14); tailings by belt conveyor to waste dump.
14. One pair of No. 3 rolls, 30 × 18 inches, set close together. To (9).

Power is furnished by three steam engines. One engine of 125 horse power runs the breakers; one engine of 125 horse power runs the rolls, elevators, conveyors, and suction fans; one engine of 25 horse power runs the dynamo. There are two suction fans, one for the magnetic separator and one for the trommels and crushing machines, all of the apparatus after the drier (3) being housed in and attached to the fans for the removal of the dust. The dynamo is a 5,000-watt Thomson Houston of the low tension direct current type running with 110 volts and making 2,000 revolutions per minute.

The ore contains 30% iron (Fe); the concentrates contain 65.5% iron; the tailings contain 2½ to 3% iron. One hundred tons of ore yield 35 tons of concentrates and 65 tons of tailings.

The noticeable feature in this mill is the graded crushing without intermediate screening. There are six reductions in crushing the ore from mine size down to 2.1 mm.

§ 770. MILL No. 90. NEW JERSEY IRON MINING COMPANY, PORT ORAM, NEW JERSEY.—The mill runs 10 hours per day, 6 days per week. The ore consists of the economic mineral magnetite in strings or grains and a gangue of quartz with some finely disseminated apatite. The problem is to save the iron and eliminate the gangue, especially the phosphorus. Only lump ore larger than

one-inch cube is used as this saves the cost of drying. The ore is brought in cars holding 4,000 pounds, dumped upon a platform 10 feet square, and shoveled to (1).

1. One No. 1 Buchanan breaker, 9 × 15 inches, crushing to 1½ inches. To (2).

2. One No. 1 trommel with 19-mm. round holes. Oversize to (3); undersize to (4).

3. One No. 2 breaker, a Buchanan granulator, 3 × 30 inches, crushing to ¾ inch. To (4).

4. From (2) and (3). A belt conveyor, to (5).

5. From (4) and (7). One pair of No. 1 rolls, 24 × 14 inches, set ½ to ¾ inch apart. To (6).

6. From (5) and (8). One pair of No. 2 rolls, 18 × 12 inches, set close together. By No. 1 bucket elevator to (7).

7. One No. 2 trommel on which the screens are changed to suit different ores. The holes vary from 20-mesh square holes to 6.4-mm. round holes. Oversize to (5); undersize to (8).

8. A modified Buchanan magnetic separator. Heads to blast furnace; tailings partly to (6) and partly to waste dump.

The labor required is 4 men per 10 hours: 1 foreman, 1 breaker man, and 2 trommel men. Wages vary from $1.10 to $1.25 per day. Board costs $17 per month, coal is $2 per ton and wood is $3.25 per cord.

Power is furnished by two steam engines; one 75 horse power engine drives the breakers and trommels, and one 10 horse power engine drives the dynamo.

The ore contains about 25% iron (Fe) and 1% phosphorus (P); the concentrates contain about 61% iron and from 0.3% phosphorus down to the Bessemer limit (about 0.045%); the tailings contain 11 to 17% iron.

§ 771. MILL NO. 91. EDISON MAGNETIC CONCENTRATING PLANT, NEW JERSEY AND PENNSYLVANIA CONCENTRATING COMPANY, EDISON, NEW JERSEY.—Capacity 4,000 tons in 20 hours.* This mill was intended to run 20 hours per day, 6 days per week. The ore consists of the economic mineral magnetite and a gangue of feldspar with a little quartz and apatite. The problem is to save the iron as free from phosphorus as possible. The ore is mined in an open quarry and contains lumps weighing up to 5 tons each. It is loaded by steam shovel upon skips holding 6½ tons each, which are hauled to the mill on cars by locomotive. The skips, which are of the open flat form used in quarry work and are suspended by two chains and hooks at the front end and one chain and hook in the rear, are lifted at the mill by two electric travelling cranes and then by unhooking the two front hooks they are dumped to (1).

Coarse Crushing House.

1. One No. 1 roller feeder, 3 feet diameter and 6 feet long. To hopper 6 feet square and thence to (2).

2. One pair of No. 1 or giant rolls, 72 × 72 inches, set 14 inches apart. To (3).

3. One pair of No. 2 or intermediate rolls, 48 × 60 inches, set 7 inches apart. By No. 1 bucket elevator to (4).

4. One pair of No. 3 or first corrugated rolls, 36 × 36 inches, set 3½ inches apart. To (5).

5. One pair of No. 4 or second corrugated rolls, 36 × 36 inches, set 1½ inches apart. To (6).

6. One pair of No. 5 or third corrugated rolls, 24 × 20 inches, set ½ inch apart. By No. 1 belt conveyor and thence by No. 2 bucket elevator to (7).

* It has run as high as 300 tons per hour.

7. Three No. 1 fixed screens in series, the upper one having 37 × 76-mm. slots and the middle and lower ones having 32 × 64-mm. slots. Oversize (bolts, roots, hammer heads, etc.) to dump; undersize to (8).

8. One No. 1 drier in the form of a drying kiln with a distributor at the top. By No. 2 belt conveyor and thence by No. 3 bucket elevator followed by No. 3 Edison distributing conveyor to (9).

9. No. 1 stock house holding 16,000 tons. By No. 4 bucket conveyor to (10).

Fine Crushing and Separating House.

10. Bin, holding 25 tons. By two No. 2 corrugated roller feeders to (11).

11. From (10) and (12). Two sets of No. 6 or three-high rolls, 36 × 30 inches, set close together, but the feed opens them to about 1½ inches. Only one set is run at a time. The crushed ore is carried in succession by two No. 5 belt conveyors, one No. 6 bucket conveyor, one No. 5 bucket elevator, one No. 7 Edison distributing conveyor and twenty No. 3 roller feeders to (12).

12. Two hundred and forty No. 2 fixed inclined screens arranged in sixty sets with four screens in series in each set, having 1.5 × 12.7-mm. slots. Oversize to (11); undersize to (13).

13. Sixty No. 1 Edison magnetic separators. These are 12-inch magnets and are arranged in twenty sets with three magnets in series in each set. Heads by two No. 8 belt conveyors to (14); tailings by No. 9 belt conveyor to (22).

14. One No. 2 drier in the form of a drying kiln with a distributor at the top. To (15).

15. From (14), (16) and (19). Two sets of No. 7 or three-high rolls, 36 × 30 inches, set close together but the feed opens them to about ½ inch. Only one set is run at a time. The crushed ore is carried in succession by two No. 10 belt conveyors, one No. 11 bucket conveyor, one No. 6 bucket elevator, one No. 12 Edison distributing conveyor and twenty No. 4 roller feeders to (16).

16. Two hundred and forty No. 3 fixed inclined screens arranged in sixty sets with four screens in series in each set, having 0.5 × 12.7-mm. slots. Oversize to (15); undersize to (17).

17. Ninety-six No. 2 Edison magnetic separators. They are 8-inch magnets and they are arranged in thirty-two sets with three magnets in series in each set. Heads to (18); tailings to (22).

18. Eight dusting chambers. Heavy material to (19); light material to (20).

19. Three hundred and twenty No. 3 Edison magnetic separators. They are 4-inch magnets and they are arranged in sixty-four sets with five in series in each set. Heads to (21); tailings of 1st or upper magnets to (22); tailings of 2d, 3d, 4th and 5th magnets to (15).

20. From (18). One No. 4 Edison magnetic separator. Heads to (21); tailings are sold for paint.

21. From (19) and (20). No. 2 and No. 3 stock houses with a total capacity of 35,000 tons. From these the concentrates pass in succession through the mixers, the briquetting machines and the baking ovens.

22. From (13), (17) and (19). Sand house. Tailings are here sized and sold for mortar sand, etc.

The labor required for mining, milling and briquetting is 311 men per 24 hours divided into two shifts of 10 hours each; 46 men and boys mining by day and 46 by night; 24 men by day and 24 by night in the coarse crushing house, 32 men by day and 32 by night in the fine crushing and separating house, and 66 men by day and 41 by night doing general work.

Power is furnished by steam. A single Corliss engine of 300 horse power

runs the dynamos for the magnets, for lighting, and for the two electric cranes which require 50 to 80 horse power each. A cross compound engine of 700 horse power runs the coarse crushing plant. A triple expansion vertical engine of 500 horse power runs the three-high rolls, elevators, conveyors, and fans of the fine crushing and separating plant.

The ore contains about 20% iron (Fe) and 0.70 to 0.80% phosphorus (P); the heads of No. 1 magnets (13) contain 40% iron and the tailings 0.8% iron; the heads of No. 2 magnets (17) contain 60% iron; the heads from the dusting chambers (18) contain 64% iron; the heads of No. 3 magnets (19) contain 67 to 68% iron; the mill tailings contain 1.12% iron. Analysis of the briquettes shows 67 to 68% iron, 2 to 3% silica (SiO_2), 0.4 to 0.8% alumina (Al_2O_3), 0.05 to 0.10% manganese, a trace each of lime, magnesia and sulphur, 0.028 to 0.033% phosphorus, 0.75% resinous binder and no moisture. One hundred tons of ore yield about 24 tons of concentrates and 76 tons of tailings. The tailings of No. 1 magnets (13) amount to 55% of the ore fed to the mill.

One especially noticeable feature of this mill is the entire absence of graded crushing and graded sizing. This is allowable because fines are not considered a source of loss in the magnetic separation. This mill contains so many valuable ideas that the author has thought it wise to insert it here although it has never been run except very irregularly in an experimental way. Mr. Edison encountered between the time of the design of the mill and the time of its completion a drop in the price of iron ore due to the discovery of the Mesabi iron ore beds at Lake Superior and the mill now has to face the changed conditions.

§ 772. THE JOSEPH WHARTON MINING COMPANY, HIBERNIA, NEW JERSEY.—Capacity 200 tons in 10 hours. The mill runs 10 hours per day, 6 days per week. The ore consists of the economic mineral magnetite, and a gangue of granite. The problem is to save the iron. The ore comes in cars to the mill in lumps 12 inches and less in diameter and goes to (1).

1. Four No. 1 bins holding 50 tons each. By chutes to skip which lifts to (2).

2. No. 2 or supply bins holding 600 tons. By chutes to (3).

3. One No. 1 breaker, a Buchanan breaker, 12 × 24 inches, crushing to 2½ inches. By No. 1 belt conveyor to (4).

4. Two No. 1 trommels with 1¼-inch holes. Oversize to (5); undersize to (6).

5. Two No. 2 breakers, Buchanan granulators, 6 × 30 inches, crushing to 1¼ inches. To (6).

6. From (4) and (5). No. 2 belt conveyor. By No. 1 elevator to (7).

7. One grizzly with 1-inch spaces. Oversize to (9); undersize to (8).

8. One No. 2 trommel with ¼-inch holes. Oversize to (9); undersize to (13).

9. From (7) and (8). One pair of No. 1 rolls, 36 × 18 inches, set ½ inch apart. To (10).

10. From (9) and (12). No. 2 elevator. To (11).

11. One No. 3 trommel with ¼-inch holes. Oversize to (12); undersize to (13).

12. One pair of No. 2 rolls, 36 × 18 inches, set close together. To (10).

13. From (8), (11) and (15). No. 3 bin. By chute to (14).

14. One Ball Norton magnetic separator. Heads by No. 3 conveyor and No. 5 elevator to shipping bins and cars; middlings by No. 3 elevator to (15); tailings by No. 4 conveyor and No. 6 elevator either to shipping car or to No. 5 and No. 6 conveyors which deliver to waste; dust by fan to dust chamber of which the settlings go to No. 4 conveyor.

15. One pair of No. 3 rolls, 24 × 16 inches, set close together. By No. 4 elevator to (13).

The power used is 130 horse power, divided up about as follows: hoisting

engine, 10; No. 1 breaker, 15; No. 2 breakers, 12; No. 1 rolls, 10; No. 2 rolls, 15; No. 3 rolls, 10; screens, conveyors and elevators, 30; dynamo and separator, 8; mill friction, 20.

Crude ore from the mine averages 38 to 40% iron, 0.04% phosphorus and no sulphur; the concentrates, 63 to 64% iron and 0.008% phosphorus; the middlings, 40% iron; the tailings, 5 to 6% iron. One hundred tons of ore yield 40 tons of concentrates, 20 tons of middlings and 40 tons of tailings. The 20 tons of middlings after being recrushed and separated yield 10 tons of concentrates and 10 tons of tailings. The mill saves 81% of the iron.

§ 773. OLD BED MAGNETIC CONCENTRATING MILL NO. 1 OF WITHERBEE, SHERMAN AND COMPANY, MINEVILLE, NEW YORK.—Capacity 500 tons per 20 hours. The mill runs 20 hours per day, 6 days per week. The ore consists of the economic mineral magnetite and a gangue of apatite and hornblende. The problem is to make three products: (*a*) magnetite to blast furnace, (*b*) apatite to be sold as fertilizer, and (*c*) hornblende to waste. The ore is brought in cars to (1).

1. A grizzly with 2½-inch spaces. Oversize to (2); undersize to (3).

2. One No. 1 Blake breaker, 18 × 30 inches. To (3).

3. From (1) and (2). No. 1 Robins belt conveyor, 20 inches wide, sloping up 18°. By No. 2 Robins belt conveyor, 20 inches wide and level, to (4).

4. Two sets of No. 1 fixed inclined screens with six screens in series in each set and having 19-mm. round holes. Oversize to (5); undersize to (6).

5. Two No. 2 breakers, Gates fine breakers, size H. To (6).

6. From (4) and (5). No. 3 Robins belt conveyor, 16 inches wide and sloping up 18°. By No. 1 bucket elevator to (7).

7. A tower drier. By No. 2 bucket elevator to (8).

8. Three sets of No. 2 fixed inclined screens with six screens in series in each set and having 6-mesh holes. Oversize to (9); undersize to (10).

9. One pair of No. 1 rolls, 36 × 14 inches. To (10).

10. From (8) and (9). No. 4 Robins belt conveyor, 16 inches wide. To (11).

11. From (10) and (16). No. 3 bucket elevator, to (12).

12. Three sets of No. 3 fixed inclined screens with six screens in series in each set and having 30-mesh holes. Oversize to (13); undersize to (17).

13. Three sets of No. 4 fixed inclined screens with six screens in series in each set and having 16-mesh holes. Oversize to (14); undersize to (17).

14. Three sets of No. 5 fixed inclined screens with six screens in series in each set and having 8-mesh holes. Oversize to (15); undersize to (17).

15. Three sets of No. 6 fixed inclined screens with six screens in series in each set and having 4-mesh holes. Oversize to (16); undersize to (17).

16. One pair of No. 2 rolls, 36 × 14 inches. By No. 5 Robins belt conveyor, 16 inches wide and sloping up 10°, to (11).

17. From (12), (13), (14), (15). Four bins for the four products of the screens. The bins deliver to (18).

18. Two double Rowand type F magnetic separators. Heads by No. 6 Robins belt conveyor and No. 4 bucket elevator to (24); tailings by No. 7 Robins belt conveyor and No. 5 bucket elevator to (19).

19. From (18) and (21). One No. 8 Robins belt conveyor, to (20).

20. One set of No. 7 fixed inclined screens with six screens in series and having 16-mesh holes. Oversize to (21); undersize to (22).

21. One pair of No. 3 rolls, 30 × 14 inches. By No. 6 bucket elevator to (19).

22. From (20). A Wenstrom magnetic separator. Heads by No. 9 Robins belt conveyor to (24); tailings by No. 10 Robins belt conveyor to (23).

23. A Rowand type E magnetic separator. Heads (hornblende) by No. 11 Robins belt conveyor to waste; tailings (apatite) to market.

24. From (18) and (22). One No. 12 Robins belt conveyor for concentrates. To bin holding 100 tons.

The ore contains 60% iron and 1.60% phosphorus. The iron concentrates contain 69% iron and 0.18% phosphorus. The tailings from the first magnetic separators contain 16% iron. The apatite from the last magnetic separator contains 13% phosphorus and 2½ to 4% iron. One hundred tons of ore yield about 83 tons of iron concentrates.

(*w*) MAGNETIC COMBINATION MILLS.

§ 774. This group includes Mills 92 and 93 and the plant at Monteponi, Sardinia. These mills combine magnets with other systems as main or subordinate means of separation. Mill 92 uses breakers, picking table for waste garnet, rolls, drier, screens and magnets for valuable franklinite, and on tailings of these magnets uses jigs for valuable calamine and zincite. Mill 93 uses breaker, rolls, and log washer for waste clay, screens and jigs for lead concentrates and zinc iron middlings, and calcining furnace and magnets to remove iron from the zinc. The Monteponi plant is put in here to illustrate foreign practice. It uses breakers, rolls, screens, classifiers, and jigs to save the zinc as far as possible and then adds to this roasting furnaces and magnets for the recovery of the zinc from the ferruginous ores; fines are treated by classifiers, fine jigs, and Ferraris tables.

§ 775. MILL NO. 92.* WETHERILL MAGNETIC CONCENTRATING PLANT, STERLING IRON AND ZINC COMPANY, FRANKLIN FURNACE, NEW JERSEY.—Capacity 200 tons in 24 hours. The mills runs 24 hours per day, 6 days per week. The ore consists of the economic minerals franklinite, willemite, fowlerite, zincite, and tephroite, and a gangue of quartz, calcite, garnet, mica and graphite. The problem is to separate the material into three classes: (*a*) franklinite, fowlerite, and tephroite for the zinc oxide furnaces and the residue then to the spiegel furnace; (*b*) willemite and zincite to the spelter furnace; (*c*) remainder to waste. The treatment is first to remove franklinite, fowlerite, tephroite and garnet by hand picking and powerful magnets the garnet being separated from the other three minerals by variation in the power of the magnets composing the machine; second to jig the willemite and zincite from the calcite, quartz and mica. The ore is hoisted in cars holding 5,600 pounds and run on a transfer car 60 feet to (1).

1. Two grizzlies with 1½-inch spaces. Oversize to (2); undersize to (2).

2. Four No. 1 bins, two for coarse and two for fine, holding 125 tons each, with bottoms sloping 30°. Coarse ore by gates to cars and thence by inclined hoist to (3); fine ore by gates to cars and thence by inclined hoist to (6).

3. Receiving floor, 14 × 15½ feet, with capacity of storing 50 tons of ore. By shovel to (4).

4. One No. 1 Blake breaker, 15 × 30 inches, crushing to 4 inches. To (5).

5. One No. 1 trommel for coarse ore with 12.7-mm. square holes. Oversize to (8); undersize by No. 1 Robins belt conveyor to (10).

6. From (2). No. 1 drier consisting of six chutes 20 feet long, 15 inches wide, sloping 30°, made of cast iron plates, heated by furnace flues below. The ore stream is 6 inches deep and is moved down the chutes by endless chain scrapers moving 6½ feet per minute. By No. 1 bucket elevator to (7).

7. Two No. 1 trommels for fine ore with 12.7-mm. square holes. Oversize to (8); undersize to (10).

8. From (5) and (7). One picking table in the form of a chain plate conveyor divided by fins into three longitudinal parts. Center part containing picked

* This is the mill that is referred to as No. 92 throughout the book except in Chapters IX., X., XIII., XVI. and XIX.

waste, comprising tephroite, fowlerite, garnet, and calcite, to dump; two side parts to (9).

9. One No. 2 Blake breaker, 6 × 20 inches duplex, crushing to ¾ inch. To (10).

10. From (5), (7) and (9). Three No. 2 trommels with 6.4-mm. square holes. Oversize to (11); undersize to (12).

11. Two pairs of No. 1 rolls, 30 × 15 inches, set close together. To (12).

12. From (10) and (11). Four No. 3 trommels with 1.5-mm. square holes. Oversize to (13); undersize to (14).

13. Two pairs of No. 2 rolls, 24 × 16 inches, set close together. To (14).

14. From (12), (13) and (17). One No. 2 bucket elevator. To (15).

15. Six No. 4 trommels with 1.5-mm. square holes. Oversize to (16); undersize to (18).

16. One No. 9 trommel with 6.4-mm. square holes. Oversize (nails, sticks, and a little ore) allowed to accumulate to be treated later; undersize to (17).

17. One pair of No. 3 rolls, 24 × 16 inches, set close together. To (14).

18. From (15). Six No. 1, or 1st rough, Wetherill parallel magnetic separators. Heads (franklinite) to (34); tailings by six No. 2 Robins belt conveyors to (19).

19. Six No. 2 bins or circular tanks, 8 feet high, 6½ feet diameter at top and 7 feet diameter at bottom, outside dimensions. To (20).

20. Six No. 2, or 2d rough, Wetherill horizontal magnetic separators. Heads (franklinite) by two No. 3 Robins belt conveyors to (34); tailings by four No. 4 Robins belt conveyors and two No. 3 bucket elevators to (21).

21. Two No. 5 trommels with 0.85-mm. square holes. Oversize to (26) via (25); undersize to (22).

22. Two No. 6 trommels with 0.75-mm. square holes. Oversize to (27) via (25); undersize to (23).

23. Two No. 7 trommels with 0.54-mm. square holes. Oversize to (28) via (25); undersize to (24).

24. Two No. 8 trommels with 50-mesh square holes. Oversize to (29) via (25); undersize to (30) via (25).

25. From (21), (22), (23), (24), (33). Ten No. 3 bins or circular tanks, 5 feet high, 4½ feet diameter at bottom and 3 feet 10 inches diameter at top, outside dimensions. Each pair receives a trommel product and they deliver to (26), (27), (28), (29) and (30).

26. From (21) via (25). Six No. 3 Wetherill horizontal magnetic separators arranged in two rows with three in series in each row. Heads of 1st and 2d magnets (clean franklinite) by No. 5 belt conveyors to (34); heads of 3d magnets (included grains of franklinite, willemite, tephroite, and garnet) by No. 6 belt conveyors to (31); tailings of 1st magnets by No. 5 elevators to 2d magnets; tailings of 2d magnets by No. 6 elevators to 3d magnets; tailings of 3d magnets to (35).

27. From (22) via (25). Six No. 4 Wetherill horizontal magnetic separators arranged in two rows with three in series in each row. Products like (26) except tailings of 3d magnet to (36).

28. From (23) via (25). Six No. 5 Wetherill horizontal magnetic separators arranged in two rows with three in series in each row. Products like (26) except tailings of 3d magnet to (37).

29. From (24) and (33) via (25). Six No. 6 Wetherill horizontal magnetic separators arranged in two rows with three in series in each row. Products like (26) except heads of 3d magnets (clean franklinite) by No. 5 belt conveyors to (34) and tailings of 3d magnets to (38).

30. From (24) and (33) via (25). Six No. 7 Wetherill inclined magnetic

separators arranged in two sets with three in series in each set. Heads of all three magnets (clean franklinite) by No. 5 belt conveyors to (34); tailings of 3d magnet (clean willemite and zincite) wheeled to (43).

31. From (26), (27), (28) and (32). Two pairs of No. 4 rolls, set close together. To (32).

32. No. 1 vibrating screens with 30-mesh square holes. Oversize to (31); undersize to (33).

33. No. 2 vibrating screens with 50-mesh square holes. Oversize by elevator to (29) via (25); undersize by elevator to (30) via (25).

34. From (18), (20), (26), (27), (28), (29), (30). One No. 4 bucket elevator. By No. 7 belt conveyor to (43).

35. From (26). Two No. 1 jigs. 4-sieve Harz jigs. 1st, 2d and 3d discharges (clean willemite) to (41); 4th (willemite, limestone, graphite and mica) returned to same jig; 1st, 2d and 3d hutches to (41); 4th returned to same jig; tailings to (44).

36. From (27). Two No. 2 jigs. 4-sieve Harz jigs. Products like (35).

37. From (28). Two No. 3 jigs. 3-sieve Harz jigs. 1st hutch (clean willemite and zincite) to (41); 2d to (41) or returned to same jig; 3d returned to same jig; tailings to (44).

38. From (29). Two No. 4*a* jigs. 2-sieve Harz jigs. 1st hutch (clean zincite and willemite) to (41); 2d to (41) or returned to same jig; tailings to (39).

39. Two No. 2 unwatering boxes. Spigot to (40); overflow to (45).

40. Two No. 4*b* jigs. 2-sieve Harz jigs. 1st hutch to (41) or returned to same jig; 2d returned to same jig; tailings to (44).

41. From (35), (36), (37), (38) and (40). One No. 7 platform elevator, to (42).

42. One No. 2 drier, like (6) except that it has no scrapers and only three chutes. By No. 8 bucket elevator to (43).

43. From (30), (34) and (42). Seven No. 4 bins for concentrates, four being for franklinite and three for willemite and zincite, each 14 feet long, 10½ feet wide, and 9½ feet deep, with a capacity of 100 tons. The franklinite is shipped to furnaces to be worked for zinc oxide and spiegeleisen. The zincite and willemite go to the spelter furnace.

44. From (35), (36), (37) and (40). Two No. 1 unwatering boxes. Spigots wheeled to waste dump; overflow to (45).

45. From (39) and (44). Waste launder to creek.

Power is furnished by two boilers 18 feet long, 66 inches diameter, with tubes 4½ inches diameter and running under a steam pressure of 100 pounds per square inch. One compound engine with cylinders 10 × 20 inches and 18 × 20 inches, making 150 revolutions per minute, cutting off at $\frac{3}{10}$ stroke on the high pressure cylinder and $\frac{6}{10}$ stroke on the low pressure, drives the crushing machinery. One compound engine with cylinders 12 × 24 inches and 22 × 24 inches, making150 revolutions per minute, cutting off at $\frac{3}{10}$ stroke on the high pressure cylinder and $\frac{6}{10}$ stroke on the low pressure, drives the concentrating machinery and the dynamos. There are two compound wound multipolar 25-kilowatt dynamos made by the Eddy Electric Manufacturing Company, each generating 480 amperes with 52 volts and used for the magnetic separators and electric lights in series or in parallel.

The fine tailings of No. 7 separator (30) contain 2.5% iron, 5% manganese, and 12 to 44% zinc. The coarse jig concentrates contain 1.5 to 2% iron and 3 to 5% manganese. Owing to difference in friability the coarse jig concentrates are willemite and the fine jig concentrates are zincite with some willemite. One hundred tons of ore yield about 56 tons of clean franklinite, 30 tons of wil-

lemite and zincite, and 14 tons of waste tailings. The ore in one particular run contained 31.09% of oxide of zinc (ZnO), 20.34% iron and 9.34% manganese; the franklinite concentrates contained 24.38% oxide of zinc, 35.50% iron and 13.62% manganese; the willemite and zincite contained 60% oxide of zinc, 1.50% iron and 6.10% manganese; the waste tailings contained 4% oxide of zinc.

The concentrating part of this mill, beginning with No. 1 separators (18) is in two independent sections. Graded crushing and sizing to avoid fines is well illustrated in the crushing part of this mill. The duplex breaker (9) was installed to crush two grades of material from the picking belt separately if desired. The mill has been considerably changed during its process of development and an outline will therefore be given of its present arrangement.

§ 776. *Mill No. 92 in its Improved Form.**—(See Figs. 523*a* and 523*b*.)—The ore is dumped to (1).

1. Grizzly with 1½-inch spaces. Oversize to (2); undersize to (10).
2. Receiving floor. By shovel to (3).
3. One No. 1 Blake breaker, 15 × 30 inches, crushing to 4 inches. To (4).
4. One No. 1 fixed inclined screen with 25-mm. slots. Oversize and undersize to (5), the former being above the latter.
5. From (4) and (10). A rubber picking belt. Waste rock to dump; residue to (6).
6. One No. 2 Blake breaker, 6 × 20 inches duplex, crushing to ¾ inch. To (7).
7. Two No. 1 trommels with 6.4-mm. square holes. Oversize to (8); undersize to (9).
8. Two pairs of No. 1 rolls, 30 × 15 inches, set close together. To (9).
9. From (7) and (8). One No. 1 bucket elevator. To (11).
10. From (1). One No. 2 fixed inclined screen with 12.7-mm. holes. Oversize to (5); undersize by No. 1 belt conveyor to (11).
11. From (9) and (10). An Edison drier. By conveyor and chute to (12).
12. Four No. 2 trommels with 2.2-mm. square holes. Oversize to (13); undersize to (14).
13. Two pairs of No. 2 rolls, 24 × 16 inches, set close together. To (14).
14. From (12) and (13). One No. 2 bucket elevator. To (15).
15. Four No. 3 trommels for No. 2 rolls with 1.5-mm. square holes. Oversize to (16); undersize to (19).
16. One No. 4 trommel with 25.4-mm. square holes. Oversize (sticks, etc.) to waste; undersize to (17).
17. From (16) and (18). One pair of No. 3 rolls, 24 × 14 inches, set close together. By No. 3 bucket elevator to (18).
18. Two No. 3 trommels for No. 3 rolls with 1.5-mm. square holes. Oversize to (17); undersize to (19).
19. From (15) and (18). Four No. 2 rubber belt conveyors, followed by two No. 3 conveyors to (20).
20. Six No. 1 bins or circular tanks. To (21).
21. Six No. 1 Wetherill magnetic separators. Heads by No. 4 conveyors and No. 4 elevators to (38); tailings by No. 5 conveyors and No. 5 elevators to (22).
22. Two No. 5 trommels with 0.94-mm. square holes. Oversize to (27) via (26); undersize to (23).
23. Two No. 6 trommels with 0.81-mm. square holes. Oversize to (28) via (26); undersize to (24).
24. Two No. 7 trommels with 0.58-mm. square holes. Oversize to (29) via (26); undersize to (25).

* This is the mill that is referred to as No. 92 in Chapters IX., X., XIII., XVI. and XIX.

25. Two No. 8 trommels with 0.25-mm. square holes. Oversize to (30) via (26); undersize to (31) via (26).

26. From (22), (23), (24), (25). Ten No. 2 bins or circular tanks. Each pair receives a trommel product and they deliver to (27), (28), (29), (30) and (31).

27. From (22) via (26). Six No. 2 Wetherill magnetic separators arranged in two rows with three in series in each row. Heads of all three magnets conveyed to No. 4 conveyors and thence by No. 4 elevators to (38); tailings of 1st magnet elevated to 2d magnet; tailings of 2d magnet elevated to 3d magnet; tailings of 3d magnet to (32).

28. From (23) via (26). Six No. 3 Wetherill magnetic separators arranged in two rows with three in series in each row. Products like (27) except tailings of 3d magnet to (33).

29. From (24) via (26). Six No. 4 Wetherill magnetic separators arranged in two rows with three in series in each row. Products like (27) except tailings of 3d magnet to (34).

30. From (25) via (26). Six No. 5 Wetherill magnetic separators arranged in two rows with three in series in each row. Products like (27) except tailings of 3d magnet to (35).

31. From (25) via (26). Six No. 6 Wetherill magnetic separators arranged in two rows with three in series in each row. Products like (27) except tailings of 3d magnet are caught in a hopper and are conveyed to No. 6 elevator and thence to (40).

32. From (27). Two No. 1 jigs. 4-sieve Harz jigs. 1st, 2d and 3d discharges to (39); 4th returned to same jig; 1st, 2d and 3d hutches to (39); 4th returned to same jig; tailings to (41).

33. From (28). Two No. 2 jigs. 4-sieve Harz jigs. Products like (32).

34. From (29). Two No. 3 jigs. 3-sieve Harz jigs. 1st and 2d discharges to (39); 3d returned to same jig; 1st and 2d hutches to (39); 3d returned to same jig; tailings to (41).

35. From (30). Two No. 4 jigs. 2-sieve Harz jigs. 1st hutch to (39); 2d to (39) or returned to same jig; tailings to (36).

36. Two No. 2 unwatering boxes. Spigot to (37); overflow to creek to waste.

37. Two No. 5 jigs. 2-sieve Harz jigs. 1st hutch to (39) or returned to same jig; 2d returned to same jig; tailings to (41).

38. From (21), (27), (28), (29), (30), (31). An elevating conveyor and bins for franklinite concentrates. To furnaces.

39. From (32), (33), (34), (35), (37). Cars and elevator to No. 2 revolving cylindrical drier and thence by No. 6 bucket elevator to (40).

40. From (31) and (39). Two bins for willemite and zincite concentrates. To furnaces.

41. From (32), (33), (34), (37). No. 1 unwatering boxes. Spigots by cars and platform elevator to waste dump; overflow waste to creek.

One set of figures of the work done is as follows:

	Percent of Total Weight.	Analysis.		
		Iron.	Manganese.	Zinc.
		%	%	%
Ore	100			
Franklinite concentrates	67.48	29.47	13.57	22.94
Zincite and willemite concentrates	23.99	2.20	5.15	48.96
Tailings	8.53			4.19

This is better work than that done by the mill as originally started. There is about 5% iron and manganese together in pure willemite and zincite concentrates.

§ 777. *A Second Mill* has been erected by this company with a capacity of 1,400 tons in 24 hours (really 20 hours actual work). The general process has not varied but the method of crushing has been changed and also the method of sizing so that a saving in cost of something over $0.10 per ton treated has been effected. The ore is dumped to (1).

1. One pair of No. 1 or Edison's giant rolls, 60 × 36 inches. To (2).
2. One pair of No. 2 or corrugated rolls, 36 inches diameter. By No. 1 Robins belt conveyor to (3).
3. One pair of No. 3 or smooth rolls, 24 inches diameter. By No. 2 Robins belt conveyor and No. 1 bucket elevator to (4).
4. No. 1 Edison fixed inclined screens with 12.7-mm. slots. Oversize (sticks, etc.) to waste; undersize to(5).
5. An Edison drier. To (6).
6. From (5) and (7). Two pairs of No. 4 rolls, 36 inches diameter. By No. 2 bucket elevator to (7).
7. No. 2 Edison fixed inclined screens with No. 10 slots. Oversize to (6); undersize by No. 3 Robins belt conveyor to (8).
8. Storage bins holding 8,000 tons. By one No. 4 Robins belt conveyor followed by two No. 5 Robins belt conveyors to (9).
9. Separating house made in two sections. This is practically the same as in the old mill except that trommels have been discarded for Edison fixed inclined screens and the Rowand cross belt magnetic separators are used. These yield cleaner products as they have removed the trouble caused by the tangling of non-magnetic particles with those that are magnetic.

§ 778. MILL NO. 93. WYTHE LEAD AND ZINC MINE COMPANY, AUSTINVILLE, VIRGINIA.—Capacity 80 tons in 10 hours. The mill runs 10 hours per day, 6 days per week. The ore consists of the economic minerals limonite, smithsonite, willemite and cerrusite, and a gangue of dolomite and quartz. The problem is to save the lead, zinc and iron separately. The ore is soft and is mined in an open cut and any limestone wall rock is picked out before hoisting. It is dumped to (1).

1. One No. 1 Blake breaker, 9 × 15 inches, crushing to 1½ inches. To (2).
2. One pair of No. 1 rolls, 30 × 14 inches, set ¼ inch apart. To (3).
3. A single log washer, 13 feet long, making 12 revolutions per minute and using one horse power. The paddles are of cast iron, 32 inches diameter, weigh 2,000 pounds per set and last for 1,000,000 tons of ore. The bottoms are of wood and last indefinitely. Heads to (4); tailings (clay) to waste.
4. From (3) and (6). One No. 1 bucket elevator. To (5).
5. One No. 1 trommel with 6-mm. round holes. Oversize (about 25%) to (6); undersize (about 75%) to (7).
6. One pair of No. 2 rolls, 24 × 12 inches, set ¼ inch apart. To (4).
7. From (5). One No. 2 trommel with 3½-mm. round holes. Oversize to (9); undersize to (8).
8. One No. 3 trommel with 2-mm. round holes. Oversize to (10); undersize to (11).
9. From (7). Two No. 1 jigs. 4-sieve double Harz jigs with sieves 14 × 28 inches. The early compartments make lead concentrates to lead furnaces; the products of later compartments and the tailings are zinc and iron concentrates by tramway ¼ mile to (12).
10. From (8). One No. 2 jig. 4-sieve double Harz jig with sieves 14 × 28 inches. Products like (9).
11. From (8). Three No. 3 jigs. 4-sieve double Harz jigs with sieves 14 × 28 inches. Products like (9).

12. From (9), (10), (11). Two reverberatory roasting furnaces with hearths 7 feet × 8 or 9 feet, for rendering the iron ore magnetic. To (13).

13. Cooling floor with area of about 1,000 square feet. The ore is partly quenched with water and goes by No. 2 bucket elevator to (14).

14. A Payne two-drum magnetic separator. Heads to iron blast furnace; tailings to zinc furnace.

The lead concentrates contain about 60% lead, the iron concentrates contain about 48% iron and the zinc concentrates contain about 35% zinc and 4 to 6% iron. One hundred tons of ore yield 50 tons of clay washed off in the log washer, 2½ tons of lead concentrates, 12½ tons of iron concentrates, and 35 tons of zinc concentrates.

§ 779. The Concentration Works at Monteponi, Sardinia.[405]—The ore consists of the economic minerals calamine, smithsonite, and ochreous iron ore with some galena, cerrusite, siderite, and blende, and a gangue of limestone and dolomite with some barite. The smithsonite is very hard and is found mostly in the crushed sizes above 10 mm. The calamine is friable and ferruginous and forms with the ochreous iron ore mixed iron-zinc ores which are difficult to separate in the wet way. In the zinc dressing mill these mixed ores gradually work down into the finer sizes and form middlings which go to the magnetic separation; some of the iron-zinc ores are so light that they go with the gangue as waste. The galena is very compact and acts similar to the smithsonite. It carries 0.2% silver. The cerrusite is friable and is found in the finest crushed sizes. It is poor in silver.

For twenty years previous to 1886 the company used no concentration beyond hand picking and during this time they accumulated 225,000 metric tons of material on the surface containing 13% zinc, 100,000 metric tons of material in the mine containing 18% zinc, and 300,000 tons of unbroken ore in the mine containing 12% zinc. Lead is present in amounts varying from ¼ to 2%. From tests it was calculated that the above 625,000 metric tons could be concentrated to yield 517,000 tons of tailings with 9% zinc and 108,000 tons of raw zinc concentrates with 34% zinc or 80,000 tons of calcined zinc concentrates with 46% zinc.

The ore from the mine to-day is divided into the following classes, the division between rich ore and poor ore being roughly made at 25% zinc: (*a*) zinc ores containing over 25% zinc, averaging 34.5% zinc, go straight to the calcining furnace; (*b*) granulated cerrusite containing 60% lead and some silver goes to lead smelter; (*c*) smithsonite containing 70% lead and 0.2% silver goes separately to lead smelter; (*d*) ferruginous ore with 26% zinc and 40% iron oxide goes to the magnetic mill; (*e*) mixed ores and fines with 13% zinc go to the zinc mill; (*f*) clay with 8.5% zinc is thrown aside; (*g*) waste material with 2% zinc goes to the dump.

Zinc Mill.

Capacity 210 metric tons per day (probably 10 hours). The material is brought in little wagons, each holding 0.5 cubic meter (1,500 pounds) and dumped into (1).

1. Two horizontal grizzlies with 100-mm. spaces. Oversize hand picked into lead concentrates to (23), zinc concentrates to (24), and residue or mixed ore to (2); undersize to two hoppers with feeders at the bottom, to (3).

2. From (1) and (4). One Blake breaker. By No. 1 bucket elevator to (1).

3. From (1). Two sets of inclined shaking screens, each set having a 30-mm. screen 3.3 m. long above, and an 8-mm. screen 2.7 m. long below. Two hundred

liters of water per minute come to each set. Over 30 mm. by two steel conveying belts to (4); through 30 on 8 mm. to (5); through 8 mm. to (12).

4. Two steel picking belts. Lead concentrates to (23); zinc concentrates to (24); mixed ores by No. 2 bucket elevator to (2); residue (waste) to waste bin and thence by wagons to dump.

5. From (3) and (11). Two No. 1 trommels. Sectional with 8 and 16-mm. holes. Over 16 mm. to (6); through 16 on 8 mm. to (7); through 8 mm. to (13).

6. Eight No. 1 jigs. 1-sieve Ferraris intermediate jigs. Some skimmings (lead concentrates) removed daily to (23); some discharges (zinc concentrates) to (24); some skimmings and discharges (mixed free grains) to (8); some skimmings and discharges (included grains) to (10); hutches to (15); tailings to (25).

7. From (5) and (12). Four No. 2 jigs. 1-sieve Ferraris intermediate jigs. Products like (6).

8. From (6) and (7). One No. 3 bucket elevator. To (9).

9. Four No. 3 jigs. Two 5-sieve jigs and two 1-sieve jigs. Lead concentrates to (23); middlings to (10); probably also zinc concentrates to (24) and hutches to (15).

10. From (6), (7), (9). One No. 4 bucket elevator followed by one No. 5 bucket elevator and automatic feeder to (11).

11. One pair of rolls. By No. 6 bucket elevator to (5).

12. From (3). One No. 2 conical trommel with 8-mm. holes. Oversize to (7); undersize to (13).

13. From (5) and (12). Four No. 1 Ferraris hydraulic classifiers in series, each with one spigot. Spigots to (14); overflow to (17).

14. Four No. 4 jigs. 5-sieve Ferraris jigs. Some discharges and hutches (lead concentrates) to (23); some (zinc concentrates) to (24); some (mixed free grains) to (15); some (included grains) to (20); tailings to (25).

15. From (6), (7), (9) and (14). A hopper shaped bin. To (16).

16. One No. 3 trommel. Oversize (small in amount) probably to (21); undersize to (17).

17. From (13), (16) and (22). One box classifier in the form of a pointed box. Spigot to (18); overflow to settling tanks to be pumped back and used over.

18. Six No. 2 Ferraris hydraulic classifiers in series, each with one spigot. Spigots to (19); overflow probably to a settling tank.

19. Six No. 5 jigs. 5-sieve Ferraris jigs. Lead concentrates to (23); zinc concentrates to (24); mixed free grains to (22); included grains to (20); tailings to (25).

20. From (14) and (19). One No. 7 bucket elevator. To (21).

21. From (16) and (20). One fine crusher built like a jaw breaker but having also a lateral movement of the jaws. To (22).

22. From (19) and (21). One No. 8 bucket elevator. To (17).

23. From (1), (4), (6), (7), (9), (14), (19). The lead concentrates from the jigs are caught in pails or little settling tanks below each jig and are shoveled out into wagons and, together with the hand picked lead concentrates, go to the lead smelter.

24. From (1), (4), (6), (7), (9), (14), (19). The zinc concentrates are collected in the same way as the lead concentrates and go to calcining furnaces where the moisture and carbon dioxide are driven off and the product is then ground.

25. From (6), (7), (14), (19). Tailings of the jigs are caught in little

settling boxes and thence go by wagons to the waste dump, or some of the products are rich enough to go to the magnetic mill.

All the overflows of the classifiers and of the settling boxes for the jig products previous to paragraph (17) are delivered to the pointed box (17). The overflow of this is collected in a settling tank $6 \times 6 \times 5$ meters deep and having a hopper bottom and gate for the periodical removal of the settled mud. Four centrifugal pumps in two sets with two pumps in series in each set, each set run alternately, lift the water from this tank to one of the two supply tanks at the top of the mill. Water from the mine pump is delivered to a tank in the mill and is lifted by two centrifugal pumps, run alternately, to the other supply tank at the top of the mill. One of these supply tanks supplies the shaking screens, the Nos. 1, 2 and 3 jigs and the hydraulic classifiers; the other supplies the trommels and the rest of the jigs. The mill uses 3,500 liters of water per minute of which 1,500 liters come from the mine pump and 2,000 liters are repumped in the mill.

Power is supplied by a steam engine with two cylinders, each 400 mm. diameter and 750 mm. long. The mill, together with its electric lights, requires about 100 horse power.

The ore coming to the mill averages 12% zinc and the daily product of calcined zinc concentrates from the mill amounts to 18.609 tons containing 46% zinc. The concentrates before calcining contain 34% zinc. The average of the total ore mined is 13.32% zinc and the total daily product of calcined zinc concentrates from rich ore and the mill is 26.822 metric tons containing 46% zinc. In 1899 the company produced 13,000 metric tons of calcined zinc concentrates, 3,000 tons of metallic lead and 3,000 kilos of silver.

Magnetic Mill.[269]

The material treated is the mixed zinc-iron ore from the mine and from the zinc mill. It is brought by No. 1 bucket elevator to (1).

1. Three continuous revolving furnaces having the flame passing through them. They slope 3° 35′ and make 16 revolutions per hour. The grate has an area of 1.5 sq. m. and has a deep fire supplied by an air blast. The ore passes through the furnace in about six hours. The roasted product goes to (2).
2. From (1) and (5). One No. 2 bucket elevator. To (3).
3. A sectional trommel having 1, 1.6, 3 and 6-mm. holes. Over 6 mm. to (4); other four sizes by four little feeders to (6).
4. From (3) and (6). One No. 3 bucket elevator. To (5).
5. One pair of rolls. To (2).
6. From (3). Four Ferraris magnetic separators. Heads (zinc concentrates) to (7); middlings to (4); tailings (iron ore) to dump.
7. The zinc concentrates go straight to market except the material below 1 mm. which contains so much dolomite that it has to be jigged.

A dynamo with 12 amperes and 60 volts runs the magnetic separators and the electric lights.

The ore contains about 26% zinc and 10% iron. During the first year the plant treated 5,000 tons, and yielded 1,530 tons of zinc concentrates containing 41.7% zinc. Since then they have improved the work so that they get concentrates with 45% zinc.

Fine Concentration Plant.[410]

This was built after the zinc mill and has a capacity of 20 tons in 11 hours. The material treated is probably some of the fine products from the zinc mill, containing calamine, cerrusite and galena, and gangue. It is first sized in a trommel with 1 or 1.5-mm. holes. The oversize passes to a 5-sieve jig and the

undersize is fed to a Ferraris classifier which yields spigot product to a second 5-sieve jig and overflow to a box classifier (*spitzkasten*). The latter makes three products which are separated on Ferraris tables.

(*x*) MILLS NOT ALREADY CLASSIFIED.

This includes the sampling and fine crushing Mill 94, the Elmore oil concentration mill and the treatment of miscellaneous substances including chromite, quicksilver ores, graphite, clay and kaolin, corundum and emery, asbestos, diamonds and tinstone. Many others might be taken up but as a rule they are of only local importance in comparison with the metal bearing ores. Foster[18] gives a short account of the treatment of several of them such as amber, asphalt, salt, slate, stone, etc.

§ 780. MILL NO. 94. LEADVILLE GOLD AND SILVER EXTRACTION COMPANY, LEADVILLE, COLORADO.*—(See Figs. 524*a*-524*e*.)—Capacity estimated to be 50 tons in 10 hours to 30 mesh, or 75 tons to 20 mesh, but the ore had 10% moisture so that the drier was inadequate and the capacity of the mill was thereby limited to 75 tons in 24 hours. The mill ran 24 hours per day. The ore consisted of the economic minerals native gold and cerrusite and a gangue of partly decomposed gray porphyry containing more or less kaolin and stained with oxide of iron. The problem was to save the gold by cyanide. The ore came by wagons or railroad cars and, when not to be immediately treated, was shoveled to (1) or (2); otherwise wheeled to (3).

1. Receiving floor for storage. To (3).
2. No. 1 bins for storage. To (3).
3. A Briart bar screen with 1½-inch spaces, also serving as a feeder. Oversize to (4); undersize to (5).
4. One No. 1 Blake breaker, 9 × 15 inches, crushing to 1½ inches. To (5).
5. From (3) and (4). Shaking screen with ¾-inch round holes. Oversize to (6); undersize to (7).
6. No. 2 Blake breaker, 5 × 30 inches, crushing to ¾ inch or less. To (7).
7. From (5) and (6) and sometimes (8) and (10). No. 1 elevator, lifting 40 feet. To (8).
8. A Vezin sampler. It yields ⅞ (rejected ore) to (11) and ⅛ (sample) to (9) if the quantity is small, or, if large, to No. 3 bin holding 10 to 15 tons. In the latter case it then goes by chute to No. 1 elevator (7) and through the sampler a second time, yielding again ⅞ (rejected ore) to (11) and ⅛ (sample) to (9). If however it is still too large it goes to No. 4 bin holding 4 or 5 tons and thence by chute to No. 1 elevator (7) and sampler a third time, which yields ⅞ to (11) and ⅛ to (9).
9. One pair of No. 1 rolls, 20 × 12 inches, set ⅛ inch apart when crushing. To (10).
10. Sampling floor. The ore is cut down by riffle samplers or by fractional selection, dried if necessary, ground finer in a sample grinder, cut down further and finished on a bucking plate. Sample to assayer; rejected ore wheeled to (12) or fed to No. 1 elevator (7) which delivers all of it to (11), the sampler (8) being thrown out of action during this short operation.
11. From (8). Five No. 2 bins holding 37,500, 43,000, 59,000, 75,000 and 75,000 pounds respectively. By gates and cars holding 1,400 pounds each to (12).
12. From (10) and (11). A Hendy feeder. To (13).
13. An Argall 4-tube drier. By No. 2 bucket elevator, lifting 44 feet, to (14).

* The whole plant included sampling, fine crushing and cyaniding, but the last is omitted here as being outside the province of ore dressing.

14. From (13) and (16). One No. 1 trommel. Sectional with 1-inch round holes and 4-mesh square holes. Over 1 inch to (15); through 1 inch on 4 mesh to (16); through 4 mesh to (17).

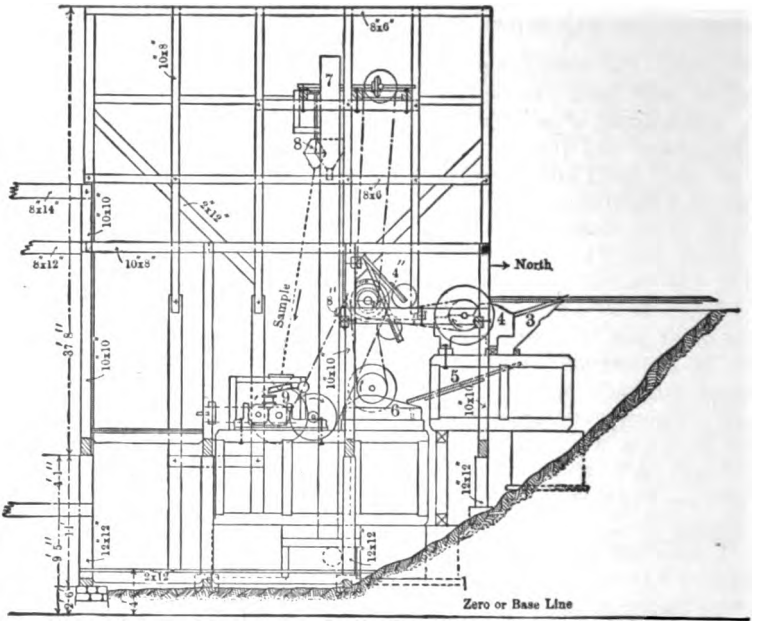

FIG. 524*a*.—SECTION OF SAMPLING PART OF MILL 94 ON *ABCD* OF FIG. 524*b*.

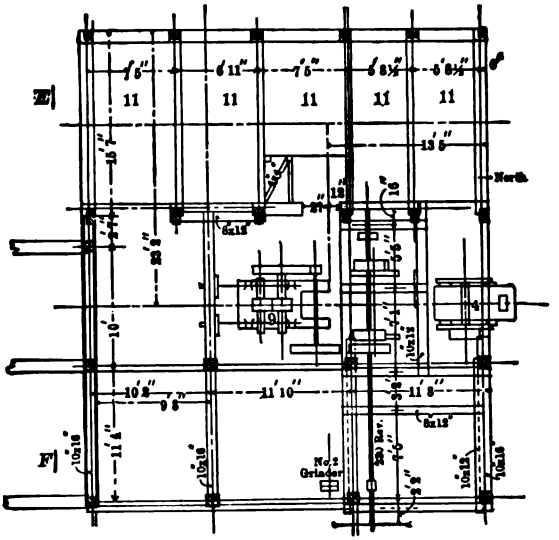

FIG. 524*b*.—PLAN OF SAMPLING PART OF MILL 94.

15. Picking bin. Bolts, pick points, etc., to waste; residue to (16).

16. From (14), (15) and (25). One pair of No. 2 rolls, 27 × 14 inches, set $\frac{1}{8}$ inch apart when crushing. By No. 3 bucket elevator, lifting 35 feet, to (14).

17. From (14) and (19). No. 4 bucket elevator lifting 35 feet. To (18).
18. Two No. 2 trommels. Sectional with 0.13 and 0.07-inch square holes.

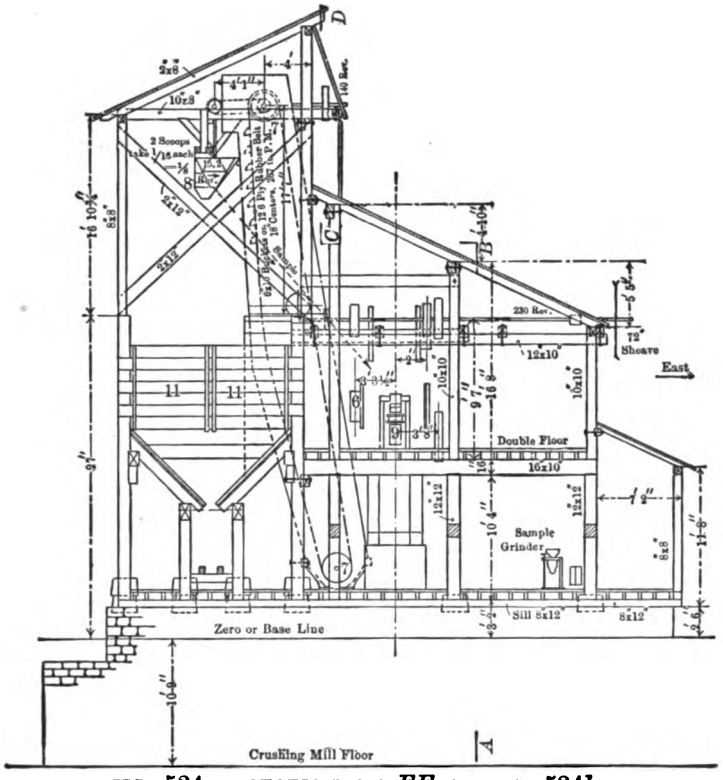

FIG. 524*c*.—SECTION ON *EF* OF FIG. 524*b*.

Over 0.13 inch (chips, strings, etc.) to (25); through 0.13 on 0.07 inch to (19); through 0.07 inch to (20).

19. One pair of No. 3 rolls, 27 × 14 inches, set almost close together. To (17).
20. From (18) and (22). No. 5 bucket elevator lifting 35 feet. To (21).
21. Four No. 3 trommels with 0.03-inch square holes. Oversize to (22); undersize to (23).
22. One pair of No. 4 rolls, 27 × 14 inches, set almost close together. To (20).
23. From (21) and (26). No. 6 bucket elevator, lifting 45 feet. By screw conveyor to (24).
24. Six No. 5 bins holding 46 to 50 tons each. By gate and car to cyanide plant.
25. From (18). Floor. Stuff is here cleaned up periodically and yields refuse (chips, strings, etc.) to waste, and residue to (16).
26. Dust chamber and exhaust fan. This sucks dust from all elevator, trommel and rolls casings. Settlings to (23); fine dust to waste.

The power was furnished by a Porter-Allen engine rated at 170 horse power with a cylinder 12 × 20 inches, running under 85 pounds steam pressure with cut off at ¼ stroke. The total power required by the mill was estimated to be 107 horse power.

This mill is a most excellent example of the use of graded fine crushing to avoid the formation of slimes. Each particle that is crushed sufficiently fine is immediately sifted out and removed from further crushing. Also each pair of rolls cleans up its own oversize, that is the particles which are not crushed sufficiently fine by their first passage through a pair of rolls are returned to the same pair until they are so crushed.

§ 781. ELMORE OIL CONCENTRATION MILL AT THE GLASDIR MINE, DOLGELLY, WALES.[334]—Capacity 50 tons per day (probably 24 hours). The ore consists of the economic mineral chalcopyrite, finely disseminated, and a gangue of hardened

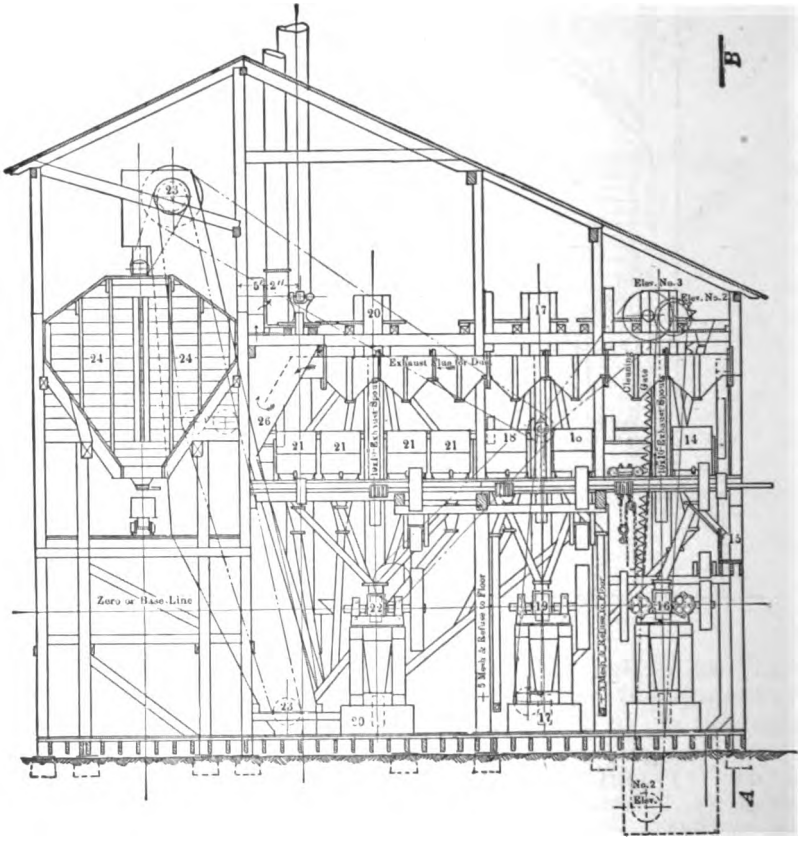

FIG. 524*d*.—SECTION OF CRUSHING PART OF MILL 94 ON *CD* OF FIG. 524*e*.

slate. The problem is to save the copper and its accompanying gold and silver. The ore is delivered to (1).

1. A Comet breaker. To (2).
2. A trommel. Oversize to (3); undersize to (5).
3. Jaw breakers. To (4).
4. Rolls. To (5).
5. From (2) and (4). Three 5-foot Huntington mills using screens with No. 6 needle slot, equivalent to 30 mesh. To (6).
6. Four No. 1 mixing drums, to which oil is added. To (7).
7. Four No. 1 small settling boxes. Spigots to (8); overflow to (12).
8. Four No. 2 mixing drums, to which oil is added. To (9).
9. Four No. 2 small settling boxes. Spigots to (10); overflow to (12).

10. Four No. 3 mixing drums, to which oil is added. To (11).

11. Four No. 3 small settling boxes. Spigots to waste dump; overflow to (12).

12. From (7), (9) and (11). Two No. 4 large settling boxes. Spigots to waste dump; overflow to (13).

13. Two large centrifugal hydro-extractors with solid baskets. Water and oil, as overflow, to (15); mineral, in the baskets, to (14).

14. One small hydro-extractor with perforated basket. Mineral, in the basket, to smelter; oil and water, through the perforations, to (15).

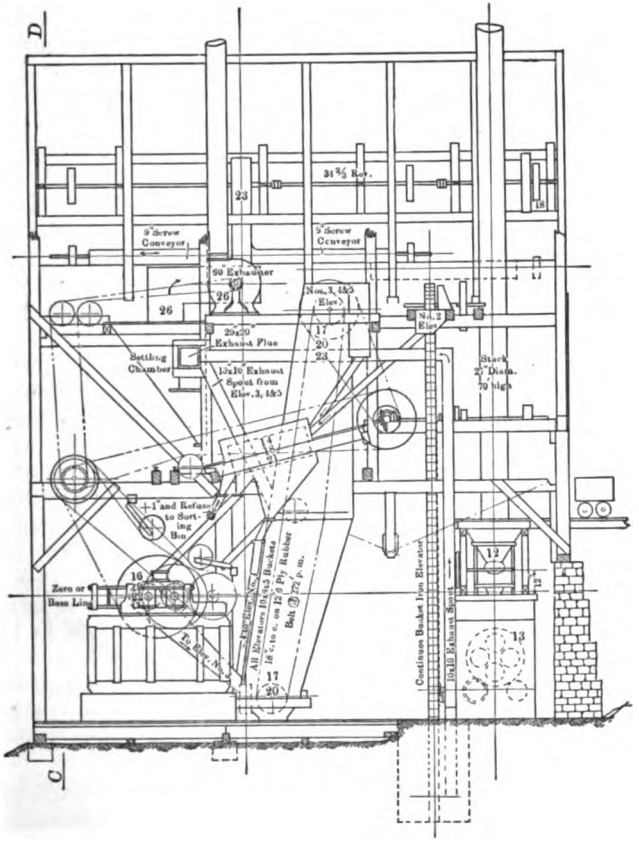

FIG. 524*e*.—SECTION ON *AB* OF FIG. 524*d*.

15. Settling tanks for oil. Oil pumped up to four storage tanks to be used over; water settles to bottom and is run off periodically to waste.

One set of figures on the low grade ore shows it to contain 0.04 ounce gold and 0.7 ounce silver per ton of 2,000 pounds and a little over 1% copper. For further data on the work of this mill see § 617.

§ 782. CHROMITE.—This is commonly associated with a serpentine gangue and the difference in specific gravity is sufficient to allow a good separation. Fine dissemination is the rule and this makes fine crushing necessary (20 to 40 mesh) and produces middlings which are difficult to treat. Moreover the deposits are irregular and their extent does not warrant anything more than a simple mill, something after the style of Mill 50.

The practice in various parts of the world is as follows: In Austria, a rock

breaker and gravity stamps do the crushing while the washing is done in trough washers. In New Caledonia the gangue is soft and trough washers alone are used without any previous crushing; one operator uses also a round buddle to treat the tailings of the trough washers. A mill in California had a rock breaker, a 6-foot Huntington mill and four Woodbury vanners. In some of the Canadian mills the coarsest of the crushed ores is jigged while the finer material is treated on tables of the Wilfley type.

§ 783. THE DRESSING OF QUICKSILVER ORES.—The chief mineral of quicksilver is cinnabar, which although of high specific gravity, is yet so soft that it slimes badly when crushed and causes a large loss whenever wet concentration is attempted. Moreover with the modern furnaces the cost of extracting quicksilver from its ores without concentration is stated to be no more than the cost of concentration alone. For these reasons the only treatment given to quicksilver ores in this country is to crush them in jaw breakers and dry them. They are then ready for the furnace.

At Idria, Austria,[847] the method of preparing the ore for the furnaces is to crush it dry in rock breakers and then to subject it to hand picking and sizing by screens. Average figures show that out of 100 tons of concentrated material there are 41.5 tons of coarse material (over 20 mm.) assaying 0.35% quicksilver. 54.1 tons of fine material assaying 0.67% quicksilver and also 4.4 tons of high grade stuff assaying 8.4% quicksilver. During the last year recorded the undressed ore was raised from 0.6% quicksilver to an average of 0.85% by the dressing.

Wet concentration has been used upon quicksilver ores in Tuscany. At the Cornacchino mine[165] the ore was first treated in washing troughs to remove the fines. These were settled in a labyrinth and according to their quality they were sent either to the furnaces or to the rectangular slime table mentioned below or to waste. The coarse ore from the troughs was sized by a 10-mm. trommel and the oversize hand picked into ore for the furnaces and waste to the dump, while the undersize was treated on hand jigs which yielded coarse concentrates to the furnaces, hutch product to the rectangular slime table and tailings to waste. The slime table made products of different grades to different furnaces. The mill contained 15 trough washers, 16 hand jigs and 4 rectangular slime tables and employed 45 women and 4 men. Its capacity was 20 to 40 tons in 11 hours. The ore was very rich, the heads of the slime tables containing from 15 to 35% mercury. Tailings of the slime tables contained 0.49% mercury and the jig tailings contained 0.97% mercury. At the present time these tailings can be roasted at a profit and the presumption is that concentration is no longer practiced, but the author is unable to state so positively.

§ 784. GRAPHITE DRESSING.—This differs from the usual problem in ore dressing in that the values are lighter than the waste. Graphite possesses two properties which allow the use of special processes in its separation. Its softness causes it to crush finer than the gangue and this together with its low specific gravity makes a separation possible by disintegration followed by settling or elutriation. The tendency of graphite in many cases to break into flakes when crushed while the gangue breaks into rounded particles makes a separation possible by disintegration followed by screening.

Near Passau, Bavaria, Germany, there is a deposit of graphite associated with gneiss, quartz and feldspar.[161] After a certain amount of hand picking, the softer ore is ground in horizontal mills of the buhrstone type and the harder ore by stamps or edge stone mills. The graphite on account of its scaly form is not ground so fine as the other minerals, and can, therefore, be separated by sifting on bolting silk or by using an air blast. The concentration is done dry. The product is high grade but there is a large loss in the tailings. The best ore con-

tains 53.8% graphite and the best concentrates contain 89.2% graphite. The tailings vary from 22.3% graphite in the poorest to 36.8% in the richest. The impurity remaining in the concentrates is chiefly mica which does little harm.

In Austria,[142 and 341] which is the largest graphite producing country in the world, some of the ore needs only hand picking or cobbing while other ore has to be concentrated by grinding in edgestone mills with water and passing the pulp over a series of settling tanks. The following description of a mill in Bohemia illustrates the process. The ore occurs in gneiss for a matrix and contains graphite, kaolin, calcite, quartz and pyrite. It is ground to fine pulp in two edgestone mills and then passed over six settling tanks for sand, each 1.5 m. long, 1 m. wide and 1 m. deep. The gangue settles in these and is removed periodically to waste. The overflow passes on to eighteen settling tanks for graphite, each 6 m. long, 1 m. wide, and 1.5 m. deep. The graphite is allowed to accumulate in these to a certain height, and then the water above the settlings is drawn off to waste and the graphite slime is discharged to the filter presses. The best graphite comes from the last tank and the quality deteriorates from the last tank to the first. Usually only three grades of product are made so that the products of several neighboring tanks are thoroughly mixed together before going to the filter presses. The slime is pumped through the big presses under a pressure of six atmospheres (88 pounds per square inch) and each press yields in 12 hours 1,800 to 2,400 kilos of graphite in cakes containing 20% moisture. A press is discharged every 3 or 4 hours. The cakes are dried at 90° to 100° C. for 24 or 30 hours and then crushed dry in edgestone mills and sized for the market. In Southern Bohemia the best grades produced by this method contain 80 to 95% carbon, while in Moravia, where the ores are of poorer quality, 55% carbon is quoted for the best grade.

The method of graphite dressing at Ticonderoga, New York, which is the source of most of the American output, is not known to the author. The ore contains about 10% graphite and the concentration saves only 50% of this.

At the mill of the Philadelphia Graphite Company at Chester Springs, Pennsylvania, the graphite ore is crushed in rolls and then concentrated in a form of log washer. The concentrated graphite is again ground by rolls and prepared for the market by air blast and sizing screen. The average rock is said to contain 28% graphite but rock with 10% can be treated with a profit.

The process of graphite dressing in Alabama is copied after the Austrian mills, that is, fine crushing followed by concentration in settling tanks.

§ 785. CLAY AND KAOLIN WASHING.—The impurities to be removed are sand and pebbles of quartz, pyrite, mica and limestone and sometimes roots. The principle of the separation is to thoroughly disintegrate the clay with water—sometimes a preliminary crushing is necessary—and then to float off the fine clay to settling tanks and leave behind the impurities which are too heavy to be carried by the water. Dry screening with fine screens has been used to some extent to remove the coarse impurities but the washing process is generally preferred as being more effective. Since the nature of the impurities may vary in different deposits and since there may also be a variation in the quality of the product that it is desired to obtain, it follows that no one machine or set of machines will be suited to all deposits. For example, brick clays will not require such careful treatment as fine kaolin.

For the preliminary crushing, when practiced, the best machine seems to be the "dry pan" which is an edgestone mill with a perforated bottom through which the crushed material is discharged. Rolls have been used but are not so satisfactory. Instead of crushing the material the same result may be obtained by "weathering" it, that is spreading it out in thin layers and letting it be acted on by air, water and frost for several months.

The disintegrating or washing machines proper may be divided into two classes, the basin washers and the horizontal washers. The basin washers, of which there are several types, all consist of a cylindrical basin 2 or 3 feet deep and 10 or 12 feet diameter, in the center of which is a revolving vertical shaft to which are attached radial arms carrying vertical stirrers. A sectional view of a basin washer together with the centrifugal pump which lifts the overflowing slime to the settling tanks is shown in Fig. 525. The action of the stirrers and the water thoroughly disintegrates the material and the clay and very fine sand overflow with the water, while all coarse impurities settle to the bottom. The machines may be run with continuous feed or overflow or they may be charged and discharged intermittently. Their disadvantages are: (1) they have to be stopped periodically to remove the accumulation of coarse material in the bottom unless they are equipped with continuous bucket elevators for this purpose; (2) the water has to do a considerable part of the work and the machine works slowly. The horizontal washers, called slumming machines, include special forms of horizontal log washers and wash trommels which have

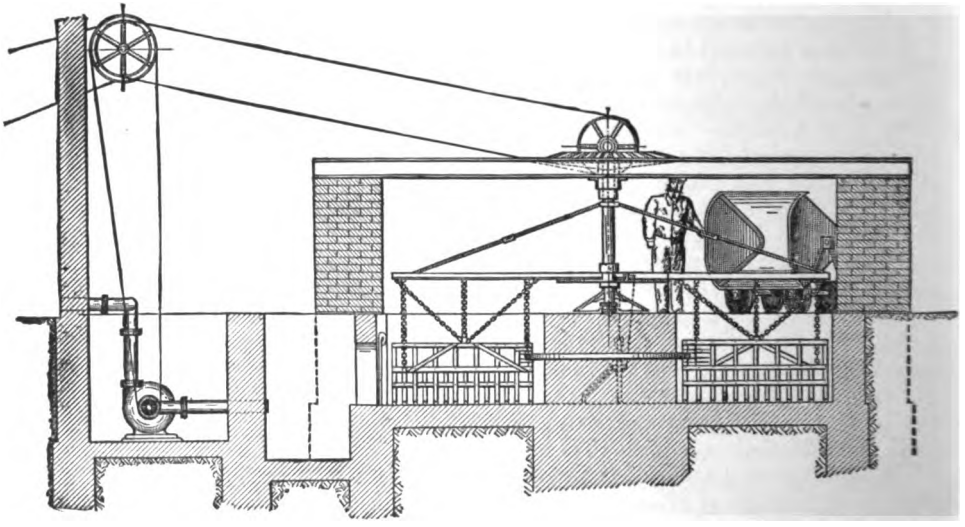

FIG. 525.—SECTION OF A BASIN WASHER.

the material fed at one end and the fine clay and water overflow at the other. The impurities are left in the machine to be cleaned out periodically. The capacity of washing machines varies from 30 to 300 cubic meters per hour. For best results the feed and the water should be kept as constant as possible in order to have the outflowing slime of the same consistency.

The slime from the washers usually passes first through a screen to remove any floating sticks, etc., and then it is carried in troughs to the settling tanks. If the slime is of the proper quality as it leaves the washer, then these troughs are steep and of narrow cross section to act the part of launders and the water quantity should be only four or five times as much as the clay. If, however, the slime still contains some fine sand which it is desirable to remove, then these troughs are made with slight slope and of good width being best divided into sections with each succeeding section double the width of the preceding and having longitudinal partitions to keep the current uniform. In this last case the water quantity is higher, up to thirty times as much as the clay, and the fine sand settles out just as in a run.

The settling of the clay is done in tanks or pits. The simplest form is an earth excavation with a sandy bottom to soak away the moisture. For fine grades of clay tanks of wood, stone, brick or cement are used, sometimes of porous bricks. Small, shallow tanks have the advantage that the clay dries more quickly in them and the time of filling and emptying them is less. Large deep tanks have the advantages that so much area is not required, and the product will be of a more uniform grade. The settling of the clay is hastened in some plants by putting a few pieces of alum on the screen through which the slime passes as it leaves the washer.

In filling the tank the slime should not be fed at one place, but should be distributed uniformly so as to make the settlings uniform. When the water has settled clear it is drawn off by removing plugs in the side of the tank. The depth of the clay deposit in the tanks varies from 8 to 20 inches. German practice fills a tank from one to four times a year. At an American brick making plant there was one slumming machine and fourteen settling tanks each with a capacity of 1,200 to 1,400 cubic feet of clay. The capacity of the plant was 25,000 to 30,000 bricks per day, and as 1 cubic foot of clay yields twenty bricks, each tank must have been filled and emptied every fourteen days.

The drying of the cheaper grades of clay is done by turning it over by shovel from time to time in the tanks, and when it is nearly dry it is removed to racks to finish the drying, or to some form of drier using heat. The more valuable grades will allow the use of filter presses and driers.

The sand which is separated out from the clay is often valuable, being used to make ground flint for potteries or to make silica brick. It is not possible to remove all fine scales of mica by this washing process. At one plant this difficulty was overcome by screening the dried material on fine bolting cloth.

At the kaolin deposits of Cornwall and Devonshire, England, it is common to have a small vertical shaft in the kaolin, connected with another larger shaft outside of the deposit by means of a tunnel at the bottom. In the small shaft is placed a wooden pipe having in one of its sides four 1-inch holes, 12 inches between centers vertically, and the space outside the pipe is filled with clay rammed down. A small pit is dug about the upper end of the pipe and the kaolin is washed into this pit from all sides by running water, the material being first loosened with picks. The heavier sand (from 3 to 8 tons to each ton of kaolin) settles in the pit and is regularly removed in a car, while everything else passes through the holes of the wooden pipe, down and through the tunnel, and is then pumped up the large main shaft and sent to the troughs and settling tanks. Where the lay of the land will permit, the pulp runs out of the tunnel by gravity to the troughs; and a second shaft, made near the first, instead of at some distance, is used to deliver the coarse sand from the pit into the tunnel and away to a dumping ground. The troughs are called "micas," and are 1 to 2 feet wide, about 6 inches deep and 20 feet or more long. The slime or "slip" runs first into one trough, which discharges into two other troughs of the same dimensions, and so on. The troughs have plugs in their bottoms to draw off the sand and mica periodically. The settling tanks are circular and are sometimes 30 to 40 feet in diameter and 7 to 10 feet deep. On the side opposite the inlet there is a gate having a vertical set of holes which serve as overflow for the clarified water. As the deposit of kaolin builds up, these holes are successively plugged. When a tank is full of kaolin the "slip" is turned into another tank and the gate on the discharge side of the first tank is removed. This allows the upper liquid part of the deposit to run into a large, square draining tank, and the rest is discharged by hoes with the aid of a small stream of water. It is allowed to drain to the consistency of cream cheese, when it is removed to a drier, which consists of porous tiles laid over

heated horizontal flues, or in some cases it drains in the tank until it is stiff enough to be cut into bricks which are removed and dried on racks, which are roofed over, but are open at the sides.

§ 786. CORUNDUM AND EMERY DRESSING.—The problem here is to remove the impurities and at the same time preserve the sharp edges and corners of the mineral grains. The usual method of procedure, after the preliminary breaking, is to treat the material by the so-called "muller" process, using a form of washing pan with wooden rollers (see § 265) the action of which is the grinding of one particle against another, whereby the talc, chlorite, mica, etc., are worn off from the harder mineral, and removed by a stream of water.

At the works of the International Emery and Corundum Company, Corundum Hill, North Carolina,[397] the material is that known as *sand* corundum, being mostly fine sand with some pieces 1 inch or more in diameter. The gangue is soft chlorite and vermiculite plates and scales. The first step is to subject the ore to the scouring action of a stream of water as it is being sluiced 1½ miles from the mine to the mill. This action is increased by several vertical drops of 5 to 10 feet in the sluice. After reaching the mill, what will not pass through a 14-mesh screen is crushed in rolls until it will pass through, and, with the undersize of the screen, is stirred with hoes in a washing trough which washes off the light stuff to waste. The final cleaning of the residue is done by the "mullers" mentioned above. The concentrates of these are drained, dried and sized on a 14-mesh screen, and the undersize is shipped to the emery mill at Chester, Massachusetts, described below, where it is graded into sizes for the market; the oversize of 14 mesh goes back and is put through the mill again.

At this same place the *block* corundum occurs mixed with tough hornblende, feldspar and gneiss. The few large blocks are broken by heating and quenching with water, and all is crushed by breakers and rolls to pass through a 14-mesh screen. It then goes to a form of double horizontal log washer, called an "auger," fed at the middle and discharging at both ends. From this point on, the treatment by washing troughs, "mullers," etc., is exactly the same as in the preceding case, and it is also shipped to Chester for grading.

Some corundum mills are built along the style of simple jigging mills. The *mill of the Canada Corundum Company, Limited*, in Raglan township, Ontario, is as follows: The ore, which contains the corundum associated with magnetite and mica in a feldspar gangue, comes to (1).

1. No. 1 or mill bin. To (2).

2. A Gates breaker, No. 2. By No. 1 bucket elevator to No. 2 or ore bin and thence to (3).

3. From (2) and (4). One pair of Gates Economic rolls, 24 × 14 inches. By No. 2 bucket elevator to (4).

4. One No. 1 trommel. Sectional with 5, 8 and 11-mm. holes. Over 11 mm. to (3); through 11 on 8 mm. to (7); through 8 on 5 mm. to (8); through 5 mm. to (5).

5. One No. 2 trommel. Sectional with 1.5 and 3-mm. holes. Over 3 mm. to (9); through 3 on 1.5 mm. to (10); through 1.5 mm to (6).

6. Classifier. Spigot to (14); overflow to slime tank.

7. From (4). No. 1 Harz jig using 9½-mm. sieves. Concentrates to (11); tailings to waste.

8. From (4). No. 2 Harz jig using 6½-mm. sieves. Products like (7).

9. From (5). No. 3 high speed jig using 4-mm. sieves. Product like (7).

10. From (5). No. 4 high speed jig using 2½-mm. sieves. Products like (7).

11. From (7), (8), (9), (10), (12), (18). One pair of high speed Colorado rolls, 30 × 6 inches. To (12).

12. One No. 3 trommel with 1 and 1.5-mm. holes. Over 1.5 mm. to (11); through 1.5 on 1 mm. to (13); through 1 mm. to (14).
13. Wilfley table. Heads to (15); tailings to waste.
14. From (6) and (12). Bartlett table. Heads to (15); tailings to waste.
15. From (13) and (14). Drier. To (16).
16. Magnetic separator. Magnetite to waste; corundum to (17).
17. Splitters (screens) with 30, 80 and 90-mesh holes. Over 30 mesh to (18); through 30 on 80 mesh to (19); through 80 on 90 mesh to (22); through 90 mesh to (21).
18. Graders (screens) with 12, 14, 16, 20 and 24-mesh holes. Over 12 mesh to (11); the rest of the sizes are finished products.
19. From (17). Graders (screens) with 30, 36, 46, 54, 60 and 70-mesh holes. Each size separately to (20).
20. Hooper jig. Heads are finished products; tailings to waste.
21. From (17). Graders (screens) with 90, 100, 120, 150, 180 and 200-mesh holes. Each size separately to (22).
22. From (17) and (21). Wilfley table. Heads to (23); tailings to waste.
23. Drier. To (24).
24. Graders (screens) with 80, 90, 100, 120, 150, 180 and 200-mesh holes. Finished products.

The output is about three tons of concentrates per day.

At the emery mine of the International Emery and Corundum Company at Chester, Massachusetts, the emery occurs associated with chlorite and talc schists and magnetite. The crushing is done by spalling followed by a Blake breaker and two pairs of rolls, the last one of which puts the stuff through a limiting sieve. During the spalling some barren rock is picked out to waste. The scouring or washing is done by the "mullers." The grading of the concentrates after they have been drained and dried is done by nine screens. Three of the screens divide the material into four sizes and then each of the three finer sizes is further subdivided by two screens into three sizes, thus making a total of ten sizes. Each size receives a winnowing treatment with an air blast to remove the chlorite and also a treatment by a magnet to remove the magnetite.

In general the grading of emery and corundum is to make usually twenty-four sizes ranging from 8 mesh to 100 mesh. The stuff is usually first divided at about 60 mesh and the oversize and undersize are further subdivided. In addition to the final cleaning by winnowing and magnetic treatment the finer sizes are often cleaned by elutriation. For this there is a series of metal cylinders about three feet high and ranging from three inches diameter for the first to forty inches for the last. These are filled with water and connected by pipes near their upper edges. The material is made to flow over the tops of these beginning with the smallest just as in a box classifier. Stuff will settle in each cylinder and form a stratum of heavy corundum overlaid with a stratum of light waste. By draining off the water this stratified cake can be taken out whole and divided by a knife into clean product and waste.

§ 787. Asbestos Dressing.—Around Thetford in the Province of Quebec, Canada, is located a large asbestos industry. The asbestos is the fibrous form of serpentine called chrysotile and occurs in veins in serpentine. It is mined in open pits and the waste rock and the valuable material are hoisted out separately, the former going to the waste dump and the latter to the dressing works. In the simplest plants the ore undergoes only a cobbing to remove the waste rock and to make two or three grades of marketable product. Many mills are more elaborate and that at Kings Brothers' Mines at Thetford[175] is as follows:

The waste rock is hoisted and trammed to (1), the valuable material is hoisted, trammed to a self-dumping skip and thence raised and dumped in front of (2).

1. Waste dump. Boys cob this material and recover some asbestos to (10).
2. Blake breaker, crushing to ¾ inch. To (3).
3. Inclined screen with 1.6-mm. square holes. Oversize to (4); undersize probably to waste dump.
4. A traveling belt picking table with a division along the center. Barren rock from one side to waste dump; valuable rock from other side to (5).
5. A pair of rolls with loose springs. To (6).
6. A series of three inclined shaking screens having 1.6-mm., 12.7-mm., and 19.1-mm. holes. Over 19.1 mm. (No. 1 asbestos) to (10); through 19.1 on 12.7 mm. (No. 2 asbestos) to (7) to secure a more uniform product; through 12.7 on 1.6 mm. (No. 3 asbestos) to (10); through 1.6 mm. ("waste" asbestos) by chain elevator to (10).
7. A screen with 6.35-mm. holes. Oversize to (8); undersize, probably "waste" asbestos, to (10).
8. Cyclone pulverizer, to (9).
9. Screening and suction apparatus (see § 601) using an 11-mesh screen. Oversize ("fibre," amounting to about 35%) to (10); undersize (about 65%) barren rock to waste dump.
10. From (1), (6), (7), (9). The different grades are used as follows: No. 1 has the longest fibre, and is especially valuable for spinning; No. 2 is also used for spinning; No. 3 is used for the manufacture of mill board, etc.; "Waste" has a larger proportion of sand and is used for bricks, cement, etc.; "Fibre" is very soft and is used for steam packing, etc. These products may be put through a combing machine consisting of a pair of toothed rolls which have a sidewise motion in relation to one another as well as the revolving motion and this removes some more of the waste rock.

The average of the district is about one ton of asbestos from 100 tons of rock. The rock left in the asbestos varies; in one grade it ranged from 5 to 40%.

§ 788. DIAMOND WASHING.—The seat of the greatest diamond mines in the world is around Kimberley in South Africa, and the industry is under the control of the De Beers Consolidated Mines. The "blue ground" in which the Kimberley diamonds occur is called "kimberlite." Its matrix though difficult to determine, is probably an altered peridotite, and the chief minerals imbedded in it in addition to the diamond are garnet, olivine, mica, ilmenite, calcite, zircon, magnetite, and occasionally pyrite. Sometimes also fragments of black slate are found. On exposure to the air the rock disintegrates, especially if wetted, and on this property is largely based the method of treatment. The ore hoisted to the surface is dumped into trucks, each holding 20 cubic feet, and hauled by endless wire rope haulage to the "floors" (see § 616). The De Beers "floors" are divided into sections each 600 yards long and 200 yards wide, holding 50,000 loads. A load is 16 cubic feet or about 1,600 pounds and makes a layer 10 inches deep over an area of about 21 square feet. The weathering takes about a year for rock from the De Beers mine, but only about half this time for rock from the Kimberley mine. The weathered rock ("yellow ground") goes to one mill while the remaining unweathered lumps of hard "blue" go to another mill.

At the Kamfersdam mill which is treating weathered rock the material is dumped over grizzlies with 3-inch spaces. The oversize goes through Comet breakers and with the undersize passes with water through double sets of rolls. These rolls are 48 inches diameter, 30 inches corrugated face and make 45 revolutions per minute. The upper rolls of each set are 1¾ inches apart and the lower are ¾ inch apart. The product is elevated to trommels with ¾-inch holes, the undersize of which goes to the upper row of washing pans (see § 265) while the oversize goes to the fine rolls together with the tailings from these pans. These rolls are 72 inches diameter, 30 inches face and set $\frac{3}{16}$ inch apart. They

deliver by a bucket elevator to a second row of washing pans or safety pans which make tailings to waste, and concentrates, which, together with the concentrates from the upper row of pans, go to the "pulsator house." Some of the plants use only one set of pans.

The hard "blue" which will not disintegrate on the "floors" is treated in a separate mill. In the De Beers plant for this purpose the rock is broken to 2 inches in Comet breakers and goes thence to trommels. The oversize goes to circular sorting tables to guard against large diamonds being crushed, though no diamonds of any consequence have been picked out on these tables. Following the tables is a series of rolls, trommels and jigs, the prevailing jig sizes being $\frac{5}{8}$, $\frac{1}{2}$, $\frac{3}{8}$, $\frac{1}{4}$ and $\frac{1}{8}$ inch. In each case the hutch products of the jigs go through rolls to finer jigs. The tailings of the jigs are waste. This mill treats about 900 tons of rock per day and sends 8 or 9 tons to the "pulsator house."

In the "pulsator house" the concentrates from the washing pans and hard "blue" jigs are sized in trommels having holes $\frac{3}{8}$, $\frac{1}{4}$, $\frac{3}{16}$, $\frac{1}{8}$ and $\frac{1}{16}$ inch diameter. Everything larger than $\frac{3}{8}$ inch is hand picked; everything smaller than $\frac{1}{16}$ inch is thrown away. The intermediate sizes are jigged through beds of lead bullets. The tailings of these jigs are waste and the hutches go to the picking house, the amount of the concentrates being 250 pounds from 100 tons of mine ore.

In the picking house the diamonds are recovered from the concentrates either by hand picking or by greased tables (see § 617). The picked diamonds are washed in sulphuric or nitric acid and then sorted according to color.

The New Bulfontein Diamond Company, which erected a plant to treat the rock direct without preliminary weathering, found that in the direct treatment some of the diamonds were broken in the rolls and the tailings contained 30% more diamonds than where the material had been previously weathered.

The report of the De Beers Consolidated Mines for the year ending June 30, 1900, shows the following: loads of blue ground hoisted, 2,653,784; loads of blue ground washed, 2,259,037; loads on floors at close of year, 4,062,908; diamonds found, carats,* 1,221,727; carats per load of "blue," 0.54; per cent. diamonds in the ore, 0.000015. This is only about one-half the production of the previous year owing to the Boer war.

Other precious stones are recovered in some parts of the world by a simple washing process. For example, in Montana sapphire bearing rock is first disintegrated by weathering and then screened and washed in sluices containing riffles. The concentrates from the sluices are further concentrated in a rocker and the product of this is hand panned and hand picked.

§ 789. TIN DRESSING.—This metal usually occurs as oxide in the form of cassiterite or tinstone, the specific gravity of which is sufficiently high to admit of an easy separation of the mineral and gangue.

Cornwall is the seat of the oldest tin dressing operations. Here the cassiterite is associated with arsenopyrite, pyrite, chalcopyrite and wolfram in a hard gangue of quartz, chlorite and schist. The scheme is to first remove the gangue, second to roast the residue to change the sulphides to light oxides or sulphates, and finally to wash again, leaving a residue of cassiterite and wolfram. The latter is generally not present in sufficient quantity to do much harm. Various processes have been tried for its removal but without great success. The most successful was to roast with sodium carbonate, and leach out by water the sodium tungstate which was recovered and sold. Any arsenic in the ore is changed to oxide and volatilized during the roasting, and then condensed in chambers. When copper is present, which is rare, the roasting changes it to sulphate which is leached out by water and precipitated on scrap iron.

* One ounce Troy contains 151.5 carats.

An outline of the *Levant mill, St. Just, Penzance,*[412] will serve to illustrate the process:

1. The ore is broken by rolls to the size of the fist, hand picked to remove waste, and to make different grades varying in richness, and then crushed in gravity stamps. The stamped material goes to (2).

2. Round buddles. Heads to (6); middlings to (3); slimes to (11).

3. Round buddles. Heads to (6); middlings to (4); slimes to (11).

4. Round buddles. Heads to (6); middlings to (5); slimes to (11).

5. Round buddles. Heads to (6); tailings to waste; slimes to (11).

6. From (2), (3), (4), (5) separately. Kieves. Bottoms or heads, containing 6 or 7% copper and 10 or 12% tin, to (8); tops to (7).

7. Round buddles. Heads re-treated on kieves; slimes to (11).

8. From (6), (12). Roasting furnace. Arsenious oxide volatilized and caught in condensing chambers; roasted product to (9).

9. Leaching with water. Solution containing copper goes to scrap iron while the suspended slimes are settled and treated on frames and then by kieves for tin; leached residue to (10).

10. Round buddle. Heads are kieved; tailings containing 5 or 6% copper are stamped and treated on a round buddle yielding heads of cassiterite and tailings of copper ore.

11. From (2), (3), (4), (5), (7). Settling pits. Settlings treated on frames yielding heads to (12) and tailings to waste.

12. Kieves. Bottoms to (8); tops back to round buddles.

Three-fourths of the total tin concentrates come from the first buddle. The final concentrates or black tin contain 65% metallic tin.

In general in this district spalling is used instead of machine breaking. The spalled ore contains, on an average, about 1½% metallic tin. The stamps used are the old Cornish gravity stamps, California gravity stamps, or Husband pneumatic stamps, all using a screen with 0.5 or 1-mm. holes. In some mills the stamped ore goes to runs, called strips, which work intermittently and yield heads, middlings, tailings and slimes. The first three products are washed out separately by little streams of water to the round buddles. The Dolcoath strips are 10 m. long, 0.5 m. wide, and 0.5 m. deep, and there are 9 strips for 12 stamps, 2 of which are always being emptied. At Wheal Grenville *spitzkasten* are used to classify the pulp between the stamps and the round buddles. The buddles used are of both the convex and concave type. For recrushing middlings various forms of pulverizers (Tregoning, Bartle and Nicholas) are used as well as stamps. The roasting furnaces are generally of the Brunton revolving type, sometimes of the reverberatory type.

The Dolcoath mill[333] has recently installed Frue vanners. The ore is broken to 1½ inches and then stamped through 27 wire mesh at the rate of 125 tons per day. Twelve 6-foot Frue vanners receive the pulp direct from thirty gravity stamps crushing rich ores, while fifteen 6-foot Frue vanners receive pulp direct from thirty gravity stamps and two Husband stamps (each equal to ten gravity stamps) crushing poor ores. The scheme is a single treatment on the vanners. The vanner heads are roasted and further washed, while the tailings are classified into coarse material and slimes; the former goes to a further concentration and pulverization; the latter go to frames, the heads of which are settled and re-treated on revolving buddles. The average vanner concentrates have 50% black tin which contains 65% metallic tin. Tailings in this mill contain three pounds of metallic tin per ton or 0.13%.

Tailings plants[308] find an application after the Cornwall mills, since a considerable amount of slime tin is lost by the mills. These plants are scattered six miles along the Red river from the mills to the ocean. The mode for operation

for slimes is to dig a series of settling pits, 100 to 250 feet long, 6 to 10 feet wide and 6 to 10 feet deep. The stream is allowed to flow into these and settle. The clear water is drawn off and used to drive a water wheel, and for the automatic washing of the frames. The settled slime is washed out with a small stream of water over the first or "rag" frames, which yield tailings, back to the river; and heads, which are washed off every three or five minutes into little settling boxes. The enriched material is then elevated by scoop wheels to the second frames, the heads of which are again treated on the third or cleaning frames. The heads of the third frames are elevated to concave revolving slime tables. These are 18 feet in diameter, revolve once in 6 or 7 minutes, treat 3 tons in 10 hours, and yield heads to be roasted and again treated on round tables until they are rich enough to ship. The frames are 6 or 7 feet long, about 6 feet wide, and slope about 3 inches per foot. The "rag" frames treat from ½ to 2 tons per day, and there is generally one second frame to four "rag" frames, and one cleaning frame for four second frames.

Some of the tailings plants also treat sands from the river. These are caught in settling tanks, and the settled sand goes to runs yielding lower part or tailings, back to the river; and upper part or heads, washed to fixed convex buddles. The tailings of the buddles go back to the river while the heads are pulverized in rough ball mills and again treated on round buddles. The heads of these buddles are roasted. At the Trevarns (Camborn) plant 50 tons of settled sand, yielded 10 tons of stuff to be pulverized which was further reduced to 0.333 ton to be roasted. The roasting and final washing again reduced this to 0.083 ton of black tin containing 65% metallic tin.

The economic results of the Cornish mills are very hard to obtain since all products are estimated by the vanning shovel. One quotation gives the amount saved at the mill as 89%, that saved by the tailings plants as 9.3%, and the amount finally lost as 1.7%. These figures are probably better than is actually done.[412] The statistics show that in the year 1890, 7,558 tons of black tin were produced by the mills on the Red river, and 1,302 tons were produced by the tailings plants, or, in other words, the tailings plants saved an amount equal to 17% of that which the mills saved. The author has been unable to find accurate data to show just how much tin finally escapes both the mills and the tailings plants and goes into the ocean.

At Mount Bischoff, Tasmania,[358 and 319] the ore contains sulphide and oxide of tin, iron pyrites and iron oxide. It is broken to 2½ inches by a jaw breaker at the mine, and taken 1¼ miles to the dressing works where it is crushed by gravity stamps weighing 560 pounds, dropping 8 inches, and using screens with 14 meshes per linear inch. The stamped ore is sorted in Rittinger *spitzlutten* into two jig sizes and an overflow product which is collected in settling tanks and fed to convex revolving slime tables. The jig sizes go to 2-sieve bedded jigs yielding first hutch which is smelting ore, second hutch which is raised by hydraulic jets to the finishing jigs, and tailings which are cleaned on buddles, the concentrates of which are ground in a Chili mill. The finishing jigs make second class smelting ore and tailings. These tailings are ground in a Chili mill and together with the product of the Chili mill previously mentioned, go to classifiers. The spigot of the latter goes to round concave buddles and the overflow goes to revolving slime tables. The concentrates from these buddles and tables are further cleaned in kieves. The tables that treat the overflow of the *spitzlutten*, make concentrates that are re-treated on other tables and finally kieved, while the tailings are led to settling tanks and thence to buddles. The concentrates from the latter are rebuddled and finally kieved. The mill contains 75 stamps, 30 two-sieve Harz jigs, 39 convex revolving tables 10 to 15 feet diameter, and 15 concave buddles 20 feet diameter. About 6,000 tons of ore

are treated every month yielding on an average 2½%, or about 150 tons of concentrates per month. The final tailings do not contain over 0.5% metallic tin. Seventy-five per cent. of the concentrates comes from the jigs, 15 to 20% from the revolving tables and 4% from the concave buddles.

In Perak in the Malay peninsula[330] the cassiterite in placers is recovered by trough washers and hand jigs; hydraulicking and riffle sluices are also used. For treating the lode tin the Pahang Corporation[331] has a mill of sixty gravity stamps, using screens with 80 to 120 burr holes per square inch, each stamp treating about 2¼ tons per day. The pulp was formerly concentrated by the old Cornish system but now the pulp goes without classification directly to Frue vanners with corrugated belts, there being three vanners for every ten stamps. The ore concentrates contain over 70% metallic tin, the impurities being oxide of iron, a little silica and $\frac{1}{16}$ to $\frac{1}{8}$% copper. The total loss is 5 to 8 pounds of tin oxide per ton (0.22 to 0.36%). On ores with considerable pyrites the vanners yield heads with 25 to 45% oxide of tin which go to calciners, and tailings with 0.13 to 0.22% oxide of tin. Two pulverizers grind 250 tons of poor coarse concentrates per month which go to two Frue vanners with plain belts, yielding clean heads, and tailings with not over 0.27% oxide of tin, when working on concentrates with 10% oxide of tin.

In Bolivia,[332] the per cent. of cassiterite in the ore is quite high. The native system of concentrating is to crush by a Chili mill or a primitive rocking stone mill and concentrate either on square buddles or in washing troughs sometimes supplemented by hand jigs. In the mills which have been erected by foreigners the crushing is done by stamps, ball mills or Huntington mills, and the crushed material is treated on jigs and Frue vanners, or jigs and round buddles; one mill uses the old Cornish system.

BIBLIOGRAPHY OF OUTLINES OF MILLS.

This will be found at the end of Chapter XXI.

CHAPTER XXI.

GENERAL IDEAS ON MILLING.

This chapter includes general principles, accounts and reports, costs and testing.

General Principles.

§ 790. There are certain general principles which apply more or less to all mills and which will now be briefly considered. They deal with such points in the design, location, and the running of mills as are of especial interest to the practical ore dresser. The author will not consider the subject at all fully from the point of view of the mechanical, civil, or electrical engineer—for such information the reader is referred to various treatises on those subjects.

§ 791. Location of Mills.—The following points have to be considered: the distance from the mine; the amount and source of the water supply and its constancy during the whole year; the supply of fuel; the position of the power plant for steam power, water power, or electricity, as the case may be; the accessibility of supplies and the shipment of the products; the room for disposal of tailings; the room for future additions; the safety of the location from floods, snow slides, land slides, etc. The site must be so chosen that the greatest economy will result. For example, when all the other points are favorable it is best to have the mill just below the mine opening. In case, however, the mine is in a somewhat inaccessible place, it may be cheaper to transport the ore to a more accessible spot than to bring water and supplies to the mine.

With a few exceptions, the mills visited by the author are located near the mines, that is, within less than 500 feet, indicating that getting the ore to the mill is the most important factor. The exceptions are the Lake Superior native copper mills which are of sufficient size to make it cheaper for them to haul the ore from one to seven miles by railroad to the shore of the lake to secure an ample water supply, and also dumping place for tailings. Some of the large Montana copper mills also haul the ore to water; for example, Mill 42 hauls 30 miles to water; Mill 38 hauls 170 miles to water and water power.

§ 792. Mill Site.—A study of Figs. 511 to 524 shows that there seem to be three classes: (1) A side hill or terraced site with a steep sloping mill. (2) A flat site with a sloping mill. (3) A flat site with a flat mill.

The side hill site is shown in Fig. 522*a* of Mill 84, which is one of several mills in Utah which carry this policy to an extreme, owing to the fact that they have no space in the town in the valley below for either mill site or tailings dump. They are placed so far up that a dumping place is obtained for the tailings on the hill side below the mill. These Utah mills hoist all the ore from the valley below and pump the water from a distance, in one case 3 miles, in another 18 miles. The advantages claimed for the side hill site are that the ore when once started at the top of the mill follows the various steps of the treatment under the influence of gravity; that the machinery is nearer the ground; that much of the wear and annoyance resulting from the use of elevators in a mill is avoided; and that the tailings pass off by gravity. The disadvantages are that the cost of construction is considerably greater, since excavations have to be made and retaining walls built; that it is not so easy to send stuff back for re-treatment; that the mill is not so accessible either for men to move about inside or for teams to approach on the outside; that the site is inconvenient and inelastic, that is, the machines

have to be arranged in a more or less predestined order and it is hard to make additions which shall be conveniently located with respect to the original.

The flat site with a sloping mill is well illustrated by Mill 40 (see Fig. 519*a*). The advantages of this form are that it saves the expense of excavating and building retaining walls; that it is accessible inside and out; that additions can easily be made to it at any desired point; that it requires no more elevators than the mills built on a gentle slope. The disadvantages are that the ore has to be elevated as a rule at the start; that one end of the mill has to be built up on a frame work; and that it may be necessary to elevate concentrates and tailings.

The flat mill on a flat location is represented by Mill 25 (see Figs. 513*a* and 513*b*). This class has the advantages that it is cheap to construct; that it is easily accessible; that additions can be easily made; and that it is compact and covers less ground than the other forms. The disadvantages are that more elevators are required, which wear out rapidly and annoy the mill man by breaking down; that many of the machines are elevated some distance from the ground; that there may be a lack of light on the under stories; and that concentrates and tailings may have to be elevated. In Mill 25 there are two stories, the upper containing the ore bins, jigs and tables with no overhead machinery to cut off the light; on the lower story are the rolls, screens, pumps, classifiers, tanks, and shafting. In this mill it is claimed that by placing all of the heavy weights at the bottom the heavy framing is confined to the lower story. It is also claimed that, although part of the stuff is elevated several times, yet the total amount of elevating takes less by 20 horse power than it would for a step building.

The usual form of concentrating mill is a single story sloping mill built either on a gently sloping site or on a flat location. In this usual form the ore is received at a height which allows it to pass through the crushing machinery. Then in the majority of cases it is elevated to the trommels and passes through the trommels, classifiers, jigs and fine concentrators, the only re-elevating being of middlings, usually after recrushing, to go either back into the regular system again or to be treated on separate middling machines. In a few exceptions the middlings pass on straight without re-elevating. Some of the mills elevate the concentrates and even tailings. There are also a few instances where, for special reasons, ore is elevated at other points than those just indicated. The mills seem generally to obey Rittinger's rule that the arrangement should be such that the middlings can be carried forward in the shortest and simplest way to the next following manipulation, and that they should not be allowed to descend unnecessarily so as to require corresponding unnecessary re-elevation.

§ 793. In regard to the site of foreign mills, the state of ore dressing is such that a number of the mills existing to-day were designed years ago when it was the custom to put the different departments in separate buildings covering some distance down a gentle slope, perhaps down a valley, in some cases extending to a distance of half a mile and in the tin dressing works at Altenburg even a mile. The mill at Åmmeberg, Sweden (see § 674), built in 1859-61, has all the machines on one floor, and the addition of new parts at different times has given rise to a number of disconnected and independent departments.

Even in some comparatively modern mills, this lack of compactness occurs. Thus, in the new dressing works at Clausthal (see Figs. 518*a* and 518*b*), which started in 1872, the plant stretches out about a quarter of a mile in separate buildings on terraces, the average slope of the site from beginning to end being 6°. The mill at Lauthenthal, started in 1874, also has separate one story buildings extending along a slope. The mill at Laurenburg (see Figs. 517*a* and 517*b*), is built on a slope of 29°, and is much more condensed. It is a combination of the terrace and the story arrangement, one building having three stories, all the others only one. The mill at Ramsbeck has also a compact arrangement

of buildings of more than one story on a terrace. The Silberau mill at Ems, started in 1862, (see Fig. 526), is a single story mill in three divisions built on a flat location, while the new Himmelfahrt mill at Freiberg (see Figs. 527*a* and 527*b*), built about 1890, is an example of a mill with five stories built on a flat location. The ore is raised to the top and then passes successively

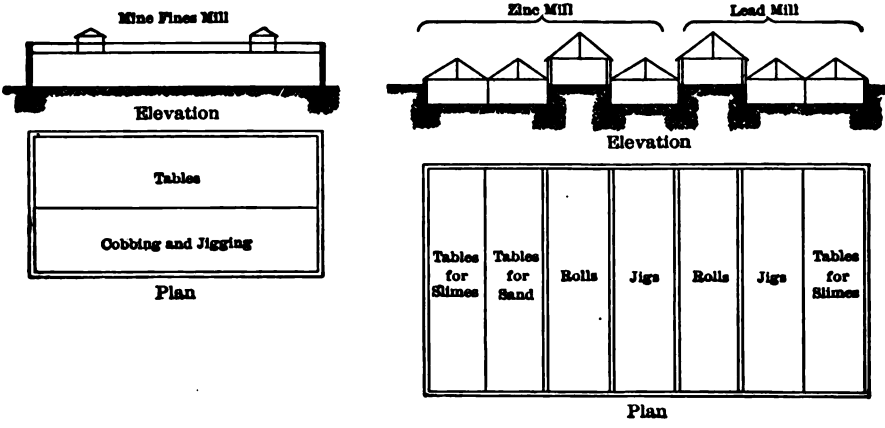

FIG. 526.—SILBERAU MILL AT EMS. SCALE = $\frac{1}{1350}$ SIZE.

down the various stories under the influence of gravity. The Neue Helene mill, built about 1886, near Beuthen in Upper Silesia, is a storied mill very similar to the Himmelfahrt. The preceding examples indicate that although many foreign mills exist to-day which cover a large extent of territory, yet the tendency seems to be to make the mills more compact, that is, to put the buildings closely together on terraces where a slope is available or, when a slope is not available or

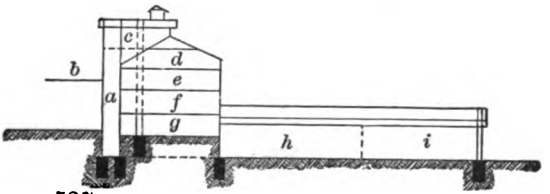

FIG. 527*a*.—ELEVATION OF HIMMELFAHRT MILL.

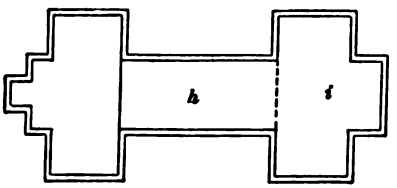

a. Hoist.
b. Waste track.
c. Receiving floor.
d. Grizzly and breaker floor.
e. Cobbing and coarse rolls floor.
f. Coarse jigs and medium rolls floor.
g. Medium jigs, fine rolls and stamps.
h. Fine jigs.
i. Tables for slimes.

FIG. 527*b*.—PLAN.
SCALE = $\frac{1}{1350}$ SIZE.

is insufficient, to make up for the lack of it either entirely or in part by the use of stories.

§ 794. PLANT.—In addition to the mill itself, other buildings are necessary. The power house is, as a rule, located in a little building joined to one side of the mill. The carpenter shop, machine shop and blacksmith shop usually serve not only for the mill but for the mine, especially in small plants where the mill is near the mine. In some cases, as at Mill 38, these shops serve the mill and smelter. The three shops may be all in one building or more commonly the blacksmith shop and the machine shop may be in one building eith

together or separated by a partition, while the carpenter shop is in a separate building. As a rule, these shops are not very elaborate, their equipment being generally confined to one or more drills, lathes and planers, and perhaps a milling machine. As an example of practice, Mill 59 has the three shops all in one building 30 × 120 feet in size and this contains lathes, planers, drills, presses, etc. Mill 66 has a foundry as part of its plant. This mill, however, is owned by a company which possesses others in the vicinity and hence the foundry can not be said to belong exclusively to this mill.

The assay office is usually a separate building or it is in the building with the superintendent's office and the civil engineer's office. It should never be located in the mill on account of the jar being bad for the balances. It may serve both mine and mill or mill and smelter, or all three, depending on their relative location. Unfortunately an assay office is not considered essential by some mill men and no provision is made for it. This the author believes to be a mistake since the assay office used in connection with systematic sampling and testing will in the majority of cases make a saving far beyond the cost of its maintenance. In addition to the preceding buildings, a storehouse is also frequently included in the plant. Mill 59 has an office of stone, which contains the general and private offices for the mill and mine, and, in addition, map, drafting, assay, retort and melting rooms with part of the basement used as a storeroom for issuing supplies.

§ 795. CONSTRUCTION OF MILL BUILDINGS.—The most important thing is solidity. The special points to be considered are: (1) Strong foundations to stand the weights of the ore bins and heavy machinery and vibration from the latter. (2) Framing of sound materials and well put together for the same reasons. (3) Floors double, made tight and with a slight slope in one direction toward a catch launder and sump to prevent accumulation of pools of water and also to allow ease of cleaning and catching anything of value which may have been spilled thereon. (4) Walls and roofs tight to keep out cold and wet. (5) All possible precautions against fire. (6) Good light and ventilation. (7) Plenty of room, ease of access to all parts and ease of making repairs.

In Europe, especially in Germany, the mills are frequently made of brick and stone or the very modern ones of iron. This is due first to the cost of timber, and second to the fact that mining and milling are on a more permanent basis there than in the United States. The almost universal construction in the mills visited by the author is of wood. The woods used in this country are spruce and the various pines for soft woods, and oak or chestnut for hard woods. The kind used depends chiefly on availability, provided it is sufficiently durable.

The sides of mill buildings are in many cases boarded vertically and the cracks battened. There is one objection to this method, namely, that the battens are liable to shrink and leave large cracks as they dry. A better method is to double board the sides, the boards breaking joint in every case. Clapboarding is sometimes used especially at Lake Superior. The roofs are almost always shingled, sometimes double boarded without shingling.

Instead of boards, corrugated iron is used to some extent to cover the sides and roof. It is stronger and more durable than wood, and is fire proof, thereby saving high premiums for insurance. Its disadvantage is that it makes the building hard to heat in winter, owing to its high conductivity. Mill 59 has No. 26 galvanized iron fastened to a wooden frame all built on a rock foundation so that no timber rests within 4 feet of the ground. The floors are of asphalt laid on a concrete foundation. An addition to Mill 46 has a frame of structural steel lined with boards inside and covered on the outside with corrugated iron; Mill 92 has a steel frame covered with corrugated iron. Mill 25 (see Fig. 513*b*), has a corrugated iron roof on iron trusses and columns. The author is also

informed that at the new large lead mill of the St. Louis Smelting and Refining Company, at Flat River, Missouri, started in 1899, the framing is entirely of iron and the roof and sides are of corrugated iron. The use of steel instead of wood seems to be on the increase.

Some mills are painted outside, while others are not. In the former case red mineral paint is the kind most used, which not only helps to preserve the wood, but also aids somewhat in fireproofing. For the inside of the mill whitewash or white paint is often used which makes it lighter.

Sloping floors are used in some mills, either to suit the slope of launders, as in almost all of the Lake Superior native copper mills, or to drain away water. Instances are given in Table 381.

TABLE 381.—SLOPE OF FLOORS.

Mill.	Slope.	Remarks.
Floors sloping to suit launders.		
Allouez	1 in 8	A native copper mill.
40	1 in 10	See Fig. 519a.
Floors sloping for drainage.		
37	1 in 60	Under jigs. See Fig. 516b.
37	1 in 100	Under slime tables. See Fig. 516b.
84	1 in 40	Under vanners. See Fig. 522a.

§ 796. POWER.—At this place will be considered only the general facts about the power used in the mills. For the details the reader is referred to the outline of each mill given in Chapter XX. Out of 70 mills, 27 use water power alone, 36 use steam power alone, two* (27 and 28) use electric power generated from water, and four (29, 53, 69 and 77) use water power supplemented by steam power whenever water is not sufficient, especially in winter. At Mill 77, even when there is practically no water for power and the mill is run by steam, the overshot water wheel is still run to keep it from drying on one side and getting out of balance. It also acts as a fly wheel. This use of steam to supplement water power is practiced abroad at Przibram and Clausthal.

The use of water power is applied whenever possible, owing to its cheapness. There are three kinds of wheels: (1) The so-called impulse, or Hurdy Gurdy wheels, including the Knight, the Pelton and the Dodd; (2) turbine wheels which act by pressure, of which the Leffel is the most common in the mills; (3) overshot wheels, which act by gravity. There is also in Mill 81 a horizontal water wheel, which in a way is an impulse wheel, although run with much less head than most wheels of this class. A summary of the impulse wheels in the mills shows that a Pelton wheel is used in 18 mills (30, 34, 35, 53, 56, 57, 58, 59, 60, 61, 63, 65, 69, 71, 73, 74, 75 and 76); a Dodd wheel in two mills (61 and 64); a Knight wheel in Mill 72, and the kind is not stated in Mill 62. Of the turbine wheels, Leffel turbines are used in six mills (21, 30, 70, 85, 87 and 88); and Victor turbines in Mill 38. Overshot water wheels are used in two mills (77 and 78).

The kind of wheel to be used will depend chiefly on the head of water. The head for impulse wheels varies from 60 feet in Mill 71, to 900 feet in Mill 34. The head for the turbine wheels varies from 18 feet in Mill 21 to 58 feet in Mill 30. Regarding the comparative efficiencies of impulse and turbine wheels there does not appear to be any great difference, both giving 75 or 80% efficiency under the best conditions. The reason that turbines are not commonly used with high heads is that as the head increases (the power of the wheel

* Since the above was written, Mill 59 has been changed to use electricity and the water power is kept in reserve.

remaining constant) the size of the wheel decreases until it becomes almost toy size and its passages are so small as to be liable to clog. The speed of the wheel also increases at the same time until the number of revolutions exceeds the practical mechanical limit for good running; while on the other hand the simplicity of construction, mounting and running of a Pelton or Dodd wheel remains the same for all heads, the high heads requiring smaller wheels of stronger build. Just where this upper limit of the use of turbines will come will depend on the horse power. Mill practice, as previously shown, seems to put it at about 60 feet for powers below 100 horse power. At Niagara Falls, however, where the horse power is high (5,000 per wheel) and the wheels consequently large, they work under a head of 140 feet.

Another disadvantage of turbine wheels is that when run below their full power their efficiency is considerably lessened. This disadvantage also occurs in some of the impulse wheels owing to the fact that the nozzle should have a gradual reduction toward the outlet for the greatest efficiency. Thus a Knight wheel has a sliding tongue which cuts off part of a slot shaped nozzle. Some Pelton wheels have an arrangement for deflecting the nozzle so that part of the stream strikes outside of the buckets and consequently does no useful work. In case the change is permanent the efficiency may be restored by putting on a smaller nozzle. Some wheels have two or more nozzles acting at the same time and may be regulated by shutting off one nozzle.

At Mill 61 an ingenious device is used for quickly varying the power without any loss of efficiency. Nozzles of different sizes with the proper curves inside are arranged so that any one of them can be rotated in front of the water pipe in the same way that a revolving disk diaphragm is used on a microscope or camera. In Mill 75 the nozzles are made of rubber, which permits the size to be varied by an outside clamp.

Just as the turbine wheels have an upper limit of efficiency, so the impulse wheels have a lower limit owing to the fact that with low heads the velocity of the jet is low and the efficiency falls off. This limit does not seem to be exactly fixed. Mill practice as shown puts it at about 60 feet head, while manufacturers' catalogues go down to 20 feet head.

Overshot wheels, even when of large size, have an efficiency somewhat less than impulse or turbine, generally not much above 60%. They are also expensive to build and maintain, and occupy a large space, and on all these accounts are going out of use. The chief point in their favor is that their efficiency does not decrease to any great extent when the amount of water is decreased. Undershot, breast and current wheels have low efficiency, and were not found in the mills.

Occasionally it is possible to make use of the fall of pulp in a mill. Thus, in Mill 78, the tailings with their water drive the overshot wheel which runs the vanner. In the Martins buddle, which has found some application in Cornwall[320] in the past, the feed pulp drove the revolving parts by means of an overshot water wheel. As a rule, this scheme is not available, since it requires a considerable fall of the pulp, which is seldom practicable. Mill 27 takes the tailings water 1½ miles away from the mill and under 525-feet head and uses it to drive Pelton wheels which run the generators for furnishing the electric power to the mill.

§ 797. Steam is the most common source of power in the mills. The boilers are almost always of the fire tube type, the only exception noted (although there may be others) being Mill 18, which has Babcock and Wilcox water tube boilers. The length varies from 10 to 20 feet, but the most of them are 16 eet. The diameter varies from 44 to 90 inches, average about 60 inches. The ressure used varies from 60 to 125 pounds per square inch, average about 90.

It is a practice in some of the mills to have an excess of boiler capacity. This gives a good efficiency and allows one boiler to be shut down for repairs without shutting down the mill. Where the water tends to form scale badly, two large flues are sometimes used instead of a number of small tubes. This facilitates cleaning, but the efficiency is not quite so high. The boiler plant is in most cases considerably in excess of the engine plant, since in addition to steam for running the mill machinery the boilers may have to supply steam for heating, for drying, for pumping the water, running the machine shop, and, in cases where the mill is at the mine, for hoisting, running the compressor, etc.

The form of engine used is mostly of the simple, single expansion, non-condensing type. These were found in 31 mills (3, 10, 12, 13, 14, 15, 16, 17, 18, 20, 24, 25, 26, 31, 37, 43, 45, 46, 47, 48, 53, 55, 66, 68, 69, 77, 82, 86, 90, 91 and 94). These include engines with common slide valves, piston valves, poppet valves and Corliss valves; and engines with throttle governors and automatic cut offs. Compound engines are used in seven mills (39, 40, 67, 83, 84, 91 and 92). These include tandem compound and cross compound, engines with receivers and without, and engines with condensers and without. Triple expansion engines were found in the two largest mills (44 and 91).

Where power is to be conveyed to a considerable distance, steam is at a disadvantage on account of loss from condensation. If the steam pipe passes through a space which is to be heated there is no harm in leaving the pipes uncovered, in which case about five times as much water of condensation will be obtained as would if the pipe were well covered. A good steam separator is necessary to prevent the condensed water from reaching the engine. This method of heating is, however, not so economical as the use of exhaust steam. Steam pipes should not be allowed to touch wood. For this reason the hole in a partition should be larger than the pipe, and where a pipe passes near woodwork, sheet metal shields should be hung between the pipe and the wood. At Mill 83 the steam pipes are covered with asbestos. Where dry steam is needed for engines at some distance from the boilers, a steam separator is necessary.

§ 798. Gas, gasoline and oil engines were not found in any of the mills visited by the author. The location of mills would prohibit the use of gas as a rule, but there seems to be a field for gasoline and oil engines in localities where coal and wood are dear and there is an insufficient supply of water to generate steam. The usual precautions to guard against fire should be taken. A plant[389] of four gasoline engines has recently been installed at the Fuller mines near Cañon, Yavapai County, Arizona. A 10-horse power engine drives the Gates breaker at the mine opening, a 38-horse power engine runs a 10-stamp battery and the electric lights. A 6-horse power high speed engine, especially designed for steady and uniform speed, runs the concentrators. A 10-horse power engine pumps water up 150 feet and through 3,100 feet of pipe line to the mill. The four engines consume about 100 gallons of gasoline per 24 hours, making the total cost for power for 24 hours about $17.

§ 799. Electricity is used as a motive power in two mills (27 and 28). This is a comparatively recent method of transmitting power, the first application of electricity to mining having been made at Aspen, Colorado, in 1888, and hence its use as yet is not very extensive. Wherever electricity has been applied it has been very successful. The advantages of its use are that electric motors require less attention and repairs than steam engines, and at the same time they are much more efficient in transforming electricity into work than steam engines are in transforming calorific power of steam into work. The loss in transmission is less with electricity than with steam. Mill 27 will serve as an example of the saving that can be made. This mill is in a remote and somewhat inaccessible place, and coal costs $10 per ton. By the use of a water power 1½ miles

distant and electric transmission as described with the scheme of this mill in § 684, they have made a great saving amounting to the cost of the power plant every year or two, and permitting the profitable working of the property at times when it would not otherwise have paid expenses. At Silverton, Colorado, a multiphase plant transmits power three miles up the mountain to the Silver Lake mines to run the mill, hoist, air compressor, pumps, blowers, machine shop and lights. There is probably a saving of $36,000 per year over steam power. Coal previously cost $8.75 per ton at the mine. At the mill a boiler is kept warm all the time and a steam engine is held in reserve to be used in case of accident.

An instance is given of the location of an electric power plant at a coal mine near Madrid, New Mexico, and the transmission of the power under a pressure of 20,000 volts to the Cochiti and Navaho mines and mills at a distance of about 30 miles.

The economical advantage that electricity has in machine shops, namely, that individual machines running intermittently can each have a separate motor and thereby save power over the use of one large central motor, does not exist in concentration plants where the machines run continuously.

§ 800. In regard to the question whether it is better to use one central motor or engine or to use individual motors in various parts of the plant, the mills show that both practices exist. Out of 39 mills using steam power, 33 have one engine for the concentrating plant, while 6 have two or more engines in different parts of the plant. Of 28 mills using water power, 15 have but one wheel each, while 13 have two or more. The advantage of having but one engine is that of economy. The effect of the installation of the large triple expansion engine at Mill 44 to furnish power for the whole concentration plant, instead of using several small engines, was to cut the coal bill down to one-tenth its former size. The policy of this company now is to have the large engine for regular running and to have large single cylinder engines with early cut off, located in various parts of the plant, to be used as spares in case of emergency.

Provided the variations in load are not too great, it matters not how many machines are operated from the same motor as long as the motor is not overloaded and as long as it has a good speed governor. Certain machines, more especially the vanners, require to be run at a constant speed. It is probably for this reason that the majority of the gold stamp mills using water power have a separate water wheel for the vanners. At Mill 71, which has a separate motor for the vanners, the number of rotations per minute of the shaft driving the vanners is shown on a dial, and the vanner man lets on or cuts down the water whenever the number of rotations goes below or above the normal. Mill 73 experienced trouble with the vanners run from a water wheel receiving water from a pipe with pressure varying from the irregular demands of other wheels supplied by it. As the rock breakers are the most irregular users of power, they are in many mills driven by a separate motor at the mill, or they are located at the mine. This subject of the location of the rock breakers will be discussed later in § 821. Mill 87 ensures the smooth running of the jigs, trommels, vanners, etc., by driving them from a special turbine wheel supplied with a governor, while all the crushing machinery in the mill is driven by another wheel. In Mills 24, 57, 65, 73, 74 and 91, the use of several motors is well illustrated, as may be seen by reference to Chapter XX.

§ 801. It will be of interest to have a rough rule by which to calculate the horse power required per ton of ore treated per 24 hours. Of course, this will vary in different mills with the kind of ore and the method of treating it, and it will even vary in the same mill owing to slight changes of velocity or of the speed of feeding and discharge, or of the size of material fed to the breakers.

For these reasons average figures can have only a general value. The following are the figures obtained, the figures in every case being the horse power required per ton treated per 24 hours by the mill: One stamp mill (56) on cement gravel uses 0.15 horse power. Nine stamp mills on quartz rock range from 0.39 to 1.45 horse power, average 0.86. Three combination silver mills range from 1.82 to 3.33 horse power, average 2.42. Nine mills containing trommels, jigs, classifiers, vanners, etc., of which eight treat ores containing galena, while one treats very soft pyrite ore, range from 0.12 to 0.50 horse power, average 0.33. Seven mills similar to the last, but on harder ores, range from 0.50 to 1.00 horse power, average 0.78. Four Lake Superior mills treating native copper rock range from 0.32 to 0.77 horse power, average 0.59; this does not include the power used in the rock houses which would raise the figures slightly. Edison, at Mill 91, by special devices gets the power down to 0.21 horse power on hard ore. In making the preceding calculations three points were brought out: First, as a rule about 80 or 90% of the power used in a mill is used in crushing, and only 10 or 20% for concentrating. This is an argument for avoiding crushing whenever possible. Second, the combination mills using amalgamating pans require the most power, probably owing to the fine grinding that is done. Third, mills treating galena ore require less power than similar mills treating other ores.

§ 802. BELTING is commonly used for the transmission of power short distances. For long distances belts are liable to have an unsteady flapping motion which is bad for both the belt and the machinery. There are three chief kinds: leather, rubber and canvas, the second being the most common in concentrating mills.

Of leather belts, the best kind is considered to be the oak tanned. The common rule for proportioning them is that a single belt 1 inch wide running at 1,000 feet per minute, transmits 1 horse power; a double belt needs to run at only 700 feet per minute, or even 500 feet if it has good length, in order to do the same. Taylor,[124] however, says that to get the longest life with the least attention for stretching, a double belt 1 inch wide should run at from 950 to 1,100 feet per minute to transmit 1 horse power. For fastening the ends, lacing or clamps may be used, or they may be scarfed, lapped and cemented together with or without rivets. The last gives the strongest joint, but lacing or clamps are preferable for new belts where they have to be frequently tightened to take up the stretch. Care should be taken never to put belts on too tight, as this will cause high friction with subsequent hot boxes, wear of oil and babbitt, and perhaps broken pulleys. Taylor recommends that for a double leather belt when at rest the tension be not more than 71 pounds per inch of width, in order that the belt may have long life. Vertical belts require to be tighter than horizontal, since their weight does not help the driving friction; for this reason they should be avoided as far as possible. To reduce friction in the boxes of a shaft it is best to have belts running in both directions from it. In putting on leather belts, placing the smooth or flesh side next to the pulley gives the greatest adhesion, but this leaves the rough or grain side out, which has less tensile strength than the smooth side; the grain side is also harder and stands the wear better if put inside. To give the greatest arcs of contact, the under side of a horizontal or inclined belt should be the tight or driving side. To get the greatest adhesion between the pulley and the belt the surfaces of each should be as smooth as possible. Lagging an iron pulley with leather increases the adhesion 50%. In caring for leather belts, oil should not be allowed to drip upon them, as it shortens the life of the leather; they should not be put in very hot, cold or damp places. When they become dry from use they should be dressed with blood warm tallow, which is allowed to dry before the fire or in the sun. If very hard and dry, they

should be dressed with neats foot or liver oil mixed with a small quantity of resin, which prevents the oil from injuring the belt. To stop slipping, common bar soap or resin is frequently used. Oil should never be applied to stop slipping, since its action is that of a lubricant and promotes rather than prevents slipping.

Rubber belts are very durable, stand heat, cold or dampness better, and have greater strength and less slip than leather. Grease is bad for rubber belts, as it decomposes the rubber. To preserve them they may be painted with a composition made of equal parts of red lead, black lead, French yellow and litharge mixed with boiled linseed oil and japan enough to make it dry quickly. If a rubber belt slips from dust or other cause, moisten the inner side lightly with a little boiled linseed oil and sprinkle with chalk. A little dry resin will often stop rubber belts from slipping. Vezin holds that with proper usage rubber belts need no dressing, and the compounds generally used to prevent slip almost invariably contain grease, which decomposes the rubber, and at the same time dirt soon mixes with the dressing and forms knobs all over the pulleys.

To keep belts at their proper tightness and obviate frequent tightening, as well as to give ample warning of its necessity, tightening pulleys or idlers *P* should be used, working preferably on the slack side of the belts, as shown in Fig. 528. These should be hinged at *H* so that they may adjust themselves. The pressure exerted by them should be adjusted by weights in the box *W* or by a rope and a counterweight. The weight should correspond to the size of the belt and to the amount of its deflection from a straight line. As the latter increases with the stretch of the belt it becomes necessary to increase the pressure of the tightener. Loose ropes should be provided to lift the tighteners quickly off the belts whenever necessary. The best splice to insure smooth running of high speed belts over tighteners is the scarfed, lapped and cemented leather belt or the endless factory made rubber belt. Where a laced joint must be used the diamond lap splice is best; for moderate speeds, the ordinary butt splice may be used. According to Vezin, the total stretch of a good belt, whether leather or rubber, if properly treated and not subjected to excessive strains, ought not to be more than 1½ or 2%. Taylor says that the total stretch of leather belting exceeds 6% of the original length.

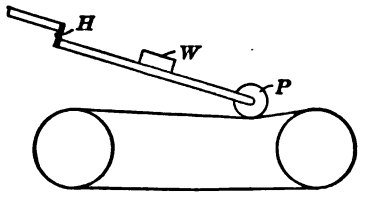

FIG. 528.

The use of open belts without tighteners often involves a slip of from 2.5 to 3%, which must be allowed for in the calculations. With the use of well proportioned belts and tightening pulleys, this figure is reduced to 0.5%, which represents the creep and not slip, and may ordinarily be neglected.

In Mill 91, Edison prefers canvas belts sewed together and soaked in linseed oil. Rubber belts are next best, but as they are not stitched they are liable to split. He favors leather belts the least, as they cost too much and do not wear any better. Belt clamps are used for fastening, and all main belts have tightening pulleys which are lagged. Mill 92 uses a make of canvas belting called the Gandy (see § 628). The common opinion in regard to canvas belting is that it is not so efficient in transmitting power as either leather or rubber.

The belts in Mill 94 are designed, when running, to have 54 pounds tension per inch of width on the tight side of single leather or 4-ply rubber, and 90 pounds for double leather or 6-ply rubber.

§ 803. ROPE TRANSMISSION.—The advantages of ropes either of wire or hemp for the transmission of power are that they can be used to drive at any angle by the use of intermediate sheaves, and they always give warning of a break.

Unwin[50] says that when transmitting full power the efficiency of the system is remarkably high. Probably for moderate distances the efficiency is greater than with any other mode of transmission. But the waste of work is the same for all loads transmitted, so that when working at less than full power the efficiency falls off.

Wire ropes are usually made of six strands with a hemp center. Each strand commonly contains either 7 or 19 wires; sometimes 12 or other numbers are used. The 19-wire strand is preferable for power transmission, since it lasts longer, owing to its greater flexibility, although the small wires do not stand surface wear as well. The life of wire rope is also diminished by having short bends in it. The diameters of the sheaves for 7, 12 and 19-wire strand ropes should be at least 150, 115 and 90 times the diameter of the rope, respectively. For wire rope, the groove in the sheave is circular in section, and the rope rests in the bottom of the groove usually on a filling of rubber, leather or wood, to give higher friction than iron. For hemp rope, however, the groove is made V-shaped, and the rope never touches the bottom, but is wedged between the sides of the groove. The life of wire rope for driving is lengthened by lubrication either with linseed oil or with some one of the various compositions that are on the market. Care should be taken not to load the rope excessively since it will then continue to stretch after the first stretching customary with a new wire rope has passed, and thereby cause frequent stops for retightening.

The limit of economy of rope transmission is about a mile in distance. Where long spans are used, intermediate supporting pulleys are required, fewer for the driving side, however, than for the slack side. A better scheme than this, however, is to use intermediate stations at each of which are two sheaves for continuing the transmission by a new rope. The efficiency decreases however as the number of stations increases as is shown in Table 382, from Stahl.[46]

TABLE 382.—EFFICIENCY OF WIRE ROPE TRANSMISSION.

Number of Intermediate Stations.	Efficiency of System.	Power Wasted. Percent.	Number of Intermediate Stations.	Efficiency of System.	Power Wasted. Percent.
0	0.962	3.8	3	0.908	9.2
1	0.944	5.6	4	0.890	11.0
2	0.925	7.5	5	0.873	12.7

In order that the rope may drive satisfactorily it must have a certain amount of deflection or sag. The proper deflections when the rope is at rest are shown in Table 383. It is found in practice that it does not drive satisfactorily on

TABLE 383.—PROPER DEFLECTIONS OF ROPE AT REST.

Span in feet	50	100	150	200	250	300	350	400	450
Deflection in inches	1¾	7	15¼	27⅝	43¼	62¼	84⅝	110⅝	140

spans less than 54 feet unless tightening sheaves are used on the slack side of the rope. The usual maximum span when the under side of the rope is the driving side is about 370 feet, but by using the upper side as the driving side longer spans may be used—in one instance as much as 1,700 feet.

The use of rope transmission is quite common in the mills. Among the instances are the following: Mills 83 and 84 use manilla rope transmission for their main power lines. Mill 38 transmits about 450 feet from the power house to the mill by wire rope but uses belts in the mills. A proposition to replace this by electric transmission was vetoed as not effecting any saving on such a short distance. Mill 44 has one central power house and uses wire rope transmission to the various parts of the plant. This system replaced the former system of individual engines in each department and thereby reduced considerably the cost of power.

In transmitting power at Mill 94 it is considered to be essential that the section of the groove in which the wire rope runs be a perfect circle; otherwise there will be too much vibration in the rope. This should be at once remedied by turning out the groove with a gouge. In this mill no lubricant is applied to the rope, as it is claimed that the grease decomposes the rubber filling of the sheaves and gradually destroys it.

In the Anna dressing works at Przibram power is transmitted by wire ropes, the condemned hoisting ropes from various shafts being utilized for this purpose.

The field of wire rope transmission has been considerably narrowed by electricity, and several instances are known to the author where electricity has replaced it in coal plants. Its disadvantages are that it is somewhat troublesome to maintain in good running order since the variation of length with the temperature is not adequately provided for by tightening devices.

§ 804. GEARING has the advantage that it affords a positive motion without any chance of slip. Its use is to be avoided, however, as much as possible, since it wears rapidly from dust and causes increased loss of power by friction unless cut gears efficiently lubricated and protected from dirt are used. Mill 91 even goes so far as to run gearing in oil. Cut gears have less loss from friction than cast gears. The special field for gearing seems to be in its use as bevel gears to change the direction of transmission of power through 90°. Thus, at Mill 25, the two engines are geared to the same transverse shaft by miter gears and this transverse shaft drives the four line shafts in the mill through other miter gears. One of the engines also drives a fifth line shaft direct.

§ 805. SPROCKET AND CHAIN DRIVE is used to some extent in the mills, chiefly on elevators and trommels. As a rule, however, it is not favored owing to the trouble resulting from its complication and necessity of frequent repairs. Whenever used, frequent inspection is necessary to avoid breaks as far as possible. Mill 27 reports that half the stoppages were due to the sprocket gears of the trommels. A similar state of affairs existed in a certain coal screening plant.

§ 806. FRICTION CLUTCHES are quite common in the mills, being used to connect various sections of the plant to the main shafting, for example, for the connecting or disconnecting of either a single or a double battery in a stamp mill. They should never be thrown in with a jerk, but be made to take up their load gradually so that the driving machinery attains its full speed with an approximately uniformly accelerated motion.

§ 807. DESIGN OF MACHINES.—In choosing machines there are certain points to be looked after. Perhaps the first and most important one is strength. This is more essential in milling work than in any other line, since milling machinery in many instances goes into remote and inaccessible districts where a break down means much loss of time, delay and expense in replacing the broken part. Strength does not necessarily imply that the machine should be huge and cumbersome, but that it should be so designed that the stock is put in where the stresses occur. Superfluous stock does no good, and it has the disadvantage that it raises the original cost and also the freight charges. McCallum[176] considers that there is room for considerable improvement in this respect. He advocates that the size of the parts be proportioned according to the calculated stresses, such modifications being made as intelligent interpretation of the results of practical experience show to be necessary. The strength and weight should never be so low, however, that the machine lacks rigidity, and is unable to absorb vibrations. It follows that sectional machines are to be avoided unless the conditions are such as to make their use absolutely necessary.

The second important point is simplicity; that is, of two machines of the same type always use the one which has the fewest number of parts, other things

being equal, since the simpler machine is the easier to keep in good running order. A good machine does not have to be well finished all over, since certain parts can always be made rough without any detriment. In some places too much care and finish can not be given; for example, in journals and their alignment. The author cites a case of a manufacturer who makes a certain piece of apparatus in which a great many of the parts are machined so as to be not only smooth running, but also pleasing to the eye. Other manufacturers of the same apparatus make only those parts machined which are necessary for smooth running. The latter apparatus, though it does not shine so much as the former, runs quite as well and costs less. Attention should be paid to the wearing parts of the machine. They should be easily removable, and should be so designed that when they are worn out only a small amount of the material should be left to be thrown away.

High speed is to be avoided as far as possible in milling machinery, since with the scant care usually bestowed in mills, when once the machine begins to get out of order, it is liable to shake itself to pieces.

The use of standard machines with easily replaceable parts is to be recommended on account of the time and money saved by their use. A great variety of machines in a single mill doing the same work is to be avoided, as each requires its own set of supplies, and each kind of machine has its own idiosyncrasies to be learned and cared for by the mill force. If all the machines are alike, saving in both these directions is effected. The author believes that it pays to carry this principle of replaceable parts even so far as to have models, drawings, templates or gauges for the wearing parts giving the proper sizes; for example, to show the exact dimensions of the shoe and stem sockets in stamp bosses, to show the taper of the shoe shank and of the stems, to show the right size of the jaw and cheek plates in breakers in order that a new set may be sure to fit, to show the proper sieve dimensions, height of tailboards, etc., on jigs so that one jig will not have a tailboard 4 inches high while its neighbor treating the same material has one only 3 inches high. There are many other similar examples that might be mentioned.

§ 808. LUBRICATION AND CARE OF JOURNALS.—There are three elements of cost in lubrication: that of the power consumed in friction, that of the oil used, and that of the wear in the boxes. As in all other places where machinery is used, so also in a concentrating plant, lubrication is an important matter. Care in this may make the difference between a dividend and an assessment.

The qualities of a good lubricant as given by Kent[25] are: (1) Sufficient body or viscosity to keep the surfaces free from contact under maximum pressure. (2) The greatest possible fluidity consistent with the foregoing condition. (3) The lowest possible coefficient of friction which in bath lubrication would be for fluid friction approximately. (4) The greatest capacity for storing and carrying away heat. (5) A high temperature of decomposition. (6) Power to resist oxidation or the action of the atmosphere to cause gumming. (7) Freedom from corrosive action on the metals. Conditions (1) and (2) are fulfilled by the following oils in the order named: good mineral oils; sperm; neats-foot; lard oil; the first being the best. Kent also gives the best lubricants for different purposes as follows:

Low temperatures as in rock drills driven by compressed air	Light mineral lubricating oils.
Very great pressures, slow speed	Graphite, soapstone and other solid lubricants.
Heavy pressures, with slow speed	The above, and lard, tallow and other greases.
Heavy pressures and high speed	Sperm oil, castor oil and heavy mineral oils.
Light pressures and high speed	Sperm, refined petroleum, olive, rape, cottonseed.
Ordinary machinery	Lard oil, tallow oil, heavy mineral oils and the heavier vegetable oils.
Steam cylinders	Heavy mineral oils, lard, tallow.

The mineral oils for ordinary machinery should have a specific gravity of 25° to 29° Beaumé and a flash point of 360° F.

To mineral oils to be used for ordinary work it is usual to add about 25% of animal oil which adheres better to the metal while the mineral oil in turn adheres to it. The liability of animal oils to decompose into free fatty acids is the disadvantage of the mixture. Neats foot is probably the least objectionable on this score.

The mill man unfortunately has as a rule no means of making the usual tests on oil and is therefore at the mercy of the seller. It is possible however to make a rough test of the lubricating value of different oils by noting the relative times it takes a given bearing to get hot after having been well oiled and run with each sample.

For use in a great many places about a mill the suggestion has been made to the author that the use of hard lubricants of the type of Albany grease (skimmings from glue manufacture) is very suitable. These have the advantage that being applied under pressure of a spring and from closed cups they work from the center of the journal toward the ends where a grit collar is formed preventing the entrance of dust. They require no attention beyond filling, since they stop feeding automatically when the machinery is not in motion.

§ 809. Wherever possible, lubrication should be continuous whether oil or thick grease is used. This keeps friction as low as possible and at the same time serves as an additional safeguard against grit getting in at the ends of the bearings.

The cutting of bearings and gears is generally due to grit. This must be kept out by all precautions—by having covers which are removed only when there is no chance of dust getting in, and by the use of oil free from dirt. With these precautions the use of cotton waste over an oil hole to filter out dirt is not necessary, except in a few cases where a cover can not be removed without exposure to dust.

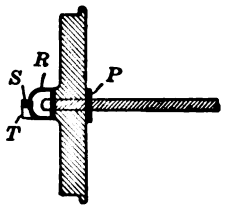

FIG. 529.—EDISON'S OILING DEVICE.

At Mill 91, as a result of considerable study, Edison has installed a pipe system by which between 4,000 and 5,000 bearings are automatically oiled and the excess of oil flows back, is filtered and pumped up to the store tank holding 4,000 gallons, from which it flows on its way to again lubricate the bearings. The best grade of babbitt is used on his bearings. On his conveyor axles he has a device, shown in Fig. 529, in which *R* is a reservoir made dust tight by the stopper *S* held by the spring *T*. The oil thus works through the journal, and at the other end a pin *P* causes the formation of a protecting collar of oil, dust and grit. The reservoir holds 75 grams of oil and is refilled every two months. Even with all his friction saving and lubricating devices, he finds that 65% of the power developed by his engines is used up in friction.

At Mill 5, on the log washers, where the motion is not very rapid, the bearings are kept well protected from grit, and the utmost precaution is used to keep them well greased with a heavy, thick grease. The pressure and the width of the bearings is so great that, if grit gets in, it grinds up very fine and does not wear the bearings very much.

§ 810. HEATING THE MILL.—This is usually done by steam pipes, using the exhaust steam from the engines. Mill 66 has a sheet iron drum 18 inches in diameter running along in front of the amalgamated apron plates and into this the exhaust steam passes. The Lake Superior copper mills use the exhaust from the steam stamps. Mill 38, which is run by water power, has special boilers to generate steam for heating. Mill 42 is heated by coils of 4-inch pipe

receiving the exhaust steam from the steam stamps. The new mill at this place is heated by ordinary radiators and coils of 1½ or 2-inch pipes, using mostly direct steam at reduced pressure from the boilers, although some exhaust steam is also used.

At Mill 40 the ore in the sorting house bins is kept from freezing, even in coldest weather, by carrying the exhaust steam from the hoisting engines through pipes under the inclined bottoms of the bins and having the underspace well housed.

Vezin recommends instead of putting steam pipes into the various places, which it is desired to heat, that a complete heating apparatus consisting of a chamber full of steam pipes, as made by the B. F. Sturtevant Company, of Boston, be used. Air is heated in this and blown in at the top of the room to be heated while the out draft is at the bottom of the room. In this way if the ceiling or roof is tight; the space is heated in the most economical manner and with nearly the same temperature at the floor as at the ceiling. This method is in actual use at the new Dufferin mill, Halifax County, Nova Scotia, where the building has also been made extra tight to keep out the cold as much as possible.

The scheme of heating the hand picking part of Mill 13 has already been described in § 368.

In many European mills large stoves are much used for heating. At the Himmelfahrt mill, at Freiberg, which is comparatively modern, steam, both direct and exhaust, is used.

§ 811. VENTILATION AND DUST PREVENTION.—As far as the presence of impure air is concerned, the ventilation of a mill takes care of itself, but it is the occurrence of hot air and of dust that makes ventilation necessary. Hot air may be let out at the top of the building by swinging shutters on all four sides of the building. These are controlled from below by cords or rods. By having openings on four sides it is always possible to have the outlet on the lee side of the building. Permanent openings in the roof are to be condemned. Dust is bad not only for the workmen, but also for the machinery. In most of the wet concentrating mills water is added to the ore very early in the process, either at one of the crushing machines or during the screening, and the amount of dust that is formed is negligible. It is only in dry mills such as pneumatic, magnetic, sampling and cyanide plants that a large amount of dust is formed. For removing it, the use of permanent openings in the roof or the opening of doors and windows is very inefficient and in cold weather inapplicable. The only proper method is to use an exhaust fan, which should be connected with all elevator, screen and roll casings, so as to produce an inward draught and thus prevent dust from getting out into the mill at the points where the dust is made. In order that the fan may be efficient, the various casings should be made as tight as possible. To do this, Vezin recommends that they be made of common rough lumber, which is planed off for about an inch each side of the joint and strips of cotton cloth about 1½ inches wide are glued on, as shown in Fig. 530. The glue should be thin and the cloth must be damp (wrung out). While still soft the cloth is pressed into the crack, as shown in Fig. 531, with a spatula or dull case knife. This allows for shrinkage of the wood. The cloth is finally brushed over with glue. The joint thus made is superior to the best matched boarding. The fan should have a free discharge passage into the air, or if the dust is valuable a dust chamber with baffle plates will catch the most of it. Passing the dust through a rain of water or atomized water will also settle it. The use of baffle plates without a reduction in velocity is of very little value.

FIG. 530. FIG. 531.

VEZIN'S DUST-PROOFING DEVICE.

Hoppers in the passages serve to catch particles which might otherwise settle and gradually reduce the area.

Mill 91 treats the ore dry, and in most of the machinery no casing is used. As a consequence, the dust is very thick, even though there are ventilating fans in the sides of the building. The workmen wear sponge respirators, which are soaked with water in summer and glycerine in winter.

§ 812. LIGHTING.—Sufficient side windows should be provided so that the quality of the work of the machines may be readily seen. Heavy glass skylights in the roof are even more efficient than side windows. Whitewashing the inside of the mill will help the lighting immensely. For night work, electricity is best, as it is the most convenient, avoids danger of fire and is cheap and clean. Incandescent electric lights should be surrounded by heavy wire netting where there is any danger of being struck. The electric arc light enables the natural colors of the minerals to be best recognized, and is preferable for hand picking. Electricity is almost universally used to-day, except in a few of the older or of the smaller mills. A dynamo placed in the engine room is usually sufficient for the lighting of all the buildings of a small mining and milling plant, and the

TABLE 384.—LABOR REQUIRED IN THE MILLS.

Mill No.	Men Required per 24 Hours. (*a*)	Capacity per 24 Hours. Tons.	One Man Treats per 24 Hours. Tons.	Wages per Man per Shift.	Total Cost per 24 Hours for Labor.	Cost per Ton for Labor.	Cost of Board per Month.
2	(*b*) 2	(*b*) 8	(*b*) 4				
8	(*b*) 9 *s*	(*b*) 50	(*b*) 5.6	$1.75			
10	(*b*) 6 *s*	(*b*) 100 to 120	(*b*) 16.7 to 20	1.50 to 2.50	$14.75	$0.12 to 0.15	
12	(*b*) 17 *s*	(*b*) 120 to 135	(*b*) 7.1 to 7.9	0.40 to 2.00	19.45	0.14 to 0.16	$15.00
13	(*b*) 21 *s*	(*b*) 150	(*b*) 7.1	0.50 to 2.00	20.80	0.14	13.00
15	(*b*) 4 *s*	(*b*) 33	(*b*) 8.3	1.75 to 2.50	8.25	0.25	16.00
18	10 *s*	95	9.5	3.00 to 5.00			30.00
20	13 *s*	175	13.5	2.25 to 5.00	35.50	0.20	30.00
21	7 *s*	40 to 50	5.7 to 7.1	2.25 to 3.00			22.00
22	16 *s*	175	10.9	1.25 to 2.00	24.35	0.14	15.00
24	25 *s*	100	4.3	0.70 to 1.50	43.00	0.43	12.00
25	61 *s*	900	14.8	0.75 to 2.50			13.50
26	28 *s*	200	7.1	2.00 to 3.50	76.50	0.38	20.00 to 25.00
27	23 *s*	120	5.2	2.50 to 4.00			30.00
28	(*b*) 15 *s*	(*b*) 100	(*b*) 6.7	2.75	41.25	0.41	30.00
29	25 *s*	350	14	2.50 to 3.00			25.00
30	24 *s*	530	22.1	2.50 to 3.50	72.25	0.14	25.00
3	15 *s*	200	13.3	3.00 to 5.00	55.50	0.28	30.00
32	13 *w*	500	38.5	3.00 to 5.00	46.50	0.09	30.00
34	14 *w*	300	21.4				30.00
35	14 *w*	250 to 300	17.9 to 21	3.50 to 5.00	50.50	0.17 to 0.20	30.00
40	23 *s*	275 to 300	12 to 13	3.00 to 4.50	82.00	0.27 to 0.30	30.00
43	16 *s*	150	9.4	3.00 to 3.50	57.50	0.38	30.00
53	10 *w*	90	9	3.00 to 4.50	35.00	0.39	30.00
55	23 *s*	130	5.6	3.50 to 4.50	90.50	0.70	30.00
57	5 *w*	64	12.8	2.25 to 5.00	18.00	0.28	
58	4 *w*	80	20	2.50 to 3.00			22.00
59	7 *w*	60	8.6	1.50 to 3.50			
61	6 *w*	115 to 128	19.2 to 21.3	2.00 to 3.50			22.00
62	5 *w*	100 to 150	20 to 30	2.50 to 3.00			20.00
64	4½ *w*	93	20.7	2.50 to 4.00			
66	19½ *s*	400	20.8	2.50 to 8.00	64.33	0.16	
67	7 *s*	50 to 65	7.1 to 9.3	1.20 to 2.50	11.60	0.18 to 0.23	15.00–17.00
68	15 *s*	105	7	3.00 to 4.50			30.00
69	8½ *w*	100 to 115	12 to 13.8	3.00 to 3.50	27.50	0.24 to 0.28	
72	5 *w*	120	24	2.50 to 3.00			24.00
73	8 *w*	300	37.5				
74	8 *w*	300	37.5				
75	4 *w*	152	38	2.00 to 3.00	11.00	0.07	22.00
77	11 or 12 *w*	85	7.1 to 7.7	2.75 to 6.00	36.25	0.43	22.00
78	3 *w*	100	33.3				
79	2 *w*	120	60	2.50 to 3.00			24.00
80	7	400	57.1	1.50			
81	3 or 4 *w*	12 to 16	4				
82	39 *s*	110	2.8	3.00 to 4.50			30.00
83	32 *s*	120	3.8	2.00 to 4.00	85.50	0.71	22.50
84	31 *s*	100	3.2	2.00 to 3.50	83.25	0.83	25.00
86	10 *s*	75	7.5	2.50 to 4.00	30.50	0.41	22.00
90	4 *s*			1.10 to 1.25			17.00
91	112 *s*	4,000	35.7				

(*a*) *s*—steam power, *w*—water power. (*b*) Only work one shift of about 10 hours.

attention necessary is confined to the starting, stopping and occasional oiling and inspection. Some plants have installed a spare machine to use in case of accident or emergency. If oil lamps are used around amalgamated plates, great care should be taken to avoid oil on the latter.

§ 813. LABOR IN THE MILLS.—The tendency of modern ore dressing mills is to reduce the quantity of labor required, and at the same time to raise the quality of it. The work requiring intelligence is carefully kept separate from the purely mechanical on the theory that a man cannot give satisfactory results if he is working both his brain and his body at the same time.

For an enumeration of the men required in the individual mills, the reader is referred to Chapter XX., but a summary of the labor required in different mills is shown in Table 384. For purpose of comparison, computations have been made of the tons treated per man, and also the cost per ton. The table shows that the amount treated per man varies greatly even in mills of the same class. This variation is due to several causes, such as: (1) the size of the mill, since a large mill can always be run with less labor per ton than a small one; (2) the difficulty of the problem, since an easily treated ore gives the mill high capacity and requires only simple treatment; (3) the length of shift, as more men will be required working eight-hour shifts than working twelve; (4) the use of water power instead of steam; (5) whether or not the mill is favorably located and designed to minimize labor; (6) the cost and quality of the labor, for when labor is cheap and of an inferior quality, more will be required. The wages paid are also variable, being governed chiefly by the cost of living. The cost per ton for labor is dependent upon the number of tons treated per man and upon the wages paid.

The "Men Required per 24 Hours," in Table 384, is the total number of men employed, but where the mill is run 24 hours per day, as is usually the case, the men are divided up into two or three shifts, so that the number of men actually working at any one time is only from $\frac{1}{3}$ to $\frac{1}{2}$ of the total employed. The length of shift, that is, whether eight or twelve hours, will depend on the situation. A hard position like that of fireman is more often worked in eight-hour shifts, while an easier position like that of table or vanner man is extended to twelve.

Analyzing the figures of tons treated per man in Table 384, we find that in the hand jig plants (Mills 2 and 3) the tons treated per man are 4 and 5.6 respectively. Gold stamp mills range from 5.6 tons in Mill 55 to 37.5 tons in Mills 73 and 74, these last two being mills of good size, well designed and run with a high capacity per stamp. Canvas plants treat from 33.3 tons (Mill 78) to 57.1 tons (Mill 80) per man. These mills require very little labor, however, since such a large percentage of the stuff treated is waste. The three combination silver mills (82, 83 and 84) range from 2.8 to 3.8 tons per man. This type of mill is the most expensive of any in the table in regard to labor, since it includes the three processes of plate amalgamation, concentration and pan amalgamation. Of the large number of jigging mills, the range is from

⅛ foreman,
1 millwright,
⅛ pipe fitter,
2 enginemen,
2 firemen,
⅛ night foremen,
1 head amalgamator,
4 amalgamators,
2 crushermen,
2 oilers,
2 feeders,
2 laborers.

4.3 tons in Mill 24 to 38.5 tons in Mill 32, but the latter mill has a very high capacity for its size, and most of these mills treat less than 15 tons per man per 24 hours. As an example of the organization of labor in a 100-stamp mill

the list on page 1101 shows the number of men and to whom each is responsible in Mill 66.

The author received no figures from the Lake Superior native copper mills, but thinks the following figures are approximately correct for the labor required to run a mill with five heads of steam stamps for 24 hours: 1 foreman, 2 assistant foremen, 2 engineers, 15 firemen, 6 head runners, 10 feeders, 20 jig boys, 4 table men, 1 blacksmith. In addition to these there will be about 8 additional men required in such mills as regrind the middlings. Such mills as barrel the copper will require also perhaps 2 coopers. This makes a total of 61 or 71 men, and assuming 300 tons treated per stamp per 24 hours, the tons treated per man will be from 21.1 to 24.6.

§ 814. For comparison with the American jigging mills, the following figures of a few German mills are given, all of which are using graded treatment upon ores containing lead and zinc. The Himmelfahrt Mill, at Freiberg, using steam power, washes 150 or even 200 tons per 10 hours, using a force of 55 men. This is at the rate of from 2.7 to 3.6 tons per man. The Silberau works at Ems, using both steam and water power, treats 200 tons in 10 hours with a force of 111 men, including overseers and machinists, but exclusive of roustabouts. This is 1.8 tons per man. The new Gute Hoffnung mill, at St. Goar on the Rhine, treats 50 to 60 tons in 10 hours with 45 men, or at the rate of 1.1 to 1.3 tons per man. At the old mill they required 90 men, and even by running day and night they could hardly treat half as much, and the quality was no better than at the new mill. The Clausthal works treat 270 to 275 tons per 10 hours, employing 450 men and using both steam and water power. This is 0.6 ton per man per 10 hours. At Ramsbeck 1.5 tons per man are treated. It will be seen that these five foreign mills each use more labor than the American. There are several reasons for this: (1) the foreign mills are somewhat more complex; (2) many of them are not so conveniently designed for automatic handling; (3) labor is cheaper, and consequently more work is done by hand. The low figure shown at Clausthal is especially due to the inconvenient arrangement of the plant whereby an excessive amount of tramming is required.

Regarding the "Cost per Ton for Labor" in Table 384, it will be found that as a rule it varies inversely as the tons treated per man.

It may be said that in general the capacity of the mill and the quality of the product depend largely upon the intelligence and reliability of the men employed in the various departments. A saving made in wages may be more than offset by losses in efficiency of machines due to ignorance or neglect. The losses by theft are not common in mills other than gold and silver. To avoid clannishness, which often leads to needless labor troubles, it is well to employ men of several nationalities. In hand picking, boys under supervision may be substituted for men as having keener vision and quicker motion.

One means of increasing the efficiency of the working force is for the most part neglected by mill authorities. Almost the only instance observed of any sanitary precautions or hygienic care of the men was at Mill 22, where a change house is provided for both mine and mill hands. This is furnished with individual lockers, steam coil for drying wet clothes, hand baths and a swimming tank. Mill 38 and the new plant at Mill 42 have the same as Mill 22, except the swimming tank.

§ 815. WATER.—Water is required in the mill for three things: First, for the concentration; second, for the power, either as water power or to supply the boilers; third, for protection against fire. The amount used, the source and the method of bringing to the mill are given in Chapter XX. under each mill. The subject is here considered only from a general point of view.

The amount of water used in the mills is given in Table 385. For purpose of comparison, the mills are arranged in different groups and the figures have

TABLE 385.—WATER USED IN THE MILLS.

Mill No.	Water Used per 24 Hours.	Capacity of Mill per 24 Hours.	Water Used per Ton of Ore.		Remarks.
	Gallons.	Tons.	Gallons.	Tons.	
Gold Stamp Mills.					
58	51,840 (a)	90	576.0	2.40	30 stamps.
56	96,336 (a)	60	1,605.6	6.69	10 stamps.
57	156,198 (a)	64	2,440.5	10.18	40 stamps.
59	240,750 (a)	60	4,012.5	16.73	40 stamps.
61	289,040 (a)	115 to 128	1,867.5 to 2,078.6	7.79 to 8.66	40 stamps.
62	269,600 (a)	100 to 150	1,730.6 to 2,596	7.21 to 10.82	50 stamps.
64	151,000 (a)	98	1,623.7	6.77	30 stamps.
65	123,840 (a)	200	619.2	2.58	40 stamps.
67	216,000	50 to 65	3,324.6 to 4,320	13.86 to 18.01	20 stamps.
68	213,120	105	2,029.7	8.46	60 stamps.
73	185,760 (a)	300	619.2	2.58	60 stamps.
74	185,760 (a)	300	619.2	2.58	60 stamps.
75	179,676 (a)	150	1,197.8	4.99	40 stamps.
Combination Silver Mills.					
82	252,576	110	2,296.1	9.57	50 stamps.
83	Steam power...15,360 (b) Concentrating..39,480 (b) Total .....54,840 (b)	120	457	1.91	60 stamps.
84	Fresh.....70,000 Repumped.....30,000 Total.....100,000	100	700 300 1,000	2.92 1.25 4.17	40 stamps.
Jigging Mill.					
12	62,000 (c)	120 to 135 (c)	459.3 to 516.7	1.92 to 2.15	.....
Mills with Jigs, Vanners and Tables.					
20	Fresh.....93,600 Repumped ....144,000 Total.....237,600	175	534.8 822.8 1,357.6	2.23 3.43 5.66	.....
22	1,152,000	175	6,582.8	27.45	.....
25	2,250,000	900	2,500	10.42	.....
26	Fresh..... 43,200 Repumped..... 86,400 Total.....129,600	200	216 432 648	0.90 1.80 2.70	.....
28	900,000 (a) (c)	100 (c)	9,000	37.53	.....
Montana Copper Sulphide Mills.					
39	Flows in.....1,000,000 Pumped.....1,440,000 Repumped..... 700,000 Total.....3,140,000	500	2,000 2,880 1,400 6,280	8.33 12 01 5.84 26.18	.....
40	Fresh..... 864.000 Repumped..... 200,000 Total 1,064,000	275 to 300	2,880 to 3,141.8 666.7 to 727.2 3,546.7 to 3,869.0	12.01 to 13.10 2.78 to 3.03 14.79 to 16.13	.....
41	1,200,000 to 1,400,000	300 to 350	4,000	16.68	.....
Lake Superior Native Copper Mills with Steam Stamps.					
44	20,000,000	2,080	9,615.4	40.09	.....
45	3,744,000 (d)	450	8,320	34.69	.....
46	12,000,000	1,260	9,523.8	39.71	.....
47	12,000,000	1,700 to 1,900	6,315.8 to 7,058.8	26.33 to 29.43	.....
48	10,000,000	1,500	6,666.7	27.80	.....

(a) The mill is run by water power, and this figure does not include the water used for power. (b) This does not include what is repumped. (c) This is for 10 hours only. (d) This is the water that leaves the mill with the tailings. The amount of water coming to the mill is slightly larger.

all been reduced to the basis of amount of water per ton of ore. It will be seen that the amount varies from 2 or 3 tons of water per ton of ore in some of the stamp mills to 40 tons in some of the complex mills.

In general the water requirements of a mill depend upon several conditions: (1) Upon the kind of the mill. A hand jigging mill requires very little more water than that which is used in washing off fines and that which goes off as moisture with the concentrates and tailings. The simpler gravity stamp mills use much less water than the more complex steam stamp mills. (2) Upon the capacity of the mill and the various conditions which affect it. For example, Mills 59 and 65 have 40 stamps each, but Mill 59 stamps less than one-third as much ore as Mill 65 with proportionally increased water rate. (3) The water used depends upon the amount that is available. Where there is plenty there is no need to economize. To illustrate this note that in Table 385 Mill 84, which suffers from scarcity of water uses, with no injury to the work done, less than half as much per ton as Mill 82, where water is abundant. These two mills are of the same type and have almost exactly the same capacity per stamp. Notice also the small amount used in Mill 26 compared with others of its class. Mill 28 estimates that it could easily cut the quantity of water used down to two-thirds the present quantity if necessary. The author knows of an instance where a superintendent decreased the amount of water fed to a steam-stamp until the quantity was less than one-half, before the mill men complained.

In addition to the data given in Table 385 Mill 68 gives a detailed account as follows:

Engine (130 horse power)	5,760	gallons	per	24 hours.
60 stamps	172,800	"	"	"
24 vanners	34,560	"	"	"
Total	213,120	"	"	"

and Mill 82 as follows:

Engine (200 horse power)	15,840	gallons	per	24 hours.
Live steam for amalgamating pans	6,336	"	"	"
50 stamps	144,000	"	"	"
20 vanners	28,800	"	"	"
12 settlers	57,600	"	"	"
Total	252,576	"	"	"

In Table 385 the figures given include water used for generating steam except as noted in cases where water power is used. It will be seen that no average figures on water required for water power can be given since the amount will vary with the head. It will be very easy however to calculate this amount when the power required and the head are known.

As shown by Mill 83 in Table 385 and by the detailed statements of Mills 68 and 82, the water used for steam power is a small fraction of the total water of the mill.

§ 816. The saving that can be made by settling and repumping is shown by Mills 20, 26, 39, 40 and 84 of Table 385. The extremes are Mills 26 and 40, which show that of the total water used only 33% and 81% respectively have to be supplied fresh. Mill 40 however is not saving nearly all the water that it might by settling and it therefore seems fair to conclude that under favorable conditions, of the total water supply of the mill two-thirds can be obtained from settling and using over the waste water and only one-third has to be supplied fresh. Mills 68 and 82 estimate that they could cut the water down one-half if the waste was settled and repumped.

At Broken Hill, New South Wales,[316] the total water used per 24 hours in a mill having steam stamp and Collom jigs was 1,647,000 gallons, but as the water was settled and used over, the amount actually supplied per 24 hours

was only 30,000 gallons. The mill treated 170 tons per 24 hours, making the water actually supplied to be 176 gallons (0.734 ton) per ton of ore. Only $\frac{30,000}{1,647,000}$ or about $\frac{1}{55}$ of the total water used has to be supplied fresh.

The table shows that mills with steam stamps, classifiers and Collom jigs (44 to 48 inclusive) require more water than those with rolls, trommels and Harz jigs (39, 40 and 41). A quotation[15] on the water required in a wet silver mill is as follows: For boiler, 7½ gallons per horse power per hour; for each stamp, 72 gallons per horse power per hour; for each pan, 120 gallons per horse power per hour; for each settler, 60 gallons per horse power per hour. Usually in the Washoe district, the total water consumption in a wet silver mill is between 1,870 and 2,250 gallons of water per ton of rock treated, or from 2.5 to 3.75 gallons of water per stamp per minute.

§ 817. The water supply of a mill comes either by gravity or by pumping. It comes by gravity either from a pond or stream through ditches, flumes or pipes to 28 mills (21, 24, 25, 26, 27, 28, 29, 30, 31, 32, 34, 35, 42, 53, 56, 57, 58, 60, 61, 62, 64, 66, 67, 69, 75, 76, 77 and 88). In all of these mills except eight (24, 25, 26, 28, 31, 42, 66 and 67), it is also the source of power for the mill. As the water is not in every case delivered at a sufficient height to run to all the machines, pumping is resorted to either for all or part of the water in four of the above mills (27, 30, 31 and 88). Those mills which use water for power usually have an ample supply and do not use the water over again for concentration. In one case however (Mill 34), the waste from the water wheels is delivered at such a height that it is available for the washing. At the Bertha Zinc Works, Virginia, the ore is conveyed down 1,300 feet to the mill by water in a flume 12 inches wide and 6 inches deep.

Where the water is pumped to the mill it comes from various sources; from the mine in 2 mills (20 and 22); from a creek or river in 4 mills (12, 22, 38 and 86); from a near by lake or pond in 6 mills (10, 44, 45, 46, 47 and 48); from an artesian well in 2 mills (16 and 17), and from a distant source in 2 mills (83 and 84).

Where water is scarce the practice of settling it and using it over prevails. This occurs in 9 mills (16, 17, 20, 24, 25, 26, 39, 40 and 86). The settling arrangements have been already discussed in § 349 and § 351. The use of mine water is found in 3 mills (20, 22 and 27). Mill 66 also uses it in winter to supplement the regular supply. The use of mine water is generally avoided if possible, since it is very likely to be muddy or to contain acid which eats whatever metal comes in contact with it. This latter difficulty may be remedied by the use of lime (see § 154).

Some mills have more than one source of water. For example, Mill 67 ordinarily has a sufficient amount run in by gravity, but in case of emergency it can get water by pumping from the pond into which its tailings are delivered. Mill 39 has part of its water flow into the mill, while part is pumped in. This is in addition to what is repumped from the settling tanks. Mill 22 has part of its water from the river and part from the mine.

It is desirable that the water of the mill supply shall not be muddy. For this reason Mill 40 avoids as far as possible the use of water from Silver Bow creek, which has already been used by three other mills, and instead goes to Black Tail creek, a half mile away. For a similar reason, Mill 86, which takes its water from a creek, first settles it in tanks before pumping it to the mill. At Mill 67 the water for the boilers has to be settled. To keep the water as clear as possible from mud and also to keep larger material out of the pipe it is customary to put a box with an open top around the suction end of the pipe.

The power for pumping where the pump is near the mill may be furnished by steam, as in Mill 67, or by compressed air if the plant includes an air compressor. Where the pump is located at a distance a separate steam plant for pumping has to be installed, as at Mill 84, or the pump may be driven by electric power transmitted from the mill, as at Mill 40. The kind of pumps used have been considered under that head (see § 632).

Care should be taken in constructing ditches, flumes and pipe lines that there is sufficient protection from freezing in winter and from damage by storms. An open flume is more liable to freeze than a covered ditch or pipe. Iron pipe should not be used with acid water. Thus Mill 40 takes water from a creek into which mine water is delivered farther up, and consequently the pipe used was made by boring out logs and banding them spirally with 1-inch No. 22 iron and covering with a layer of asphalt and sawdust.

§ 818. Water is usually delivered into tanks located near the top of the mill. The capacity of these tanks will depend upon the conditions, chiefly upon the regularity of the supply, and the liability of its being interrupted. These tanks serve the purpose of store tanks and pressure tanks. In case a constant pressure is desired, as for classifiers, it may be obtained from a small tank, which overflows constantly into a larger tank. Some mills have practically no storage capacity; for example, Mill 38 has the water come into the mill by a pipe about 2 feet in diameter, and the end is simply turned up for a stand pipe. In most of the others the storage capacity is sufficient for only two or three hours; for example, Mill 24 has about 4,000 gallons storage capacity, Mill 25 has about 2,000 gallons and Mill 40 about 60,000 gallons. Two mills in the dry district of Utah have large storage capacity: Mill 83 can store 600,000 gallons and Mill 26 about 60,000 gallons. The former is sufficient to last nine days. As far as concentration purposes go, the height of these tanks above the machines needs to be but little, but for fire purposes it would be wise to give them considerable head. Where it is impracticable to have this head, a fire pump should be put in with pipes leading to fire plugs in different parts of the building with hose constantly attached to them.

The arrangements for heating water in winter for hand picking have been described in § 368, and for amalgamation in § 541.

As to the kind of water used, the author found it to be fresh in every one of the mills visited by him, and, in fact, he can cite no ore concentrating mill which uses anything but fresh water. As shown in § 2, there is an argument for the use of salt water owing to its greater density, provided that the solids dissolved in the water have no injurious effect upon the machines or concentrates in other ways, as is frequently the case in gold amalgamation (see § 541). There may be also cases in which the salt which would be left with concentrates after drying will be injurious in the later treatment. Thus, when concentrates containing gold are roasted in the presence of salt, there will be a tendency for chloride of gold to form, which will be volatilized and lost. An instance of unfavorable results from using sea water is the case of a coal washer at Union Bay, Vancouver Island, which, with fresh water, reduces the ash from 35.5% to 8.5%, the fixed ash being 7.5%. When using sea water (specific gravity, 1.026) the ash in the washed coal was 10%.

§ 819. The moisture retained by drained ore is of importance in estimating the moisture in wet ore. The most complete figures are those given in Table 386 which shows the percentages of water found by Von Reytt[403] to be retained by different sizes of ore from the mines of Przibram, Bohemia, after thorough wetting followed by reasonable draining.

The per cent. of moisture is based on the wet ore, and is obtained by dividing the difference between wet and dry samples by the weight of the wet samples and multiplying this by 100. The table shows how the per cent. of moisture

TABLE 386.—PERCENTAGES OF MOISTURE RETAINED BY DIFFERENT SIZES OF ORE AFTER THOROUGH WETTING FOLLOWED BY REASONABLE DRAINING.

Size.	Material.	Moisture.	Size.	Material.	Moisture.
Mm.		%	Mm.		%
64-32	Ore. (a)	0.35			
32-22	Ore.	0.55	3-2	Ore.	6.19
22-16	Ore.	0.74		Calcite.	6.06
16-12	Ore.	1.33	2-1	Ore.	8.59
	Calcite.	2.49		Calcite.	9.80
12-8	Ore.	2.25	1-0.5	Ore.	17.59
	Calcite.	2.58		Calcite.	18.90
8-6	Ore.	3.01	0.5-0.35	Ore.	18.16
	Calcite.	3.38		Calcite.	20.44
6-4	Ore.	2.91	0.35-0.10	Ore.	16.80
	Calcite.	3.98		Calcite.	20.57
4-3	Ore.	5.66	0.10-0	Ore.	16.94
	Calcite.	5.21		Calcite.	21.69

(a) The principal minerals in this ore were quartz, siderite, calcite, galena and blende.

increases on the finer sizes. In addition to Von Reytt's figures, the author also has a few figures from the mills. At Mill 27 the concentrates (chiefly galena) below 0.9 mm. diameter, contain 23% moisture before drying; while those from Mill 38 (chiefly pyrite and chalcocite) from 9.5 mm. to below 1 mm. in diameter, with the coarser sizes predominating, average only 4 or 5% moisture. The concentrates from Mill 40 from 7 mm. to below 1 mm. in diameter average 4% moisture after 48 hours draining. At the Allouez native copper mill, Lake Superior, the water with concentrates below $\frac{3}{16}$ inch (4.76 mm.) varies from 3% for coarse to 12 or 13% for fine. Tests[283] made on stuff ground through a 60-mesh screen in a dry process mill, saturated with water and then drained in 33⅓-pound lots on a slightly inclined board, showed that a soft talc ore retained 96 gallons of water per ton of dry ore while a harder ore retained 66 gallons per ton. These figures correspond to 29 and 22% moisture, respectively.

In a cyanide plant the ore drained for from 4 to 20 hours in circular vats 4 feet 6 inches deep and 20 feet in diameter through filters consisting of one thickness of cocoa matting and one thickness of cotton cloth contained an average of 13.56% moisture, based on 1,100 tons. The highest was 16.75% and the lowest 10.35%. An average sizing test of the material was:

On 40 mesh.....7.67%	Through 100 on 120 mesh, 2.00%
Through 40 on 60 mesh...13.33%	Through 120 mesh.....66.67%
Through 60 on 80 mesh... 1.25%	
Through 80 on 100 mesh...8.58%	99.50

It is stated that in South Africa[416] the sands from cyanide treatment (probably ranging from 22 mesh to perhaps 100 mesh), after draining, contain 12 to 14% moisture or 33 to 39 gallons of water per ton of dry sand, while in the slimes (finer perhaps than 100 mesh), the moisture contained is 50% or 240 gallons per ton of dry slime.

All the preceding figures agree pretty well with those of Table 386.

In the light of these figures it will be seen that measurements of the water passing off with the mill tailings does not quite give the amount used by the mill since some is retained by the concentrates and some is used for steam.

§ 820. ARRANGEMENTS OF MACHINES IN MILLS.—American concentrating mills differ from many of the German mills in their compact arrangement of all the concentrating machinery under one roof. As shown in Figs. 511 to 524*e*, ore starts at one end and passes along continuously through the crushing, coarse concentrating and fine concentrating. Its general course is either in a straight line (see Fig. 519*b*) or in some cases it turns at right angles (see Fig. 516*a*). The building is not necessarily of a uniform width, but a mill

with a large number of jigs or vanners may have this part wider (see Fig. 522*b*). Trommels and classifiers are commonly placed at a higher level than the jigs so that their products are delivered by gravity to the final washers. The jigs are placed so that the ore in passing through them either flows parallel to the general course of the ore in the mill (see Fig. 520), or transverse to it (see Figs. 512*d* and 516*a*). The line shafting usually runs transverse to the general course of the ore in the mill, although sometimes parallel. The former enables most of the machinery to be driven without using quarter turn belting. The transverse arrangement of the jigs works best with the transverse line shafting. The middlings, when present, are recrushed in machinery located either back with the first crushing machinery (see Fig. 511), or at the end of the machines which produce them (see Fig. 516*a*). The former is more common, while the latter is found more especially in long or large mills. The middlings, wherever recrushed, most frequently go back into the system with the original ore, but in some cases, especially in large mills, they are treated in separate machines located among the others or at one side.

Sectional mills, that is, mills with two or more similar sections arranged side by side, occur in numerous instances, which vary from mills in which each section is entirely separate throughout, to mills in which only the crushing and coarse concentration part is in sections. As examples, we have the gravity stamp gold mills in which each battery with its plates and vanners forms an entirely independent section, except for the rock breaker; the Lake Superior native copper mills, which are made up of sections, each with its steam stamp, classifiers, jigs and tables; also to a less degree in Mills 25, 38 and others. The use of sections appears more particularly in the large mills where a number of machines are required to do the same work, and the sectional arrangement has the advantage that it enables a part of the mill to be shut down when repairs or improvements are necessary or when ore is scarce, while it is just as cheap in constructing and running. As a means of testing and comparing the effect of different machines or adjustments the sectional arrangement is of great value. Mill 44 has one steam stamp and its accompanying machines, which are used for settling questions of design and arrangement.

Among large mills the one farthest removed from the sectional plan is Mill 91, in which all of the ore passes through every machine in the coarse crushing and fine crushing plants; the system changes, however, with the screens, magnets and briquetting machines, which have many like machines in parallel. Two large stock houses are installed, one between the coarse and fine crushing and the other between the magnets and briquetting machines. In this arrangement the stock houses are necessary in order to avoid the shutting down of the whole plant whenever a breakdown occurs in one part. This arrangement has the disadvantages in comparison with the parallel section arrangement that a complete shutdown is unavoidable where the breakdown is of long duration; also that unless there is an equal amount of time lost in each section it will ultimately be necessary to reduce the work of one section for a while in order to let the others catch up. The normal condition of the stock houses would seem to be about half full.

§ 821. The arrangement of the gravity stamp mills varies somewhat. Where the mill is small there is merely one line of stamps, and this was the case with all the mills of this class visited by the author. In large mills, however, this would make the mill too long, and two lines of stamps are used. These two lines may be back to back with the ore bins between them and the pulp flowing away in opposite directions, or the two lines may face one another with the pulp from each flowing toward the other. This latter arrangement exists in the Father de Smet mill, South Dakota. While it affords greater convenience in looking

after the work of the mill, yet preference is not given to it owing to the fact that the ore bins shut out the light, and it has less stability and more vibration.

In this connection the location of the rock breaker is to be considered. In 52 out of 67 mills it is with the mill. In the other 15 mills, among which are the Lake Superior native copper mills, it is separate from the mill, being located in a rock house, generally at the mine. The latter location has several advantages. It removes one of the chief causes of irregular loading of the mill engine and saves the production of considerable dust in the mill, which is bad for the machinery and unhealthy for the men. It avoids considerable vibration at the mill and saves much heavy construction, which would be necessary where the breaker is located at a height in the mill. The smaller size of the ore makes the loading of cars, especially of a rope tramway, easier and gives them greater capacity since the buckets may all be given a full load. It also does away with the necessity of having one set of bins for coarse and another for fine ore. Having the breakers separate from the mill may, however, be unadvisable in many cases, since it has the disadvantage of adding one more department to the plant to be cared for, and consequently increases the expense of installation and running, especially in the case of a small mine.

§ 822. In arranging mills, it is important to have sufficient reserve capacity so that there will be no need of forcing any of the machinery, and so that the work of one machine may be temporarily suspended for adjustment or repairs. The following instances are given of the use of this policy. Mill 44 usually has one or more steam stamps laid off, together with the corresponding concentrating machinery. Rolker[55] reports that at the Allouez mill they were able to produce 4% more copper in the long run by running three steam stamps continuously and keeping one in reserve than they could by running all four with no reserve. A classifier may have one of its spigots plugged temporarily while its jig is being skimmed, and the stuff is treated by the machines handling the other spigots. The overloading for a few minutes does no serious harm. Mill 84 has the launders so arranged that the pulp which commonly goes to one of the upper vanners from each battery can be sent to the two corresponding lower vanners, which usually treat the tailings of the upper vanner. In this way a vanner can be thrown out for repairs. This mill also has one 7-belt Woodbury vanner in reserve. Other stamp mills have arrangements for cutting out one vanner and sending its work to the others. Mill 30 and other mills have rock breakers in reserve. Mill 59 has two rock breakers, either of which can deliver into either of two bins by means of an adjustable chute.

In mill arrangement all useless apparatus should be removed. For example, it frequently happens in making changes in a mill that certain pieces of apparatus are no longer of any value, but rather than take them out, the ore is allowed to run through them, thereby entailing a useless expense to keep them in order.

This rule is not so frequently broken, however, as its converse, namely, that all good apparatus should be used to its full extent. To cite an instance, the author found in one mill a settling tank which was capable of doing most excellent work as a settling device, but when so run it did not act as a good distributor. In order to get good distribution the use of the latter part of the tank was given up and another settling tank was put in to follow it, whereas, by a mere rearrangement of spigots the first tank could have been made to do both good settling and good distributing.

Not only should useless apparatus be discarded, but the economy of the various machines should be carefully considered, and if it is found that any part of the work is costing more than is gained from it, then that part should be immediately discontinued. This sin is of rare occurrence, however, the usual trouble being that there is a lack of machinery, due perhaps to a short sighted policy, and

stuff is thrown away that might in a few months pay for the machines that were necessary to treat it. Examples of this are the gold mills formerly sending away tailings from which canvas plants now make a handsome profit, that of Mill 55 amounting to $2,000 per month. Other examples are in some Australian gold mills, which make no effort to catch the concentrates in the ore, and thus have a great loss.

§ 823. Many special notes on arrangement of individual machines are given in Chapter XX. There are, however, some general points which can best be discussed here.

The question, shall machines be placed in series or parallel to do a given amount of work, is an important one. As a rule, it will be found that it is considered preferable to use the parallel arrangement, that is, for example, having a given amount of ore to be jigged on two jigs, the ore is divided so that each jig treats half rather than running all the ore over the first jig and then the tailings of the first over the second. While it is true that the latter arrangement has the advantage that a grain of concentrates has to run the gauntlet of the second machine, yet the ore has to be rushed at such a speed over the jigs that the chances of losing concentrates in the tailings are probably greater than with the parallel arrangement where the stuff is treated at such a decreased rate that the separation has time to take place. There are, however, special cases where the series arrangement is used. As to whether this is an advantage has not been proved. For example, in Mill 54 the pulp from 30 stamps, amounting to 100 tons in 24 hours, is treated on six vanners arranged in parallel, and the tailings of these go to twelve others arranged in parallel. It is to be presumed that the larger part of the concentrates are taken out on the first set, while the second set serves to catch the last grains, which are difficult to catch. The vanners of the first set each treat 16⅔ tons in 24 hours, and those of the second set 8⅓ tons (minus the small amount of concentrates of the first set), whereas, if the pulp was distributed equally among the eighteen vanners at the start, then each one would have to treat only 5⅝ tons in 24 hours. Similarly Mills 83 and 84 both have two sets of vanners, the second set containing twice as many as the first. In Mill 83, as now arranged, each vanner of the first set receives 10 tons per 24 hours, and each one of the second set treats 7½ tons (minus some concentrates removed by the first set), whereas, if the pulp was evenly distributed among all the vanners at the start, then each one would receive only 5 tons per 24 hours. The corresponding figures for Mill 84 are: First set, now 12½ tons each; second set, now 6¼ tons each; if uniformly distributed, 4⅛ tons each per 24 hours.

An argument for the use of the series arrangement rather than the parallel in crushing machines under certain conditions has already been given in § 99, where graded crushing is considered.

§ 824. The coupling together of two different machines so that one makes clean, rich heads while the other makes clean tailings is an idea that seems to be gaining favor with mill men. It is to be recommended as a very efficient arrangement. The following are examples of its use in the mills. Mill 36 enriches the heads of the slime table by sending them to a vanner. Mills 45 and 46 send slime table heads to a kieve which makes rich heads but the tailings are too rich to be thrown away and have to go back to the slime tables. Mill 47 uses the same system except that it uses tie and kieve instead of kieve alone. The ability of the Wilfley table to make clean heads makes it particularly adapted to this arrangement and the use of slime tables joined with Wilfley tables is found in many mills of recent date (see § 699 and § 707).

§ 825. The stuff to be treated by a mill can be divided into three parts: coarse mine ore, mine fines and middlings; each of which differs from the other two

sufficiently to make separate treatment preferable although not absolutely necessary.

The coarse mine ore is the largest portion and its treatment forms the main system or backbone of the mill. The arrangement of the machines for the treatment of middlings with relation to the machines of the main system has been discussed in § 820.

The separate treatment of mine fines is not practiced in this country although it is very common in European mills, more particularly those mills where the ore contains more than one mineral, say galena and blende. The usual scheme is to screen out the fines, that is stuff below 2 or 3 inches, and treat it by itself while the coarser stuff is crushed, picked and treated separately. (See outline of the Clausthal Mill in § 698.)

The scheme is advantageous in that in the stuff as hoisted from the mine, the fines (below 1½ to 3½ inches according to the ore) usually contain considerably more mineral and less gangue than the coarse or they may contain an entirely different preponderating mineral from the coarse. This is due to the fact that the economic mineral is generally more friable than the gangue. There is logic therefore in not undoing a work that has been partly done, that is, in not mixing together again minerals and gangue that have been partially separated, and separate treatment has the same advantages as the separate treatment of two kinds of ore from different mines has, viz.: that the adaptability and adjustments of the machinery can be exactly suited to each class of ore. The additional saving made by treating mine fines separately pays in the end for the larger plant required. In this country however where mining and milling are carried on with little regard for future generations, our mill men do not care to make the necessary outlay. Mill 12 is an exception to this.

§ 826. The treatment of different varieties of ore separately is to be recommended since each ore requires its own adaptation and adjustment of machinery: neglect of this principle causes poor work. As examples of its observance there are Mills 16 and 17, one of which treats that part of the ore which is mostly galena and the other that which is mostly blende; also Mills 68 and 82, one for the gold bearing ore, and the other for the silver bearing from the same mine; also many German mills which have separate divisions for their galena and their zinc ores.

This principle also applies to mills which have to treat ores which vary considerably in richness, it being wise to treat rich mineral separately from poor. An example of this is in the gold stamp mills in the Thames district, New Zealand, all of which have in addition to their regular stamps a single stamp called the "specimen stamp" in which all rich rock is crushed and treated separately. Also in some of the gold stamp mills of this country one battery is saved for treating special lots of rich ore. There is logic in this scheme since a longer and more careful treatment can be given to a rich ore with profit which could not be applied to a poor ore without loss.

This shows that the richer the ore the more perfect should be the arrangements for treating it. Perfection does not mean in this case necessarily a more elaborate arrangement and a sacrifice of simplicity. On the contrary however an arrangement should always be chosen which is as simple as possible without carrying the idea beyond the limit as was the case in one instance related to the writer, of a mill using stamps and vanners where graded crushing and concentrating should have been used. The excuse given was that a combination of stamps and vanners formed a simple mill which was the chief thing to be desired.

§ 827. GUARDING THE WORK OF MACHINES.—The writer rendered the assertion in 1893 that "every machine, as far as practicable, should have its guard." The best examples of this practice are in those multi-sieve jigs which run the first sieves with a thick bottom bed to keep gangue out of the concentrates, and

the last sieve with a thin bottom bed to ensure clean tailings by allowing a little of the gangue to go into the concentrates. In other cases a machine may have another one placed after it, the first machine being run to make clean heads while the second is run to make clean tailings.

A general case of this guarding occurs on every machine which makes middlings in addition to the heads and tailings. The middlings product not only serves to catch the included grains which are not ready for final treatment but it also serves as the guard which receives stray grains of concentrates which would otherwise go into the tailings and stray grains of gangue which would otherwise go into the heads.

On machines like vanners which make no middling product and where the expense of having a second machine act as guard is greater than the saving made, the guarding of the work has to be done by constant inspection accompanied by systematic sampling and assaying.

§ 828. STORING AND SHIPPING CONCENTRATES.—The settling, draining and drying of concentrates have already been discussed in § 349, § 442, § 618 and § 638. Only the shipment of them remains to be considered here. In looking through the mills there seem to be six methods of disposing of the concentrates after they have been unwatered or settled and dried. Of these the first four ship them in bulk, the fifth uses barrels, and the sixth employs sacks.

(1) The concentrates are wheeled directly to their place of treatment. This occurs at Mill 41 where the smelter is close to the concentrating mill and at several of the gold stamp mills which have their chlorination works but a short distance away.

(2) The concentrates are dumped into open cars direct and go to the smelter. This occurs at the Montana mills (38, 39, 40, 42 and 43) which have their smelters only a few hundred feet away. It also occurs at the Lake Superior Mill 44. The size of the cars varies; at Mill 38 regular drop bottom railroad cars are used while at Mill 40 the cars hold only 1½ tons each. Mill 44 has tight wrought iron side dumping cars the cross section of which is a parabola.

(3) The concentrates are wheeled into cars (usually closed cars) direct. This scheme is used in Mills 22, 25, 26, 30 and 34. Instead of wheeling to cars the stuff may go to wagons in which it is hauled some distance either to the railroad, as is the case with the coarse concentrates at Mill 27, or to the smelter direct as in Mill 2.

(4) The concentrates are wheeled to store bins which deliver either by gates and chutes or by shoveling to cars as in Mills 20, 21, 32, 87 and 92 or to teams as in Mills 18, 24, 27 and 88. The details in some of these mills are as follows: At Mill 20 the concentrates are brought to the concentrates house in a little car. The house is 10 feet deep and 25 feet wide and it delivers concentrates by gates and chutes to drop bottom railroad cars which are trammed by gravity two miles to the locomotive. At Mill 21 the bins are 12 feet long, 10 feet wide, and 6 feet high. Concentrates come to them by barrow and they are shoveled out into railroad cars. Mill 10 has a bin for zinc concentrates which is 13 × 17 × 6 feet deep and will hold 100 tons. This mill also has a small bin for lead concentrates. At Mill 24 the concentrates first drain on a mineral floor 10 feet square. Then they are wheeled in barrows to the shipping floor where they are shoveled into wagons and hauled to the smelter. The store bins at Mill 27 are for only the fine concentrates which come from the drier. The capacity of the bin at Mill 32 is 50 tons. At Mill 91, where the concentrates are magnetic iron ore and are made into briquettes, they go by conveyor to a large bank of store bins which will hold many hundred tons of these briquettes and the bins are arranged to deliver by gates and chutes directly into cars. Although only case (4) has store bins it is not to be understood that cases (1), (2) and (3) have no facilities

for storing concentrates. They may either have a reserve of cars and wagons on hand or else they may have large settling tanks in which the concentrates may accumulate. Cases (1) to (4), that is, shipping in bulk, include the greater part of the mills. When shipped in bulk in cars care must be had that the cars are tight since fine concentrates will run through a hole almost like water. At Mill 92 strong paper is used as lining to prevent the concentrates from passing through cracks in the car. Closed cars are more often employed than open cars as they offer protection from the elements and from theft.

(5) The most prominent instance to-day where concentrates are not shipped in bulk is most of the Lake Superior native copper mills which put their concentrates in barrels as fast as made. The details of the practice are illustrated by Mill 48, where the concentrates from Nos. 1, 2, 3 and 4 jigs are brought down in pails to the barrels, those from Nos. 5, 6, 7 and 8 jigs are shoveled from their settling boxes into barrels and those from the kieve are shoveled direct into barrels. In barrelling the copper a boy fills a barrel with concentrates, then runs in water and settles the concentrates by pounding the side of the barrel with a wooden mallet, adds more concentrates and pounds again and then adds a third batch of concentrates and finally draws a plug at the bottom of the barrel to run off the water. This process greatly reduces the shipping bulk. The reason for barrelling in these mills seems to be the richness of the concentrates combined with the fact that part of their journey is by land and part by water thereby requiring considerable handling in transit. The expense of barrelling and keeping the barrels (old oil barrels) in repair is considered to be less than the loss which would occur if concentrates were shipped in bulk. One exception occurs, Mill 44, which formerly shipped in barrels, but upon the erection of a smelter about half a mile distant substituted open cars.

(6) In regard to sacking concentrates there are only two of the mills visited (1 and 27), in which it can be positively stated that sacks are used although there may be a few others. The sacks are usually about 16 × 24 inches in size and hold 200 pounds or less according to the specific gravity of the material. Sacking is expensive and is to be recommended only in special cases, for example, when the ore is very rich, or when it is shipped in small lots, less than a carload, or when it has to be transferred two or three times as from team to railroad and from narrow gauge railroad cars to broad gauge.

The concentrates should be weighed and sampled before leaving the mill where two companies are concerned. But where the mill and the smelter both belong to the same company this work may be done at the mill or smelter as is most convenient.

The crushing of concentrates is not done to the author's knowledge in any of the mills visited by him. Whatever crushing is necessary before the metallurgical treatment is done at the smelter. One exception is noted at Mill 30, where coarse lumps of rich ore are picked out as rich enough for the smelter without being concentrated. These lumps are crushed in a rock breaker before being shipped. In foreign mills, however, according to Kunhardt, the concentrates are frequently crushed down to ⅛ inch in rolls or a Chili mill before sending them to the smelter.

§ 829. Disposal of Tailings.—In the majority of mills the location is such that the tailings go by gravity to the dump where the solid material accumulates and the water runs to waste. Where water is to be used again the tailings go to settling ponds as already described in § 349 and § 351. Where there is not sufficient fall for the tailings to pass off by gravity they are elevated either by sand wheels (see § 629), used in Mill 44, or by bucket elevators (see § 628), used in Mills 10, 40 and 43. In some of the foreign mills tailings are unwatered and elevated to a car which is trammed by man power over an extensive dump. This is

practicable there owing to the cheapness of labor. Mill 24 also hauls its tailings out by cars to the dump.

Where coarse and fine tailings are put on the dump together along with the water carrying them, the tailings pile will spread over a large area and have a very gently sloping surface. If the dumping ground is large then this does no harm, but in some cases the dumping ground may be limited. An example of this and its solution have been given in § 634.

The prospective value of tailings piles often deserves more attention than it receives. Ore dressing is progressing, and conditions are becoming more favorable so that many tailings piles are being treated to-day at a profit which were of no value when they were made. As an example of this we have Mills 68 and 82, which are recovering considerable values from their tailings by the use of cyanide, Mill 5 which is working over its old tailings by a Richards hydraulic classifier, canvas plants which treat old stamp mill tailings, and others. In almost every case the profits of this re-treatment would be much enhanced if at the time the tailings were made there had been any consideration for the possibility of future treatment. At some mills, for example Mills 13, 18, 19 and 40, certain parts of the tailings are being carefully preserved until such a time as they can be treated at a profit. The wisdom of this course has already been shown in Mill 18, where 150,000 tons of zinc tailings had been impounded. In 1899, when zinc was worth $0.06 per pound, several thousand tons were shipped to Belgium via Galveston. The Wilfley table is also able to treat this stuff profitably, making blende ore which is shipped and lead-silver-iron ore which is smelted.

The utility of tailings except for the possibility of future treatment is generally *nil*. Sometimes they can be used for filling. For example, in Mill 25 they are loaded into cars and hauled away to be used by the railroad for ballast and embankments. Mill 91 has a screening plant to be used in preparing the tailings for market to be used as mortar sand, locomotive sand, etc., etc.

§ 830. CARE OF MILLS.—Where the ore treated is rich and there is a large margin of profit a mill may be run in a hap-hazard way and still make a profit; this is not however to be commended. But where the mill is running on ore which barely pays expenses it is only by the strictest attention to details that a balance can be made on the right side of the ledger. The superintendent is forced to keep his eyes open for every little saving and improvement. As a rule it will be found that mill problems have been studied with the greatest care and the greatest advances have been made in the latter class. Hallett says that success in concentrating, even when the mill is adapted to the ore and is in perfect condition, lies in constant attention to detail, unceasing vigilance, plenty of assaying and ability to adapt the mill to varying conditions. To this might be added experience. Vigilance in every mill is necessary in looking after the men, the machinery and the supplies. It would be possible to enumerate a great many other points where vigilance is required. In gold and silver mills the condition of the quicksilver must be carefully watched.

An instance of a comparison between a far-seeing mill superintendent and a timid one has come to the notice of the writer in two mills just alike and treating the same ore. In one twelve ⅜-inch spigots of a distributing tank delivered pulp to four slime tables, while in the other, four of the twelve spigots were plugged, which gave a little less solid material and much less water. In the latter case the tables, relieved of part of the burden of water, worked to better advantage yielding concentrates 31% richer, and carrying a little more weight than the former.

In every mill all work should be done as automatically as possible so as to avoid unnecessary handling. Regularity in the rate of feeding, and as far as possible in the quality of the feed is essential to good work in any apparatus.

and will save time which might be lost from lack of feed or from repairing injuries due to over-feeding. As an example of this, Wethey reports that in Mill 43 he increased the capacity and efficiency of a Chili mill by feeding continuously in front of each roller instead of in one fixed place. Feeding by machine is generally preferable to feeding by hand, since it is usually cheaper and more efficient. A comparison at Raibl between feeding Salzburg tables by shoveling on the ore and by delivering it in a stream of water over a feed board gave the results shown in Table 387. These results are in favor of the machine feeding in every case on three sizes of pulp.

TABLE 387.—FEEDING SLIME TABLES.

	Coarse Meal.	Medium Meal.	Fine Meal.
Extra quantity fed in percent	7	6	24
Extra saving of lead in percent	2.6	25	12
Extra saving of zinc in percent	34	31	30
Decreased cost of operation in percent	14	9	33

Irregularity of output resulting from irregularity of feeding is often a cause of much annoyance. For example, in the case of a cyanide plant which is only just large enough to treat the average amount of ore crushed by a gold stamp mill, the output of the latter may be so variable as to cause losses due either to irregular treatment in the cyanide plant or else to the running of some material to waste without cyaniding.

§ 831. The adjustments of a machine after being once settled upon should be kept as nearly constant as possible and no machine should be expected to run without intelligent care. The quantity and quality of the feed to a machine should be proportioned to the ability of the machine and it is bad practice to undertake to force the machine or the whole mill since there is great liability that a breakdown may occur, or if not the work is inefficiently done, losses are greater and the net result is little if any gain. Little stoppages should be carefully looked after. In one mill it was found that these stoppages were greatly reduced by simply keeping a record of the cause and length of each; this seemed to put the men on their mettle. In another case where great annoyance was caused by drill points coming to the rolls this trouble was almost done away with by having the blacksmith refuse to sharpen any drill that was unaccompanied by its broken piece. At the same time the miners were fined for not picking up broken bits.

An economical mill man will look after his old material and not allow it to be thrown away. Among the opportunities of saving in this way which have been considered in previous chapters are the use of old mine rails or old stamp stems for grizzly bars, old boiler tubes for launders, old stamp screens for riffles, old trommel screens for jig screens, old jaw breaker toggles for pounding blocks, etc., etc. Under this head comes also the saving of values—in the gold stamp mill, for example, by treating in a clean up barrel the drainings and sweepings of the mill, the burned chips from the mortar, the old rusted screens, etc., or in a silver mill by running all the drainings of the mill through an agitator.

§ 832. PERCENTAGE OF EXTRACTION.—The question, how much can a mill save, or what saving will give the greatest profit, is always asked by the engineer who is planning to build a mill. Figures on the saving actually reported by the mills are given in Table 388. A summary of the data in this table shows that the extractions of zinc range from 25 to 98%, average 75%; of lead, from 62 to 90%, average 83%; of silver, from 40 to 90%, average 73%; of gold, from 30 to 98%, average 83%; of copper, from 70 to 85%, average 83%; of iron, from 81 to 95%, average 89%; two mills on pyrite show extractions of 96 and 97% sulphur. It will be seen that there is considerable variation in the different mills, the amount depending upon the individual conditions, as follows:

TABLE 388.—PERCENTAGE OF EXTRACTION AND LIMITS OF CONCENTRATION.

Mill Number or Name.	Percent Extraction.	Largest Size Concentrates Saved. (a)	Largest Size Tailings Thrown Away. (a)	Maximum Grain in the Finest Size to which Middlings are Recrushed.
1		Undersize of gravel screen	Undersize of ravel screen	No recrushing.
2		1¼ inch	1¼ inch	" "
3		¾ inch (b)	¾ inch (b)	" "
4		1 inch	1 inch	" "
5		2 inch	⅞ inch	" "
7		1 inch	⅞ inch	" "
8		About 1½ inch.	⅞ inch	" "
St. Symphorien		⅞ inch	⅝ inch	" "
9		(c)	(c)	(c)
10		½ inch	½ inch	Through rolls set close.
11	90% zinc	1 inch	1 inch and over	No recrushing.
12		2 mesh	2 mesh	" "
13	97% sulphur	¾ inch	¾ inch	" "
14		¾ inch	¾ inch	" "
Sulphur Mines & R.R. Co.	90% sulphur	⅝ inch	⅝ inch	" "
15	85% zinc	¾ inch (b)	¾ inch (b)	Through rolls set close.
16		20 mm	10 mm	" " "
17		10 mm	10 mm	" " "
18		0.14 inch	0.14 inch	No recrushing.
19		3 mesh	3 mesh	" "
Vieille Montagne	75% lead and zinc	20 mm	20 mm	About 1 or 2 mm.
20 (d)	85% lead, 66% silver 76% gold	0.25 inch	0.25 inch	Through rolls set close.
20 (e)	90% gold and silver			
21		0.18 inch	¼ inch	¼ inch.
23		0.4 inch (b)	0.4 inch (b)	Through rolls set close.
23		7 mm	7 mm	" " "
24	87 to 90% lead	10 mm	10 mm	⅜ inch (b).
25	85% lead	2½ mm	6 mm	Through rolls set close.
26	75 to 85% lead, 40% silver	5.7 mm	5.7 mm	0.54 mm.
27, old	90% silver and gold	38.1 mm	1 mm	1 mm.
27, new		19.1 mm	1 mm	1 mm.
28	Over 90% silver and lead	40 mm	16 mm	2 mm.
29	60% silver, over 90% lead	6 mm	6 mm	No recrushing.
30	76% lead, 72% silver	25 mm	25 mm	5 mm.
31	90% lead, 80% silver	Over 18 mm	Over 18 mm	2½ mm.
32, old		Over 10 mm	8 mm	2 mm.
32, new		15 mm	Over 15 mm	3 mm.
33	75 or 80% lead and silver	12.7 mm	12.7 mm	Through rolls set close.
34	75% lead, 50% silver	15 mm	15 mm	Data not given.
35	90% lead, 78% silver	Over 16 mm	Over 16 mm	2½ mm.
36		12.7 mm	12.7 mm	Data not given.
37	90% lead, 85% silver, 25% zinc	25 mm	20 mm	80 mesh.
Himmelfahrt	62% lead, 79% silver, 40% sulphur [421]	16 mm	16 mm	2 mm.
Laurenburg		25 mm	25 mm	1½ mm.
Clausthal		17.7 mm	13.3 mm	1 mm.
38		38.1 mm	2½ mm	1½ mm.
39		54 mm	2½ mm	2½ mm.
40	80 to 85% copper and silver	20 mm	3 mm	3 mm.
41		15.9 mm	3.2 mm	3.2 mm.
42		12.7 mm	4.76 mm	2.5 mm.
43	70 to 85% copper and silver	1 inch	19 mm	3 mm.
44		4.76 mm	4.76 mm	0.1 inch.
45		4.76 mm	4.76 mm	4.76 mm.
46	84% copper	4.76 mm	4.76 mm	4.76 mm.
47		4.76 mm	4.76 mm	4.76 mm.
48		4.76 mm	4.76 mm	4.76 mm.
49		60 mesh	60 mesh	80 mesh.
50		8 mesh	8 mesh	No recrushing.
51		¾ inch	¾ inch	" "
52		9.5 mm	9.5 mm	" "
53	90 to 95% gold, 65% silver	0 70 mm	0.79 mm	" "
54		24 mesh	24 mesh	" "
55	80% copper, 60% silver	1.10 mm	40 mesh	40 mesh.
56		1.60 mm	1.60 mm	No recrushing.
57	97% gold	0.79 mm	0.79 mm	" "
58		0.59 mm	0.59 mm	" "
59	85 to 95% gold	0 685 mm	0.685 mm	" "
60		40 mesh	40 mesh	" "
61	90% gold	0.81 mm	0.81 mm	" "
62	80 to 90% gold	0.75 mm	0.75 mm	" "
63	90% gold	25 mesh	25 mesh	" "
64	96 or 97% gold	0.69 mm	0.69 mm	" "
65		0.76 mm	0.76 mm	" "
66	75% gold	0.61 mm	0.61 mm	" "
67	97% gold	0.64 mm	0.64 mm	" "
68	80% silver, 85% gold	0.52 mm	0.52 mm	" "
69	98% gold	0.66 mm	0.66 mm	" "
70		No data	No data	" "
71		30 mesh	30 mesh	" "
72		0.56 mm	0.56 mm	" "
73	90 to 95% gold	0.76 mm	0.76 mm	" "

TABLE 388.—PERCENTAGE OF EXTRACTION AND LIMITS OF CONCENTRATION—*Continued.*

Mill Number or Name.	Percent Extraction.	Largest Size Concentrates Saved. (a)	Largest Size Tailings Thrown Away. (a)	Maximum Grain in the Finest Size to which Middlings are Recrushed.
74	90 to 95% gold	0.76 mm	0.76 mm	No recrushing.
75	75% gold	1.13 mm	1.13 mm	" "
76		30 mesh	30 mesh	" "
77	94% gold, 74% silver	0.43 mm	0.43 mm	" "
78	50% gold	Very fine	30 mesh	" "
79	55% gold	Very fine	0.56 mm	" "
80	80% gold	Very fine	0.76 mm	" "
81		None	0.76 mm	" "
82	68% silver, 87% gold	0.52 mm	0.52 mm	" "
83	80% silver	0.42 mm	0.42 mm	" "
84	82% gold, 70% silver, 85% lead and copper	0.41 mm	0.41 mm	" "
85		4 mesh	Below 12 mesh	Stamped fine.
86	90 to 98% gold, 75 to 85% silver	9 mm	1¼ mm	0.43 mm.
87	85% silver, gold, copper and lead	8 mesh	30 mesh	30 mesh.
88		8 mesh	0.64 mm	0.64 mm.
89	90% iron	2.1 mm	2.1 mm	Through rolls set close.
90		6.4 mm	6.4 mm	" " "
91		0.5 mm	1.5 mm	0.5 mm.
Joseph Wharton	81% iron	¼ inch	¼ inch	Through rolls set close.
Witherbee-Sherman	95% iron	4 mesh	16 mesh	16 mesh.
92	Over 98% zinc	1.5 mm	1.5 mm	No recrushing.
93		6 mm	Below ¼ inch	" "
Monteponi Zinc		30 mm	30 mm	Through rolls.
Monteponi Magnetic		6 mm	6 mm	Through rolls.
Elmore Oil Concentration Mill.		30 mesh	30 mesh	No recrushing.
Canada Corundum		12 mesh	11 mm	1.5 mm.
King Brothers Asbestos Mine		19.1 mm	1.6 mm	Through fine grinder.

(a) Not including sizes hand picked. (b) Through rolls set at this space. (c) Practically same as Mill 10. (d) From galena ore. (e) From pyrite ore.

(1) *The Ease of the Separation.*—An ore with considerable difference in specific gravity between the valuable mineral and the waste, and with the valuable mineral in coarse crystallization and not of a friable character, will yield a high extraction. The opposite conditions, however, will make the problem difficult, and reduce the saving, even though extra care is taken in the dressing. Note in Table 388 that the saving of silver averages less than gold or copper, probably due to the greater friability and finer dissemination of silver minerals as a rule.

(2) *The Value of the Ore.*—The more valuable the ore the greater is the extraction, as a rule. There are two reasons for this: First, a rich ore justifies more care and expense in the treatment; second, it is possible to reduce the tailings from a rich ore to nearly the same value as those from a poor ore. As an example of the second statement, the results of three runs on three lots of Nova Scotia free milling gold ore of different grades, but from the same mine, are given as follows:

	Ore Assay in Ounces Gold per Ton.	Tailings Assay in Ounces Gold per Ton.	Percent of Gold Extracted.
Run 1	1.23	0.06	95.12
Run 2	0.33	0.06	82.74
Run 3	0.08	0.05	46.18

These figures are more favorable than would be obtained from many ores—for example, galena ores.

§ 833. (3) *The Obtaining of the Maximum Profit.*—This is perhaps the greatest factor of all in deciding the percentage of extraction. The extra care and expense necessary to obtain a high saving may more than offset the extra

amount recovered. This will be clear from the following table, made up on the assumptions that an ore containing 5% copper is being treated, that copper is worth $0.15 per pound in the form of concentrates, that 400 tons of ore can be treated per day when 75% is saved, while only 50 tons can be treated when 95% is saved, and that the costs vary according to the amount of ore treated.

Ore Treated per Day. Tons.	Cost per Ton for Mining.	Cost per Ton for Milling.	Total Cost.	Percent Extraction.	Value of Product.	Profit	
						Per Day.	Per Ton.
50	$3.00	$2.00	$250	95	$712.50	$462.50	$9.25
100	2.25	1.30	355	90	1,350.00	995.00	9.95
200	1.50	0.80	460	85	2,550.00	2,090.00	10.45
400	1.00	0.50	600	75	4,500.00	3,900.00	9.75

This indicates that it is probably better to aim for an extraction of about 85%, treating 200 tons, in this particular case. Possibly it might be wise to go up to 90% extraction, treating 100 tons; this would depend upon whether the future value of the 100 tons left in the ground might increase, owing to improvements in ore dressing and in the value of the product, and also upon whether the investor desired to make a large or a small investment and a quick or a slow return. The best results technically are not always the best commercially.

The American idea appears to be: Simple mill, small investment (in proportion to tonnage), high capacity, reduced cost, reduced percentage of extraction, increased profit per ton and quick return on the investment. The European idea, in many cases, appears to be just the opposite.

(4) *The Amount of Concentration, or, in Other Words, the Purity of the Concentrates.*—It is obvious that the cleaner the concentrates, the greater the losses in the tailings, and consequently the less the saving. Here, again, it is a question of dollars and cents—whether the increased value of high grade concentrates more than offsets the increased losses in the tailings. Local conditions have to be studied to decide this point; high freight rates will make it desirable to eliminate as much gangue as possible; smelting charges usually decrease as the quality of the concentrates increases, except in cases where the nature of the gangue is such as to make it valuable as a flux; penalties are put upon certain ores by the smelters—for example, on lead ore with over 10% zinc in Colorado, and in order to comply with these requirements it is necessary to sacrifice some of the lead, thereby lowering the percentage of extraction.

§ 834. Limit of Concentration.—This is, as we have already seen, a purely commercial limit. The mill man should chase the values just as long as the amount recovered yields a profit over and above the cost of getting them; in reckoning this cost, the interest on the investment should be included.

Cases may occur where a mill is built on the instalment plan. Let us suppose that we have an ore in which the valuable mineral is in coarse crystallization. Then the simplest operation would be to crush the ore and jig it straight without any sizing or classification, the products of the jigs being finished products. Such a plant would probably yield the greatest initial catch. The next addition would probably be to introduce sizing and classifying apparatus, yielding products to be treated separately on different jigs. Next, fine concentrators might be added to save the values in the finer portions of the ore, which cannot be treated by the jigs. Each addition would result in a higher percentage of extraction. Attention would probably next be given to the middlings products, and apparatus would be installed to treat them—both crushing and washing machinery for the coarse middlings, and washing machinery alone for the fine middlings. Investigation of the slimes might show that it would pay to add a canvas plant to save the finest material. Thus additions might continue for the re-treatment of the middlings just as long as the values recovered exceed the cost of recovery.

To show how this question is solved in the mills, data has been collected, which is given in Table 388. This tells for each mill the largest size of concentrates saved, the largest size of tailings thrown away, and the maximum grain of the finest size to which middlings are recrushed. In constructing the table, no attention was paid to products obtained by hand picking, since many mills save smelting ore and also throw away waste from the ore as it comes from the mine, and to include these sizes would make the data misleading.

Careful study of the table will bring out many facts. The general rule seems to be to save the concentrates as coarse as possible, but to crush the tailings considerably finer before throwing any away. Those mills in which there is no recrushing have concentrates saved and tailings discarded both at the same size. Such are the hand jigging mills (1, 2 and 3), and the sulphur mills (13 and 14), where it does not pay to treat the products further. The gold mills (56 *et seq.*) crush so fine at the start that the concentrates and tailings are both of the same size. There are two mills in the table (25 and new Mill 32) which are exceptional in that the maximum size of the tailings is larger than the maximum size of the concentrates.

The finest sizes to which middlings are crushed, varies considerably in Table 388. In those mills which do not recrush middlings, we might consider that the middlings are as large as the concentrates, while in other mills the middlings are much smaller than the concentrates; for example, in old Mill 27 the crushing of middlings is continued down to $\frac{1}{38}$ the size of the coarsest concentrates.

Every mill man should see that he has carried his concentration to the limit. Familiar examples where the limit has not been reached in the past are as follows: The Cornish tin mills send away so much value in the tailings that the treatment of them by stream workers is a lucrative business. A similar state of affairs occurs in some Australian gold mills which have little or no concentrating machinery. Canvas plants, treating tailings from gold mills and other mills in this country, save values which formerly went to waste. Some of the mills at Butte, Montana, recrush and rewash jig tailings formerly thrown away.

There are two sources of loss which may occur and which it is proper to speak about here: Valuable fine material may escape by being attached to coarse waste in the form of dust or slime. Comparatively large sizes of concentrates may be carried off into the tailings by greasy flotation.

The mill man will find that his medium sizes of concentrates are generally the richest. The value of the coarse sizes is reduced by the presence of gangue attached to the valuable mineral in the form of included grains, while the fine sizes contain some free grains of waste which are difficult to remove.

§ 835. TENDENCY AND FUTURE.—The tendency is distinctly toward graded crushing, graded sizing and graded washing. The jigging of larger sizes is being experimented upon until certain mills are jigging 1 to 1½-inch stuff with good results in the prevention of slimes and in diminishing the cost of crushing. Although the invention of tables of the Wilfley type has given some strength to the plan advocated by Hallet and Bartlett of breaking the whole lot of ore to a small size before abstracting any portion of the values, yet this scheme seems destined to be of limited application only, since the former scheme has two great advantages over it: the lump ore is not slimed with its resultant losses, and the power for crushing it is saved.

The future progress to be made in ore dressing will probably be more in the development and perfection of the existing processes and machines than in the introduction of new processes. Not that new processes do not appear.—for they are brought out constantly,—but their disappearance is usually as sudden as their appearance. The modern wet concentration method seems eminently suited to most of the problems, but it is weak or altogether fails when there is only a slight

difference in specific gravity between the mineral and gangue or when water is lacking, or when dealing with very fine slimes. Under these conditions it becomes necessary to make use of some one of the special processes given in Chapter XVIII. For the separation in such cases a broad theoretical basis is lacking.

The future of ore dressing as it will be affected by the tables of the Wilfley type which have been so successfully substituted for slime tables, vanners and fine jigs is still undecided. It seems possible that by modifying the riffles and the adjustments this principle may be applied with success to much coarser material than at present attempted. Time alone will answer this question. It seems certain, however, that the tables of the Wilfley type have not yet reached the limit of their possibilities.

Similarly the author believes, in the light of certain experiments he has made, that slime tables may be used successfully upon coarser sizes than at present.

§ 836. Of all the suggestions that the author has to make for the future, the one to be particularly emphasized is more experimental study. Hardly a question has been discussed on which our knowledge is complete, and on many it is entirely lacking. Ore dressing is a difficult art, from the fact that no two ores are alike, and a process must be studied out for each. The difficulty of the problem is commonly undervalued. One mill is designed to separate galena, blende and quartz in Missouri and another for Colorado, but if either was erected in the other place it would make an entire failure. The Colorado mill treating galena, blende and quartz has graded crushing and sizing and crushes everything to ¼-inch or less, while the Missouri mill with the same minerals simply crushes to a limiting size of ½-inch or larger and jigs everything on a coarse jig with open bed and much suction, thus quickly throwing away a large amount of waste and re-treating the "smittem" or remainder on other jigs. The difference is due to comparatively fine crystallization in Colorado and coarse in Missouri, and to the fact that the Colorado ore carries enough silver to justify more expense than the non-argentiferous Missouri ores. Another example is Mills 44 and 47, which are both in the same locality and both treat native copper rock. Mill 47 has considerable mass copper, so that about 30% of the total product is removed by hand picking (assisted considerably by drop hammer and sledges). Mill 44 has less mass copper, though there is considerable hand picking. Mill 44 has copper so finely disseminated that there has to be more re-treatment of products than at Mill 47.

Ore dressing is generally left to self-taught men who may be quick witted, but who, as a rule, do not know what is going on in other parts of the world. They are oftentimes not even backed by the management. They take samples of tailings and send them to headquarters, assays are made and results put on file in the office for the benefit of posterity, but the mill man never sees the results, and he is the one man who, by seeing and understanding them, can bring profit to the owners therefrom. Ore dressing should be made a profession. There is often more to be saved by good ore dressing than by anything else about the mine.

§ 837. The slimes question is one point on which the author believes there is much room for improvement. In discussing this question there are two ideas to be considered: first, the means of preventing slimes as far as possible; second, the arrangement for treating such as are unavoidably made.

For the prevention of slimes the use of graded crushing, graded sizing and graded jigging is probably the greatest help. This has been previously discussed in several places in the book and needs no further explanation here. For the crushing, rolls are to be preferred in general to stamps and most other fine pulverizers. Only on rare occasions, as for the very fine crushing of middlings, is the use of stamps justifiable. As an example of how much material may be

carried off as slimes, it is stated that on Rand ores in South Africa, where the pulp from stamps passes over *spitzkasten* which yield spigot products to cyanide treatment and overflow to waste, the slimes in the overflow amount to approximately 40% of all the stamp pulp that would pass through a 90-mesh sieve. Less fines are also formed when crushing is done wet than dry. Screening between the breaker and rolls and also the use of separate rolls for coarse and fine material will reduce the amount of slimes. On a soft galena-blende ore at Ramsbeck, in Westphalia, the grizzly has only 30-mm. spaces, instead of the usual 50 or 60-mm. This sends finer ore to the cobbing and avoids much of the fines which would be made if the stuff between 30 and 60-mm. were crushed direct by machine. While graded sizing will save losses by slimes, yet, when carried to extremes, the advantage desired may be lost owing to the large amount of attrition which results from the rounding of the grains in passing the ore over the large number of screens and concentrators necessary when close sizing is used. This attrition causes losses in slimes. Attrition may occur in other ways, and to keep it down all unnecessary handling of the ore should be avoided and the necessary handling should be done by proper machinery. For example, the use of centrifugal pumps, especially of the radial discharge type, is to be condemned for elevating soft ores like galena; bucket elevators would be better. There is one loss from attrition that cannot well be prevented, and that is from the wear that occurs in the bed of a jig.

Slime losses may be reduced by taking care that where the coarse is separated from the fine it be thoroughly done. By exercising this care not only will losses of slimes be saved, but the washing of the coarser material is better and easier done. Examples of losses of slime from its being mixed with coarse are on jigs which are fed with imperfectly classified material, slime tables and vanners fed with extremely fine pulp mixed with the coarse. On the slime tables the very fine concentrates are lost off the sand side of the table, while on the vanner they pass down with the tailings. The remedy for both of these losses is to separate out the extremely fine and treat it by itself. Greasy flotation (see § 2) is a source of slime loss which may be partly prevented by making sure that the ore is thoroughly wetted at the start and that during the course of its treatment it does not have an opportunity to partially dry again. For getting the slimes away from the coarse as early as possible all the ore at Ammeberg, Sweden, below 2.5 mm. goes to a hydraulic classifier, which takes out the slimes and leaves the relatively coarse to go to fine screens. At Clausthal a similar plan is followed (see § 290).

There are two ways in which the dilution of fine slimes may be cut down: First, by screening to finer sizes, adopting the European limit of 1 to 1½ mm. for the finest screen instead of the 2 to 3 mm. size generally used in this country; second, in cutting down the number of ordinary hydraulic classifiers (see § 286).

The actual treatment of fine slimes is by no means an easy problem. Some mills, for example Mills 18, 19, 41, 42 and 43, settle the whole overflow of their classifiers and send these settlings directly to the smelter without any further treatment. Extremely fine slimes should not ordinarily be treated on a vanner, but rather on a slime table or on a canvas table, because the shaking motion does not allow the fine particles to settle out of the rapid upper layer of water. The use of cleats on the Wilfley type of tables, however, favors the treatment of fine material.

§ 838. TREATMENT OF MIDDLINGS.—(For the definition of middlings, see introduction preceding Chapter VIII.). All of the coarser sizes of middlings contain the valuable mineral mostly as included grains; these must first go to be broken finer before they are further treated. The finer sizes of middlings have the valuable mineral more in free grains, but they are flat or elongated and hard

to separate from the more compact gangue. These require further slower and more careful treatment to separate them.

The behavior of these grains under the various sizing and sorting operations which the machines give is such that a grain once found in middlings will again go there if re-treated on the same machine. In other words, "once middlings, always middlings." The continued re-treatment of middlings on the same machine would, therefore, make an accumulation impossible to deal with if it were not that readjustments are involuntarily made by the machine tender pushing the richest part of the middlings into the heads, and poorest into the tailings, bringing down the percentage of values in the heads and raising them in the tailings.

The middling product is so different in quality from the feed from which it was derived, that it deserves to be treated on a special machine which is properly qualified to handle it. The only conditions under which it is wise to send middlings back to be fed over is where the quantity is too insignificant to warrant installing a special machine for their treatment. Mill men have not, as a rule, sufficiently appreciated this.

Examples of the foregoing are as follows: In skimming jigs, more especially hand jigs, the middlings are put back (see § 374). In Mill 24 hutches of No. 6 jig are returned to No. 1 whole current box classifier, which sends them again to No. 6 jig. Mills 23, 24, 29 and 86 send the slime table middlings back to the table either directly or through a classifier. In Mills 22 and 35 the slime table middlings are sent way back into the system, but it seems reasonable to suppose that they ultimately come around to the table again. In Mill 21, however, the slime table middlings are reground and then go back to the tables through a classifier. At Przibram some of the middling products are treated on the same machines that produced them. On the Wilfley table the middling product is simply elevated back and fed to the table again or goes to another table. The Wilfley table is an especially good instance of middlings used as a guard between the heads and tailings to avoid constant care and attention, since its action is such that the line of demarkation between the heads and tailings is liable to be constantly shifting back and forth over a limited area.

Accounts and Reports.

§ 839. In mining and milling the manager should so organize his accounts that he can tell periodically—once a month is commonly found to be a good interval—what have been his expenses for labor and supplies and other things, and what his income from the sale of ores, concentrates or metals. The comparison of these, when properly interpreted, will tell him whether he is making or losing money.

As milling is simply a subdivision of the whole account system of the mine and mill, the author will not attempt to deal with it alone, but will consider the whole together.

There may be three lines along which it will be desirable to have records. (1) The amount and cause of each item of expense incurred (labor, supplies and other expense) in order that a total may be summed up periodically; similarly, the amount and source of each item of income. (2) The distribution of the various items among the various subdivisions of the work in order to obtain a periodical summing up of what each part of the work, for example, the milling, is costing. (3) The distribution of the various items of expense and income to the different lots of ore from different parts of the mine in order to determine whether some parts may not be working at a loss which cuts down the profit from the other parts. The benefits of this part of the account system are generally lost sight

of, and it is consequently rarely practiced, but the author believes that where it is practicable, it is the most satisfactory method of maintaining a continual test of the mine.

In order to make the accounts complete and to enable comparisons to be made, records of the weights of ore and products have to be kept and the accounts reduced to a common unit, for which a ton of 2,000 pounds commonly serves.

The importance of accounts and reports cannot be overestimated. The extra cost of keeping them will be more than offset by the saving made through their study. They will show the variation in cost and the profit and loss for each branch of the work, and the variation from week to week or month to month. A careful comparison and study of the reports by a manager will result in many little savings and stop many losses through leaks and waste. If time lost and the cause thereof appears in the report blank, the manager is able to locate the responsibility, and by speaking to the foreman, the proper remedy will be applied and the time lost will rapidly diminish. If poor concentrating is reported, the foreman will work up to the highest pitch of efficiency. The importance of having these reports all at one central point needs no comment.

§ 840. Many designs have been made for blanks and modes of keeping accounts. For these the reader is referred to the Bibliography at the end of this chapter.[6, 177, 222 and 328] The following is suggested as an outline of points to be covered from which designs may be made:

(1) *Excavating expenses,* including labor, drills, powder, fuse, lights, timbers, etc. These may be divided into stoping ore, dead work on shafts, cross cuts, etc., and exploration expenses.

(2) *Tramming, hoisting, pumping; ventilation, air compressing, etc., expenses,* including labor, fuel, oil, other supplies, repairs and replacements on cars and tracks, repairs and replacements on rope, cage or skip, shaft and engine; similar figures on the pumping, ventilating and compressing machinery.

(3) *Surface expenses,* including carpenter, blacksmith, machinist and other general surface labor and supplies; also landing and tramming the hoisted ore.

(4) *Milling expenses* for power, pumping and concentrating, including labor, fuel, oil, other supplies, repairs and replacements.

(5) *Shipping expenses,* including the cost of shipping and marketing of the products.

(6) *Construction expenses,* including labor and material for all new additions and improvements to the plant.

(7) *General expenses,* including management, office expenses, assaying, sundries, etc.

(8) *Occasional expenses,* including litigation, strikes, accidents, etc.

(9) *Depreciation expenses,* including interest on investment on whole plant, and sinking fund to cover depreciation in machinery and buildings and the working out of the mine.

(10) *Total cost,* figured from all the preceding, and the total tonnage, from which can be figured the cost per ton.

(11) *Receipts,* which may be divided into: (*a*) mine figures, including the tons of ore and waste mined, with the assay and gross value of the ore; and (*b*) the mill figures, including tons of ore milled, with the assay and gross value of the same; tons of picked mineral and concentrates or weight of metal, bullion, etc., with assay and gross value of the same; tons of tailings (by difference), with assay and gross value.

(12) *Comparison of mine and mill work* may be on total gross value of mine ore, as compared with total gross value of mill products.

(13) *Total net value of yield,* including gross value of picked mineral,

concentrates, metal, bullion, etc., from which have been deducted smelter charges, smelter losses and freight. Value is reckoned as *total net value* for the month, and as net value per ton of ore mined.

(14) *The financial standing* may be obtained by comparing the total cost per month with the total net value for the month, or by comparing the cost per ton with the net yield per ton.

For further suggestions for the way that items are segregated, the reader is referred to the subject of costs (see § 846 *et seq.*). In this connection should be noted the variation found in the methods used by different companies. For example, some companies will charge an item to construction account, whereas others will charge the same item to operating expenses. Comparisons of the work of different companies are not easily made under such conditions, and it is to be hoped that the day may soon come when a standard system of accounting and reporting will be in use. Suitable blanks will be designed for daily reports of assayers, weighers, shift bosses, mine and mill foremen, engineers, storekeepers, shipping clerks, etc.; in fact, along all lines which contribute in any way to the monthly cost or monthly yield. The monthly account will be made up from these daily reports.

The final monthly figures may be summed up into a quarterly or yearly report, which gives the most valuable view of the progress of the work.

Reports of custom mills are practically records of tests. Examples of such reports of tests are given in § 891 and § 893.

Costs.

§ 841. Cost of Erecting Mills.*—The original cost of a mill depends upon the following considerations:

(1) The capacity of the mill. The cost increases with the capacity, but not in direct ratio.

(2) Mill site and the general nature of the mill. A steep sloping mill site will require expensive masonry, retaining walls and costly grading, which are not required if the mill is on a flat or gently sloping site. Upon the mill site will also depend the cost of the equipment for getting and storing water and bringing it to the mill, for bringing ore to the mill, for shipping concentrates and for disposal of tailings.

(3) The internal details of the building (in grouping and placing various machines together) and the choice of the materials used in the construction. Some mills use heavier machinery than others, and hence require heavier construction. Some mills need to be much more carefully built to withstand the elements than others.

(4) Cost of machinery at the foundry.

(5) Duties and commissions paid on it, if any.

(6) Cost of railroad freight and transportation from the nearest railroad station. This latter is often a very large item.

(7) The local cost of labor and timber and other structural materials delivered.

(8) The efficiency of the labor employed in erecting the plant.

(9) The period at which the mill is built, the cost being more at a time of general prosperity than at a time of business depression. Improvements can be made with the least cost in dull times; on the other hand, mills can be run with the greatest profit in flush times.

(10) The duration of time that the works are under construction, depending

* For a very complete analysis of the cost of building and running mills, with tabular data, the reader is referred to an article by A. G. Charleton.[398]

more or less on the willingness and ability of the company to make a heavy outlay in a short time, or to distribute the outlay over a longer period. A mill will cost more when it is required to be finished within a short specified time than when the builder is allowed to take his time. An extremely long time of construction may be objectionable, however, on account of the loss of interest on idle capital and of the earning power of the mill.

§ 842. Only a few examples of cost are available to the author. In using these the reader should bear in mind that the cost of materials fluctuates owing to the relative prosperity of the times, and consequently that any examples given should be used merely as approximations in estimating new work. The plan now generally used by engineers in making estimates of cost of concentrating plants, after deciding the method of treatment, is to apply to one or more firms for bids. The most complete figures in the writer's possession are those given in Table 389 of a mill with a capacity of 350 tons in twenty-four hours. This

TABLE 389.—COST OF A 350-TON MILL IN 1891.

Abbreviations.—B. M.=Board measure.

	Cost at Factory.	Weight. Pounds.	Cost of Freight.	Totals.	Grand Totals.
Plans					$345.00
Foundations:					
Labor, grading				$1,008.13	
Driving 98 piles, at $3				294.00	
Timber in piles, 1,325 feet at 8 cents				106.00	
Cutting off piles, planking up, etc				624.00	2,032.13
Building:					
Advertising for bids				7.80	
Labor cost to contractor at $13.50 per 1,000 feet (B. M.)				2,404.67	
Contractor's profit				1,095.33	
Lumber, 137,464 feet (B. M.) at $12 to $13				1,664.81	
Lumber, 40,800 feet (B. M.) at $22.50				918.00	
Asbestos sheathing	$235.20	2,400	$54.52	289.72	
Corrugated iron roofing	304.60	8,263	221.92	526.52	
Paints and miscellaneous hardware	1,165.31	9,000	155.46	420.77	
Bolts, washers, windows, etc				900.00	
Labor painting at 6 and 8 cents per square yard				194.50	8,422.12
Machinery:					
Two No. 2 Gates breakers	2,042.00	26,300	519.70	2,561.70	
Eight revolving screens, complete	1,100.00				
Machinery for 4 belt elevators	260.00				
All gearing	1,200.00	71,715	1,353.90	6,529.90	
All shafting (steel), boxes, pulleys, etc	2,616.00				
All belting	735.00	2,200	40.92	775.92	
Two pairs 24x14-inch rolls	940.00	15,000	299.00	1,239.00	
Two pairs 22x10-inch rolls	870.00	14,500	290.00	1,160.00	
All iron work for four 2-compartment jigs					
All iron work for twelve 3-compartment jigs	3,037.00	24,000	505.45	3,542.45	
All iron work for sixteen 4-compartment jigs					
Lumber for jigs, 29,400 feet at $22.50				661.50	
All iron work for 2 double-deck Evans tables	525.00	3,700	68.80	593.80	
Lumber for these tables, 8,050 feet at $22.50				181.12	
All screens, cast and wrought spouting, bolts, etc	1,125.00	23,425	455.70	1,580.70	
Miscellaneous hardware and pipe fittings	860.09	10,000	139.07	999.16	
Lumber for elevators, spouting, tanks, etc., 2,688 feet at $17 and $18; 90,093 feet at $22.50				2,074.25	
Pan conveyor, 140 feet long (not used)	1,481.00	14,315	328.27	1,809.27	
30½-inch Leffel turbine	1,006.63	8,250	173.45	1,180.08	
Wrought iron pipe and fittings	446.20	2,145	55.04	501.24	
New jig gates, extra belting and elevator cups	433.88	2,170	70.45	504.33	
One corrugated-belt Frue vanner	750.00	2,300	72.45	822.45	
Three plain-belt Frue vanners	1,500.00	6,500	120.90	1,620.90	
Miscellaneous castings	122.95	600	1.10	124.05	
Two centrifugal pumps (not used)	180.00	2,000	97.15	277.15	
Electric light plant; capacity 150 lamps of 16 candle power	838.00	2,000	60.00	898.00	
Hot air heating plant	965.00	19,250	480.00	1,445.00	31,081.97
Labor Erecting Machinery:					
32 jigs				2,670.00	
Two double-deck tables				500.00	
Four Frue vanners				100.00	
100-foot pan conveyor and replacing it by a track and hoist for a car				200.00	
Replacing two centrifugal pumps by belt elevators				500.00	
Placing all shafting and other machinery; building spouting, elevators, trommel housings, classifiers, tanks, etc.				2,129.47	
Contractor's profit on $6,500 of this work				1,723.40	7,822.87
Totals	$24,738.86	270,003	$5,563.25		$49,704.09

mill was built in 1891, when the price of iron was $15 to $18 per ton, and in a district where water was available for power and labor received good wages.

§ 843. For a ten-stamp mill in Montana in 1895, having no amalgamated plates, but with classifiers and three vanners, the bid of a firm in the Mississippi valley was $4,707 "free on board," the total weight being 72,895 pounds. A firm on the Pacific coast bid $5,200 to supply the same outfit, but weighing 68,000 pounds. This makes the cost per stamp $470.70 and $520 in the two cases, respectively. To get the total cost of the mill, it would be necessary to add the cost of the building and of the freight and installation of machines.

Bids for the machinery for a twenty-stamp gold mill in Nevada in 1899 were as shown in Table 390:

TABLE 390.—COST OF A TWENTY-STAMP MILL IN NEVADA.

	At Chicago.		At Denver.		At San Francisco.	
	Weight. Pounds.	Cost.	Weight. Pounds.	Cost.	Weight. Pounds.	Cost.
Machinery for 20-stamp mill.....	123,320	$11,500	127,000	$10,272	120,000	$9,750
Power for same.....	61,000	6,759	.....	.....	66,000	9,135
Water supply for same.....	31,000	1,800	26,300	1,718	26,000	2,400
10-ton sampling works for same.....	9,000	880	15,000	1,510	8,000	1,525

In addition to the machinery, there were required 131.93 thousand feet of lumber for frame and floors for the mill and sampling works. This lumber (Oregon pine) cost $17.50 per thousand feet "free on board," or $60 at the mill. There was also required corrugated iron for the roof and sides, but the cost of this was not obtained. The cost of railroad freights per 100 pounds was $1.90 from Chicago, $1.40 from Denver and $1.10 from San Francisco. The cost of hauling stuff by wagon twenty-five miles from the railroad to the mill was $10.50 per ton.

A small concentrating plant in Montana in 1895 cost $4,540 for machinery "free on board" in the Mississippi valley. This included one 10x15-inch Blake breaker, two 20x10-inch Cornish rolls, two trommels, three jigs, two vanners, one centrifugal pump, one grizzly, pulleys, belting and one 50-horse power engine and boiler.

The cost of the hand jig mills of Missouri is simply the cost of the hand jigs. A complete mining and jigging plant costs about $185, distributed as follows: Two roughing hand jigs at $25, $50; 1 cleaning hand jig, $25; 1 horse whin for hoisting, $40; frame, $20; a pair of mules, $50.

Mills in Southwest Missouri of the type of Mill 9 and Mill 10, cost $7,000 or $8,000.[362]

The cost of Mill 50 was as follows: machinery "free on board," $3,325; freight, $975; building, $1,000; installation, $1,000; total $6,300, not including assay office, pipe line and reservoir.

Mill 78, which is a canvas plant, was built at a cost of $2,000, including everything.

The plant at Monteponi (see § 779), cost about £16,000 ($77,760), including permanent way and wagons for transporting the ore between the mines, the concentrators and the smelters, but not including the magnetic plant.

A rough rule given by Vezin for the cost of buildings is, that space in Colorado mills does not cost more than about 15 cents per cubic foot, and sometimes much less. This includes all the space between the floor and roof.

§ 844. COST OF MILLING, INCLUDING IN SOME INSTANCES THE COST OF MINING.—The cost of milling will vary greatly in the same locality, and will depend upon the following considerations:

(1) The general design and internal arrangements of the mill building for economizing labor and simplifying the plant, depending to a great extent upon the

selection of a suitable site and its proper utilization, also upon the heaviness of construction and care in erection. The following examples illustrate this: Of two 40-stamp mills the difference in design makes one employ 16 men, while the other requires 24 men. If they were 80-stamp mills the number of men would be 26 against 44. Besides the smaller number of men, there is also a saving in supplies and repairs. At the old El Callao mill in Venezuela in 1882 the cost was 78.30 francs ($15.11) per ton, while in the new mill in 1892 it was 6.22 francs ($1.20). Of two 66-stamp mills in Venezuela one was poorly designed and built, and crushed only 93 tons daily at a cost of 18s. 9d. ($4.56) per ton, while the other embodied the results of a practical millman's experience, and crushed 143 tons daily at a cost of 6s. 3d. ($1.52) per ton. Note the difference in cost of treating material in the new and the old Himmelfahrt mill in § 857 ($0.17 and $2.08 per ton, respectively).

(2) The general nature of the process depending upon the kind of ore to be treated. The finer the crushing and the more complicated the plant the more costly will be the operation. Iron ores are washed by a simple plant at a cost of only a few cents per ton, while the treatment of silver ores by the combination process usually costs at least $1.00 per ton. It is clear from this how important it is that the selection of the process be made only after thorough tests.

(3) The capacity. The larger the capacity of a mill the smaller will be the cost per ton, since many items of expense, such as management, skilled labor, taxes, insurance, etc., are fixed charges and increase very little with increased capacity, and even common labor does not increase in proportion to the tonnage. Also there is a saving in a big mill from the buying of supplies in large lots and the making of repairs on a large scale. Increasing the capacity of a mill may, by cutting down cost, allow poorer ore to be treated. This will cut down the average yield, and at the same time the profit per ton, but the total profit with the larger quantity and lower yield per ton will be greater than the total profit with the smaller quantity and the higher yield per ton. To illustrate this, compare the cost in the Alaska Treadwell mill in § 853 with that of some of the small 40-stamp mills. The new El Callao gold stamp mill in 1888 crushed 15,692 tons at a cost of 18.40 francs ($3.55) per ton, while in 1891 it crushed 58,949 tons at a cost of 6.29 francs ($1.21) per ton.

§ 845. (4) The continuity of running. This is a great factor in cost. A mill that is idle half the time has to keep much of its labor on the pay roll so that the monthly expense will not be in proportion to the time run. If the mill is idle for the purpose of repairing breakdowns, it may happen that the total monthly expense, including repairs, will be greater than the cost of running the mill continuously for a month. Charleton reports a mill which, if run continuously, could treat ore at the rate of 5s. ($1.22) per ton instead of 10s. ($2.43) as actually run. The above facts call attention to the evil of building a mill too large for the ore supply or of building any mill until the ore in sight warrants it. There often are exceptions to the last statement, where the cost of running a small mill part of the time is less than that of shipping the ore to a distant custom mill.

(5) The efficiency of the labor employed and its cost. In a large mill the labor is more effective, since it is more specialized, the skilled labor and unskilled being engaged in their special lines all the time, while in a small mill the skilled labor either is idle part of the time or else engaged in doing lower class work. In large mills automatic devices saving labor are more used. It is best to avoid cheap skilled labor as a rule, for by paying higher wages, more intelligent men are secured who will be better satisfied and will be more than worth their extra cost. By having intelligent skilled labor it will be found that many improvements

will be made and costs will be reduced, which are not so likely to occur with cheap skilled labor.

(6) The quality and price of supplies, fuel, etc., used. Supplies cost much more delivered to a mill in a remote district than to a mill near the railroad.

(7) The power employed and its method of application. Many California mills obtain water power at a low cost, while the mills in the Black Hills have to use steam power at quite a large expense.

(8) The situation of the works as regards water supply, transportation of ore from the mine to the mill and the disposal of tailings. A mill located at the mine and having ample room for a tailings dump saves the cost of hauling the ore to the mill and of hauling away the tailings.

(9) The specific gravity of the ore. In figuring cost per ton the specific gravity will affect the result considerably, since heavy ores are treated as rapidly by volume as light ones, and therefore more rapidly by weight.

(10) The efficiency of the general management. This is perhaps the most important of all. The management requires technical skill in order to take advantage of every scientific improvement; and business ability in order to proportion wages in all departments, according to relative efficiency and usefulness; and to discriminate in employing the right man and the proper materials in the right place, and in putting on or knocking off an employé. The management must serve as the agent of capital on the one hand, and controller of labor on the other, and prevent strife between them; at the same time maintain discipline and inculcate a spirit of loyalty and harmony throughout the whole working force.

§ 846. The costs of milling given below are taken from three sources: the author's visit to the mills, the official mine and mill reports, and from the mining periodicals. They are believed to have received the direct or indirect approval of the management in every case. The cost of mining is added in many cases. Such mills as are given by number are described in Chapter XX.

These figures on cost of milling vary for the reasons previously given, and also because the method of making up accounts varies in the mills; in some of the quotations fixed charges, such as superintendence, taxes, insurance, etc., are not included. There are also variations in including other items; some mills include the cost of assaying mill products, of shipping concentrates, of disposing of tailings, etc., while others do not. The amortization of capital as an item of cost is almost everywhere omitted. Charleton says that this should be taken as 10 or 15% of the original cost, according to the life of the works; but it is sometimes taken as only 5 or 10% on the machinery, and 2.5 to 5% on the buildings.

The cost of mining is as variable as the cost of milling. The mining depends: (1) upon the system used, including the method of laying out the mine, of actual mining, hauling, ventilation, draining and supporting the roof; (2) upon the quality of labor and the wages paid; (3) upon the kind of explosives and other supplies used and the cost of the same; (4) upon the general management; and (5) upon the amount of "dead work" or development required and its cost. This last item is one of the greatest causes of variation in the cost of mining. It varies with the geological formation and with the mining experience and judgment of the management and often even upon chance. It can be seen that this work requires a thorough knowledge of all kinds of ore deposits considered from a geological standpoint, and especially of the phenomenon and structure of faults.

The same variation occurs in keeping mining accounts as in milling, and consequently where a lump sum, without details, is given for the cost, one cannot be sure whether it covers only the bare cost of mining or includes also the cost of development, transportation to mill and fixed charges for management, etc.

The cost should include the depreciation of the mine and the redemption of capital spent on the plant.

§ 847. The average cost of milling by hand jigs in the Joplin district of Missouri (see Mill 3) is about $0.50 per ton.

Mill 10. A mill in Missouri treating 100 to 120 tons in 10 hours and separating blende and galena from a gangue of flint and limestone. The total operating expenses including mining and milling were $0.59 per ton. Five other mills similar to this in the Joplin district of Missouri gave figures for milling only, as shown in Table 391. These figures are based on actual weights of ore and include everything except general expense of management and amortization.

TABLE 391.—COSTS OF MILLING IN THE JOPLIN DISTRICT OF MISSOURI.

	Capacity per 10 Hours' Tons.	Average Cost per Ton for Several Consecutive Months.
First mill	100	$0.245, 0.19, 0.20, 0.18, 0.36
Second mill	80	$0.28, 0.26, 0.29, 0.24, 0.25, 0.32, 0.26, 0.27
Third mill	80	$0.44, 0.44, 0.37, 0.29, 0.44, 0.38, 0.29, 0.21
Fourth mill	110	$0.44, 0.50, 0.57
Fifth mill	140	$0.18, 0.24, 0.23

At the first mill the cost of $0.36 per ton was subdivided as follows: repairs on plant $0.044; labor $0.153; fuel $0.059; hard iron $0.031; light $0.009; lubricants $0.021; cleaning pond $0.001; tools $0.001; water $0.001; fire insurance $0.04; total $0.36.

Mill 15. An 80-ton concentrating mill in Missouri separating blende from a gangue of flint and dolomite. A year's work shows 33.36 tons milled per day of 10 hours and the following are the items of cost per ton.

Concentration.		Repairs.	
Labor	$0.2377	Labor	$0.0245
Fuel	0.0925	Supplies	0.0583
Supplies	0.0545		
Oil	0.0097	Total	$0.0828
Total	$0.3944	Grand total	$0.4772

These figures do not include superintendence and depreciation.

Mill 18. A 95-ton concentrating mill in Colorado treating ore containing argentiferous galena, blende, pyrite and quartz. The average cost of concentrating is about $1.00 per ton of crude ore.

Mill 20. A 175-ton concentrating mill in Utah on pyrite in a soft quartz and porphyry gangue. The cost per ton of crude ore for concentrating is $0.92.

Mill 22. A 175-ton mill in Missouri separating galena from limestone. The cost of mining varies with the amount of water to be handled and with the thickness of the ore deposit in the mine which changes the number of drills required. The following is a safe estimate for a well equipped mine in this locality handling 200 tons in 24 hours with ore averaging 10 feet thick.

		Sharpening drills, etc	$10.00
12 Drills, Driller, $1.50; Helper, 1.25	$33.00	Powder and fuse	20.00
20 Shovelers, trammers, etc	25.00	Oil and lighting	4.00
10 Trackmen, $1.35; roofmen, $1.75; shift bosses, $2.00; pumpmen, $1.50	15.00	Coal—20 tons at $2.00	40.00
2 Hoisting engineers, $1.75; 4 firemen, $1.40; 2 Landers, $1.50; helpers	14.00	Total	$161.00
		Total per ton	$0.805

This estimate does not include superintendence and such supplies as timber, etc.

Mill 24. A 100-ton mill in Missouri separating galena from limestone containing some silica. Mining costs $0.80 to $0.85 per ton of ore including hauling ore from mines to mill, hauling concentrates to smelter, hauling away the tailings and hauling fuel (wood on a tramway near by); also includes power furnished to run the machine shop and all repairs on the mill, tramways from mines and on

reservoir. Mining costs $1.25 to $1.75 per ton of ore mined. This includes all the hand sorting where from one quarter to a half of the rock is thrown out so that only a little over half goes to the mill. The cost of breaking the rock (stoping) exclusive of wheeling to the shaft and hoisting is about $0.40 to $0.45 per ton.

Mill 25.[79] A 900-ton mill in Missouri separating galena from dolomite. The cost of dressing for the year ending May 1, 1887, was $0.364 per ton made up of labor $0.134, repairs $0.100, supplies $0.035 and coal $0.095.

§ 848. A mill in northern Idaho on argentiferous galena with a gangue of quartz.

Labor Stoping.	
Foremen, bosses, blacksmiths, nippers and supply men	$0.193
Timbermen and carpenters, $3.50 per shift	0.038
Miners, $3.50 per shift	0.577
Carmen and trammers, $2.50 per shift	0.126
Shovelers and laborers, $2.50 per shift	0.484
Contract work	0.047
Repairs	0.025
Total	$1.489

Supplies Stoping.	
Explosives	$0.051
Illuminants	0.094
Lubricants	0.001
Iron and steel	0.013
Miscellaneous supplies	0.083
Timber and lagging	0.093
Power supplies	0.007
Wood	0.003
Total	$0.283
Grand total for stoping	$1.712

To get the total cost of mining, a certain amount must be added to this for development work.

Labor Concentrating.	
Foremen, blacksmiths and machinists	$0.043
Millmen, $3 per shift	0.090
Laborers, $2.50 per shift	0.010
Ore sorters, contract work	0.025
Power labor	0.004
Crusher labor	0.015
Repair labor	0.019
Total	$0.206

Supplies Concentrating.	
Lubricants	$0.005
Iron and steel	0.003
Miscellaneous supplies	0.089
Timber	0.002
Roll shells	0.011
Trommel screens	0.007
Crusher supplies	0.003
Power supplies	0.001
Wood	0.033
Stable	0.002
Total	$0.096
Grand total	$0.302

These figures do not include general expense such as superintendence, assaying, depreciation, etc.

Mill 42.[286] Copper sulphide ore with a gangue of quartz and feldspar. The mining expenses per ton for the year ending June 30, 1898, were as follows:

Assay expenses and salaries	$0.006
Candles	0.020
Coal	0.142
Electric light	0.010
Expenses	0.014
Freight on ore	0.310
Fuse and caps	0.018
Labor	2.314
Legal expenses	0.018
Mess expenses	0.008
Oil	0.012
Personal injuries	0.025
Powder	0.101
Precipitating expenses	0.004
Precipitating labor	0.013
Precipitating scrap material	$0.006
Salaries, including management	0.066
Stable expenses	0.004
Sundry supplies	0.032
Taxes	0.049
Timber	0.295
Tools and utensils	0.036
Water	0.015
Repairs { Building and structures	0.002
Repairs { Machinery and plant	0.261
Construction { Building and structures	0.058
Construction { Machinery and plant	0.105
Total	$3.238

The cost of concentrating was $0.77 per ton. Goodale[112] says that in four mills treating this class of ore at Butte, Montana, the expenses of concentrating range from $0.35 per ton in the larger plants to $1.00 in those of smaller capacity. Custom work costs higher than steady work owing to the frequent changes necessary. The cost of concentrating in Butte during ten months in 1901 and 1902 was $0.70 per ton in three mills and $0.75 in one mill.*

§ 849. Mill 45.[293] A 3-head steam stamp mill at Lake Superior on native copper amygdaloid rock. The total cost per ton for mining and milling was

* *Engineering and Mining Journal*, Vol. LXXV., (1903), p. 708.

$1.82 in 1897 and $1.60 in 1898; for stamping and concentrating, $0.54 in 1897 and $0.5102 in 1898.

Mill 46.[290]. A 6-head steam stamp mill at Lake Superior on native copper amygdaloid rock. The total expenses of this company in 1898 were $1.69 per ton of ore mined. This probably includes the cost of smelting and marketing the copper. The cost of stamping and concentrating was $0.28 per ton against $0.25 in 1897.

Mill 47.[290] A 5-head steam stamp mill at Lake Superior on native copper amygdaloid rock. The total cost per ton mined in 1898 was distributed as follows:

Mining and milling	$1.548	Smelting, transportation, etc.	$0.333
Construction	0.386		
Taxes in Michigan	0.068	Total	$2.330

The cost of stamping and concentrating was $0.2228 per ton.

Mill 48.[289] A 5-head steam stamp mill at Lake Superior on native copper conglomerate. The total cost per ton mined in 1898 including smelting and transportation was $2.29; of this the cost of mining and milling was $1.66 which includes a cost of $0.22402 for stamping and concentrating per ton milled.

Atlantic mill.[291] A 6-head steam stamp mill at Lake Superior on native copper amygdaloid. In the year 1898 the costs per ton were as follows:

Mining, selecting and breaking, and all surface expenses, including taxes	$0.8911
Transporting to mill	0.0555
Stamping and concentrating	0.2411
Working expenses at mine	$1.1877
Freight, smelting and marketing product, including New York office expenses	0.1604
Total running expenses	$1.3481
Total expense, including construction	1.5359

The rock stamped was 370,767 tons.

Wolverine mine.[294] This is a Lake Superior native copper mine which treats its ores at two mills with one steam stamp each. In the year ending June 30, 1899, 217,243 tons of rock were mined and 184,799 tons were milled. The costs per ton mined were:

Underground expenses	$0.8508	Construction	$0.0497
Rockhouse	0.0733	Smelting, freight and marketing copper	0.2892
Stamp mill	0.3120		
Surface expenses	0.0949	Total	$1.6684

The actual cost of stamping and concentrating per ton treated was $0.3668.

§ 850. Mill 54.[292] A 30-stamp vanner mill in Utah on silver ore with gangue of quartz, siderite and calcite. Report for year 1898. Ore mined, 38,889 tons, of which 4,928 tons were shipped direct and 33,961 tons were milled.

		Cost per Ton.	Cost per Ton Mined.
Mining.—Labor on ore		$1.680	$1.680
	Labor on dead work	0.404	0.404
	Labor on surface	0.615	0.615
	Supplies, timber, fuel, etc.	1.116	1.116
	Total mining	$3.815	$3.815
Milling.—Labor		0.727	0.633
	Supplies, fuel, etc.	0.369	0.322
	Total milling	$1.096	$0.955
	General expenses, taxes, etc.	0.896	0.896
	Grand total		$5.666

Mill 56. A 10-stamp gold mill in California on cement gravel. Mining and milling cost $1.00 to $1.50 per ton, average about $1.25, depending on the hardness and amount of boulders, quality of the air in the mine and the depth of gravel.

Mill 57.[39] A 40-stamp gold mill in California with gangue of quartz.

Mining.—Labor stoping	$4.42
Labor development	0.54
Supplies, timber, etc	1.33
General mine labor	0.97
Surface labor	1.21
Total per ton	$8.47

Milling for three years (1888-1890).		
Amount of ore crushed, in tons..	52,208	
Total cost		$42,263
Supplies.—Mercury, per ton	$0.034	
Shoes and dies	0.068	
Other mill castings. .	0.016	
Screens	0.010	
Sundries	0.054	
Total per ton		$0.182
Labor.—Concentrators	$0.135	
Amalgamators	0.132	
Rock breaker	0.047	
Total per ton		$0.314
Water per ton	0.310	
Grand total per ton		$0.806

Mill 59.[395] A 40-stamp gold mill in California with a gangue of quartz and slate. During six months in 1900 the ore mined was 14,784 tons, the ore milled was 14,280 tons and the total expense was $5.97 per ton. An average of 18 months gave the milling cost as $0.4924 per ton.

Mill 61. A 40-stamp gold mill in California with a gangue of quartz and slate. Mining costs $1.672 per ton while milling costs $0.444 per ton.

§ 851. Mill 64.[385] A 30-stamp mill in California with a gangue of quartz and slate. For the year ending September 30, 1896, there were 33,497 tons mined at a cost of $2.17 per ton and 33,512 tons milled at a cost of $0.408 per ton. These figures include all expenses. The operation of the rock breakers and delivery of the ore to the mill is charged to mining. The detailed account of mining and milling cost is as follows:

Mining.	Total.	Cost per Ton.	Milling.	Total.	Cost per Ton.
Timbers	$6,255.80	$0.186	Shoes	$628.80	$0.018
Spiling	2,031.55	0.061	Dies	380.60	0.011
Lumber	691.46	0.020	Screens	108.39	0.003
Charcoal	652.40	0.019	Mercury	240.71	0.007
Candles	556.90	0.016	Wood	75.37	0.002
Powder	1,661.37	0.050	Hardware, iron and steel..	435.15	0.013
Fuse	291.33	0.009	Belting	199.48	0.006
Caps	62.05	0.002	Water for power	3,186.70	0.095
Water for power	3,297.25	0.098	Freight	78.53	
Freight	528.76	0.016	Cyanide	81.00	0.006
Iron	408.15	0.012	Oil	14.85	
Steel	433.79	0.013	Grease	5.06	
Hardware	929.31	0.028	Lumber	262.83	0.008
Oil	252.01	0.008	Miscellaneous	223.53	0.007
Grease and tar	35.30	0.001	Assay supplies	152.04	0.005
Coal	77.11	0.002	Office supplies	105.20	0.003
Miscellaneous	1,894.18	0.057	Silver-plated plates	234.02	0.007
Power drill machinery	854.75	0.025	Water pipe and connection.	718.40	0.021
Pump repairs	637.60	0.019	Hauling sulphurets	702.22	0.020
Surveying	212.50	0.006	Express on bullion	185.14	0.005
Taxes	247.50	0.008	Taxes	247.50	0.008
Water pipe	59.05	0.002	Insurance	59.38	0.002
Insurance	128.77	0.004	Superintendence and labor	5,389.06	0.160
Wire rope	392.70	0.012			
Superintendence and labor..	50,068.82	1.494	Total	$13,699.96	$0.408
Total	$72,640.36	$2.168			

A summary shows that of the milling cost, $0.153 was for supplies, $0.160 for labor, and $0.095 for power.

Mills 65, 73 and 74.[114] 60, 60 and 40-stamp gold mills respectively in California with gangue of quartz and slate. The cost of milling in 1897 exclusive of power was $0.138 per ton. Water power is used and costs but little.

§ 852. Mill 66.[109 and 282] A 100-stamp gold mill in the Black Hills with a gangue of quartz and schist. The detailed cost of milling per ton for the fiscal year 1893-4* treating 104,995 tons was as follows:

Labor	$0.2543	Oil	$0.0034
Supplies	0.0105	Quicksilver	0.0087
Water	0.1986	Lumber	0.0167
Wood	0.0597	Timber	0.0125
Coal	0.1784		
Machinery	0.1097	Total	$0.8531

* At this time the mill contained only 80 stamps.

The report of the Homestake Company which includes other mills and mines besides Mill 66, for the year ending May 31, 1897, shows a total expense of $4.305 per ton divided as follows:

Milling	$1.073	Purchase of property	$0.564
Mining	2.300		
Blacksmith shop, foundry, tramway, etc	0.270	Total	$4.305
General expenses and taxes	0.098		

Mill 67. A 20-stamp gold mill in Nova Scotia with a gangue of quartz. The cost of mining on the various lodes varies from $2.00 to $8.00 per ton. The approximate cost of mining and milling when running full is:

Stoping	$1.90 per ton.	Superintendence	$0.32
Dead work (development)	0.63		
Tramming and hoisting	0.35	Total	$3.85
Milling	0.65		

This mill is run by steam power.

At the Oldham mill in Nova Scotia which is a 10-stamp custom mill and crushes 28 to 30 tons in 24 hours the cost per ton was:

Labor	$0.2730	Quicksilver	$0.0205
Supplies	0.0298		
Iron (shoes and dies)	0.0264	Total	$0.3492

The power, superintendence and depreciation are not included.

Mill 68. A 60-stamp gold mill in Montana with a gangue of quartz, slate, granite and calcite. The cost of milling is $1.15 per ton. See Mill 82.

Mill 69.[278] A 30-stamp gold mill in Idaho with a gangue of quartz and slate. The cost of mining and hauling by wagon one mile to the mill is $3.00 per ton. The cost of stamping and concentrating in 24 hours is:

Labor.		Supplies.	
1 Crusherman	$3.00	Castings, lumber, etc	$10.00
2 Amalgamators	7.00	Oil	1.00
2 Vannermen	6.00	Screens ($0.02 per ton)	2.00
1 Wheeler	3.00	Quicksilver, belts, tacks, etc	0.50
½ Oiler, etc	1.50		
½ Machinist	1.34	Total daily supplies	$13.50
½ Carpenter	2.00	Total labor	27.50
½ Night watchman	1.00		
½ Foreman	1.66	Grand total	$41.00
½ Assayer	1.00		
Total labor	$27.50		

As the mill treats 100 tons in 24 hours this makes the cost per ton to be $0.41, but this does not include cost of power, superintendence and depreciation.

Mill 72. A 40-stamp gold mill in California with a gangue of quartz and slate. Mining costs about $1.75 per ton and milling about $0.50. The ore body is from 3 to 64 feet wide.

Mill 77.[39] A 75-stamp gold mill in Gilpin County, Colorado, with a gangue of quartz and decomposed feldspar. The cost of milling in 1890 was $0.84 per ton but in 1891 it decreased to $0.78. Of this, $0.38 was for labor.

§ 853. Gold Coins Mines Company,[351] in Gilpin County, Colorado, mined 20,724 tons in 1896 at a cost of $6.20 per ton made up of $2.47 for breaking ore and tramming, $0.67 for hoisting, $1.14 for prospecting and dead work and $1.92 for general expenses. Of this, 5,358 tons were milled at Mill 77 at a cost of $2.42 per ton and 13,916 were milled at the Kansas mill at a cost of $1.47 per ton. In the latter mill the details were: labor $0.62 per ton, supplies, fuel and water $0.55 and hauling $0.30.

Alaska Treadwell Mill.[295] A 240-stamp gold mill on Douglas Island, Alaska, with a gangue of granite. For the year ending May 31, 1899, the total expense for 250,408 tons was:

Mining	$0.7732 per ton.	Office expenses, Paris	$0.0009 per ton
Milling and concentrating	0.2776 "	Legal expenses, San Francisco	0.0028 "
Chlorinating of 3,197 tons of sulphurets	0.0676 "	Consulting engineer, expenses	0.0066 "
Sulphuret expenses, 1,716 tons	0.0610 "	Bullion charges	0.0260 "
General expenses, Douglas Island	0.0884 "		
Office expenses, San Francisco	0.0244 "	Total	$1.2880 "
Office expenses, London	0.0045 "		

Hammond[178] gives the following figures as average for a 40-stamp gold mill using water power.

Mill labor	$0.205 per ton.	Lubricants, screens, illuminants, machinist, incidentals	$0.04 to 0.08
Assaying, retorting, superintendent.(a)	0.025 "		
Castings	0.07 to 0.10		
Quicksilver	0.015 to 0.04	Total	$0.355 to 0.45

(a) Superintendent gets $120 per month, and one-half is charged to mill and one-half to mine.

To this add cost of water power. If steam power is used add about $0.10 per ton for labor and $0.01 for repairs, lubricants, etc.

In the cases of three representative gold stamp mills in Amador County, California,[89] working profitably with mills of 20, 40 and 30 stamps respectively, the total costs including mining and everything were $2.35 to $3.45, $3.50 to $3.75 and $3.10 to $3.25 per ton of ore.

Olcott[99] gives the cost of milling in several California stamp mills as varying from $0.20 to $0.75 per ton and in a Gilpin County, Colorado, stamp mill as $0.95 per ton.

§ 854. Mill 82. A 50-stamp combination silver mill in Montana with a gangue of quartz, slate, granite and calcite. The cost of milling is $3.00 per ton. Mills 68 and 82 are together and the total expenses per ton for both for different periods of six months are as follows:

	Six Months Ending.				
	June 30, 1894.	Dec. 31, 1894.	June 30, 1895.	Dec. 31, 1898.	June 30, 1899.
Total tons treated	34,613	38,010	27,230	40,130	37,692
Working expenses, including insurance, taxes, etc.	$7.74	$7.44	$9.99	$5.78	$5.89
Permanent improvements	0.11	0.07	0.94	0.56	?
London charges and sundries	0.29	0.88	0.36	0.29	?
Total	$8.14	$7.89	$11.29	$6.63	?

Mill 84.[351] A 40-stamp combination silver mill in Utah with a gangue of barite, quartz and calcite. In the year 1896, the mill treated 38,500 tons of ore at a cost of $1.01 per ton; mining, transportation and other expense came to $4.92 per ton. An estimate of the cost of mining a vein 4 feet wide is from $2.00 to $6.00 per ton varying with the dip and the hardness of the vein.

§ 855. De La Mar mill.[351] A wet-stamping, pan-amalgamation silver mill in Idaho. The tons mined in 1897 were 40,569, of which 40,453 tons were milled and 116 tons sold direct to smelters. The cost of mining was $5.30 per ton to which $0.59 per ton has to be added as the cost of mining and marketing the ore sold to smelters. The cost of milling was $4.94 per ton of which $1.67 was for labor, $2.82 for chemicals and general supplies, and the remainder for insurance, bullion charges, etc.

New Elkhorn mill.[351] A dry-stamping, chloridizing-roasting and pan-amalgamation mill in Montana. The cost of mining 13,830 tons in 1896 was $12.39 per ton and of milling 13,762 tons $7.17 or a total of $19.56 per ton.

Ontario mill.[351] A dry-stamping, chloridizing-roasting and pan-amalgamation silver mill in Utah. The costs for 1896 were:

	Tons.	Per Ton.		Tons.	Per Ton.
Mining	28,912	$8.37	Milling	30,270	6.16
Prospecting	28,912	4.38	Bullion expense	30,270	1.09
Sundries	28,912	1.16			
Hauling	28,380	0.44	Total		$21.51

Alice Mill.[351] A dry-stamping, chloridizing-roasting and pan-amalgamation silver mill in Montana. In the year 1897 the cost of milling 25,702 tons was $6.11 per ton and of mining $4.15.

§ 856. Hibernia mill. This mill, located in New Jersey, takes magnetite and a granitic gangue, mined in an open cut, and treats it in a magnetic concentrating plant at the rate of 200 tons in 10 hours. Mining costs $0.50 per ton, milling $0.50, and all other expense of management, etc., $0.25 making a total of $1.25 per ton.

The Michigamme iron mine,[85] Michigan, concentrated 180 to 200 tons of magnetic ore daily (probably ten hour day) at a cost of $0.18 per ton including crushing, hoisting into mill bins, separating by magnets and loading into cars.

The Tilly Foster mine[86] in New York treating magnetic iron ore from an old dump at the rate of about 140 tons per day (probably ten hours) showed by its monthly reports from February to July inclusive, 1890, that the total cost varied from $0.700 to $0.915 per ton of ore, average $0.778. This included digging from the old dump, breaking, hauling by train to the mill, stamping and separating by magnets. The cost of the ore delivered to the mill varied from $0.059 to $0.097 per ton leaving the cost of actual milling to vary from $0.632 to $0.818 per ton of ore.

Mill 91 was designed with the idea of treating magnetic ore on a very large scale and thereby reducing the cost. It has been estimated that the mining and milling can be done for considerably less than $0.10 each per ton but as the plant has not yet passed beyond the experimental stage the accuracy of these estimates has not been demonstrated.

Mill 92. A combination magnetic mill in New Jersey treating 200 tons in 24 hours separating out franklinite by magnetic separators and willemite and zincite by jigging:

Crushing house labor, including loading into storage bins, hoisting into house, crushing, drying and hand picking	$0.1175
Separating house labor, including jig runners, jig helpers and drying concentrates	0.1477
General labor, including foremen, fireman, chemist, repair men, engineers and electricians, loaders and shippers	0.2683
Total for labor	$0.5335
Coal	0.0677
Material for general supplies and repairs, wire cloth, oil and grease, repairs to machinery	0.1245
Total per ton of 2,240 pounds of crude ore	$0.7457

In the new mill of this company the cost has been reduced to $0.40 per ton.

Hoffman[94] gives the cost of mining, crushing, roasting, preparing and separating one ton of magnetic concentrates from 2½ tons of ore at the Croton mines, New York, as $1.95.

Clemens Jones[89] estimated from tests that the total cost of one ton of magnetic concentrates from 1½ tons of hematite ore would be $2.88, of which $0.63 was for roasting and concentrating.

Chase's estimate[106] of the cost of cobbing, crushing, washing, crushing and separating one ton of magnetite from Cranberry ore in North Carolina was $0.25.

Phillips' estimate[263] of the total cost of one ton of magnetic concentrates from Cranberry ore was $6.80. His estimate[105] for the total cost of mining, roasting, and concentrating magnetically three tons of Alabama hematite into one ton of concentrates was $1.15.

§ 857. Three German mills, treating complex lead and zinc ores, are given for comparison, viz.: the Himmelfahrt mill at Freiberg, the Silberau mill at Ems and the Gute Hoffnung mill at St. Goar am Rhein. All these mills use the German continuous system of concentrating with hand picking and cobbing, close sizing, graded jigging, etc., and employ a large number of men, (see § 814).

The Himmelfahrt mill treats 150 to 200 tons in ten hours, is run by steam power and the cost is 8 pfennig per 100 kilos or $0.173 per ton, exclusive of rough sorting and hand picking. As illustrative of the great reduction in costs made by this mill it is interesting to note that the cost of dressing in the old

Himmelfahrt mill about 1890 was 96.4 pfennig per 100 kilos or $2.082 per ton. This was distributed as follows: sorting, separating and cobbing, $0.432 per ton; cleaning followed by cobbing and jigging, $0.302; crushing by rolls and jigging, $0.104; stamping and concentrating on tables, $0.380; transportation, testing, etc., $0.864; total, $2.082.

The Silberau mill treats 200 tons in 10 hours using both steam and water power. In one month 3,043 tons were treated at a cost of 27 pfennig per 100 kilos ($0.583 per ton) including repairs and general costs, or 21 pfennig per 100 kilos ($0.453 per ton) without these. The distribution of cost about 1890 was as follows: separating and sorting, $0.058 per ton; clean picking, $0.181; dressing mine fines, $0.348; dressing blende and lead ores, $0.151; total, 34.2 pfennig per 100 kilos or $0.738 per ton.

The Gute Hoffnung mill treats 50 to 60 tons in 10 hours at a cost of about 20 pfennig per 100 kilos or $0.432 per ton.

The mill at Monteponi, Sardinia, (see § 779), treating zinc and lead ores at the rate of 250 tons daily, costs $0.428 per ton. This includes the transport and treatment of the ore and the maintenance of material of the regular plant but does not include any of the costs of the magnetic treatment.

TESTING.

§ 858. The choice of a method for treating any ore is very important, for on it will largely depend the question of profit. It is not wise simply to model a mill on a plant which is successfully handling a similar ore; though apparently similar, the two may have characteristics that require quite different methods of treatment. The engineer should make careful examination and tests of the ore, for which various suggestions are given in the following pages. For this purpose he must obtain carefully taken samples from all parts of the mine; and should insist on a reasonable amount of development work before planning a mill. In some mills, only a small part of the value is recovered, in others the cost is excessive, because the methods employed were not intelligently planned. There are also a great many idle mills in which large amounts of capital have been uselessly invested because ordinary precautions were not taken to determine the value of the property or to find the right method of treating the ore. Success depends upon the susceptibility of the ore to treatment and upon the ore dresser's ability to make a wise selection of a process. At Falun, Sweden, a concentration plant extracted only about 75% on a copper ore and was converted into a lixiviation plant. The early Montana copper sulphide mills and the mill at Broken Hill, New South Wales, were designed by men who had served their apprenticeship at Lake Superior, and contained steam stamps, Collom jigs, etc. After running some time it was found that graded crushing by breakers and rolls would give much better results and so the mills have all been changed over. See also comments at end of § 760.

If it is decided to build a mill while the mine is in the preliminary stages, the sensible course is to erect only a small plant to treat the ore until the nature and value of the deposit is clearly proved. Another scheme in such a case is to build a mill so arranged that the ore may be tested out in different ways.

In treating this subject of testing, tools and a general discussion of methods are first taken up; then follows a number of systematic schemes to find the best treatment for a new ore; and finally is considered the testing of mills in operation, both to control the daily work of the machines and to decide what changes in the process may be desirable. For ores that are not suited to mechanical concentration a number of metallurgical tests are outlined in § 894 and § 895.

TOOLS AND GENERAL METHODS OF TESTING.

§ 859.—CRUSHERS.—For crushing small quantities of ore for examination, the hand mortar and screen are invaluable. The mortar may give greater or smaller proportion of fines according to how it is used: if the undersize is sifted out at short intervals during the crushing, the production of fines will be diminished. A little jaw breaker worked by a hand lever, crushing from two inches to one quarter inch, made by Taylor of San Francisco, is convenient for lots of a pound or two. The laboratory size of the Sturtevant roll jaw breaker, (see § 40), made by the Sturtevant Mill Company of Boston, is very serviceable for crushing lots of from 10 to 30 pounds to ¼ inch in diameter. A little Blake breaker and a pair of crushing rolls, as made by the Allis-Chalmers Company of Chicago, will speedily bring 100 pounds or more to any desired size, and makes the most serviceable plant for this class of work. The sample grinder (see § 222) and the bucking board, which is a horizontal iron plate on which the ore is ground by hand by a heavy iron muller, are satisfactory only where extreme fineness is sought, as they tend to make a larger proportion of fines.

Thayer's small portable one-stamp mill[296], made by John Taylor & Company, San Francisco, may be useful to indicate whether an ore will probably give good results by stamping and amalgamation. The mortar of this mill is circular in horizontal section, and has an inside diameter of 8 inches. The stamp, with tappet and shoe attached, weighs 45 pounds, and has a drop of 6½ to 7 inches. The shoe and die, of chilled iron, are 4 inches in diameter. The discharge opening is 6×6 inches. The stamp can be run by either hand or power.

A battery of stamps, weighing 225 pounds each, has proved very satisfactory at the Massachusetts Institute of Technology for making small mill tests on 1,000 to 2,000 pounds of gold ore. Other school and testing laboratories have 500-pound stamps. These are suitable for testing batches of one or more tons of gold ore.

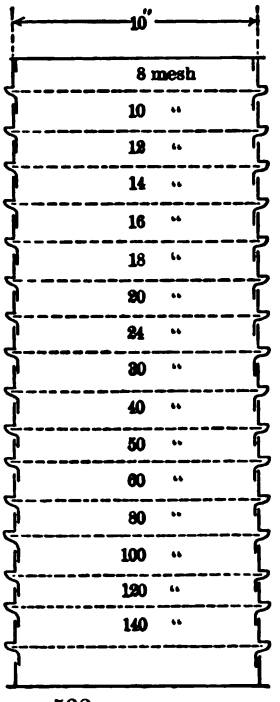

FIG. 532.—NEST OF TESTING SCREENS.

§ 860. SCREENS.—Circular hand screens serve very well for ordinary testing work. A nest of hand screens with a pan at the bottom (see Fig. 532) is very convenient. It allows a sieve scale with large or small intervals to be chosen at will, and the bulk of the sifting to be done at one time. For treating considerable quantities of ore, it is convenient to have a horizontal screen 1 foot wide, 3 feet long, driven by an eccentric with a 2-inch throw, capable of variation, and suspended by rods so as to have an upward, forward motion on the forward stroke, and a downward, backward motion on the return stroke, thus causing the oversize to travel rapidly off the screen. A whole set of different sizes of screens may be kept on hand and the design adapted to mounting one or more of them at a time.

The choice between round holes punched in plate and square holes in wire cloth is affected by several considerations. There can be no doubt that round holes give the most satisfactory measure as well as the most perfect limit of size of grain, namely the diameter of the circle, while square holes are not really

square, but may be oblong or trapezoidal, complicating the measure if exact work is desired. On the other hand round holes cannot be punched smaller than 0.5 mm. in diameter and if finer sizes are needed in the sieve scale, fine screens with square holes have to be used with all the attendant difficulties of mating square holes to round holes in a series of screens. The author is inclined to prefer round holes for the whole set of test screens where very fine sizes are not needed, and square holes for the whole set where very fine sizes are needed. If only one set of screens is to be used it should be of square holes.

Owing to the above mentioned disadvantages in the use of square hole screens of wire cloth Snyder[178] advocates the use of a special micrometer gauge which differs from the ordinary form used for wire, plate, etc., in that the calipering points are tipped with discs 1 cm. in diameter. The grains to be measured are put on the lower disc and the upper disc screwed down until it is in contact with the grains. The distance apart of the discs is the diameter of the maximum grains.

§ 861. Rittinger's sieve scale, which ranges up and down from 1 mm. by doubling or halving the area of successive holes, is a very satisfactory scale for ordinary commercial or mill tests. Table 392 shows the set of screens used

TABLE 392.—DIAMETERS OF HOLES OF TESTING SCREENS. (*a*)

Rittinger Scale.	Sizes Actually Obtained.	Kind of Apparatus.	Rittinger Scale.	Sizes Actually Obtained.	Kind of Apparatus.
Mm.	Mm.		Mm.	Mm.	
64.0	63.5	(*b*) Round holes.	0.707	0.667	(*b*) Round holes.
45.3	44.3	" "	0.500	0.493	" "
32.0	31.9	" "	0.354	0.371	(*b*) Square holes in brass cloth.
22.6	22.3	" "	0.250	0.270	" " " "
16.0	16.0	" "	0.177	0.158	" " " "
11.3	11.2	" "	0.125	0.119	" " " "
8.00	8.02	" "	0.088	0.078	" " " "
5.66	5.61	" "	0.063	0.069	(*b*) Square holes in silk bolting cloth.
4.00	3.94	" "	0.044	0.047	(*c*) Smallest quartz settled in water in 15 seconds.
2.83	2.69	" "	0.031	0.034	(*c*) " " settled in water in 30 seconds.
2.00	1.99	" "	0.022	0.025	(*c*) " " settled in water in 60 seconds.
1.41	1.49	" "	0.016	0.019	(*c*) " " settled in water in 120 seconds.
1.00	0.945	" "	0.011	0.012	(*c*) " " settled in water in 300 seconds.

(*a*) See footnote in § 866. (*b*) The screen holes were actually measured, a microscope being used for the finest. (*c*) The method of determining these sizes is explained in § 868.

in the tests which are discussed in § 293, § 352, and § 863. It will be seen that the sizes actually obtained are very close to the theoretical Rittinger scale. It would have been better, in some of the tests, to have had a set with still less variation between successive sizes. In the following set the ratio between successive diameters is 1.189 ($= \sqrt[4]{2}$) instead of Rittinger's 1.414 ($= \sqrt{2}$): 64.0, 53.8, 45.3, 38.1, 32.0, 26.9, 22.6, 19.0, 16.0, 13.5, 11.3, 9.51, 8.00, 6.73, 5.66, 4.76, 4.00, 3.36, 2.83, 2.38, 2.00, 1.68, 1.41, 1.19, 1.00, 0.841, 0.707, 0.595, 0.500, 0.420, 0.354, 0.297, 0.250, 0.210, 0.177, 0.149, 0.125 mm. Such a set as this is desirable for exact scientific work. The W. S. Tyler Company can supply square hole screens very close to these sizes (see Table 198); and the Allis-Chalmers Company can do the same for round holes in sizes not finer than 0.5 mm.

§ 862. *Act of Screening.* The sifting may be roughly done by placing the ore in the upper screen of a nest arranged as in Fig. 532, and shaking the whole nest together; but before each screen is taken out of the nest it should be shaken for a definite time in order to make the last of the fine grains pass through. One minute may be long enough for this final shaking for the coarser sizes, and five minutes may do for the finer sizes. Too much shaking may somewhat increase the percentage of fines by breaking off the thin edges of the grains. Too much ore should not be put on a screen at one time, because crowding hinders the work.

Wet Screening.—Ordinary dry screening is hindered because the grains that

have about the same diameter as the holes become wedged in the latter; and also because the fines cling somewhat to the coarse portion. The difficulty is lessened by screening under water. Mr. Henry A. Vezin of Denver, Colorado, has found such a decided difference in the two methods that his screening tests are always made wet. The method consists in holding a nest of about three circular screens in a pail of water and giving them a forward and backward rotary motion about their vertical center. By first screening dry and finishing wet, one can avoid the necessity of drying most of the finest product. Mr. Vezin has supplied the data in Table 393. The ore was composed of some pyrite and blende in a very hard gangue, and the dry screening was carefully done.

TABLE 393.—DRY VERSUS WET SCREENING FOR TESTING PURPOSES.

Diameters.	Quantities Obtained by		Diameters.	Quantities Obtained by	
	Dry Screening.	Wet Screening.		Dry Screening.	Wet Screening.
	%	%		%	%
Through 4.0 on 2.8 mm....	15.2	11.0	Through 0.61 on 0.25 mm...	.....	10.3
" 2.8 on 2.0 mm....	28.5	29.5	" 0.25 on 0.12 mm...	.....	5.5
" 2.0 on 1.4 mm....	.....	9.9	" 0.12 mm.	.....	16.6
" 1.4 on 1.0 mm....	.....	8.8			
" 1.0 on 0.61 mm....	.....	8.4			100.0

A test showed that a quarter of the material that rested on the 1.4-mm. screen after wet screening came from what remained above the 2-mm. screen in dry screening. In another case where 28.5% of the ore passed through a 0.43-mm. screen by dry screening, 9.4% more passed through this screen by returning the ore to the different screens and continuing the work wet.

§ 863. *Graphical Representation of Sizing Tests.*—A graphical method of representing sizing tests should, to be of value, show the relative quantities of ore between any two screens more clearly than is done by the tabulated figures. It should also enable one to find the quantities between any two sizes other than those represented by the testing screens.

The arithmetical difference between the largest and the smallest grains fed to any concentrating machine is small for the fine portion of an ore; but for

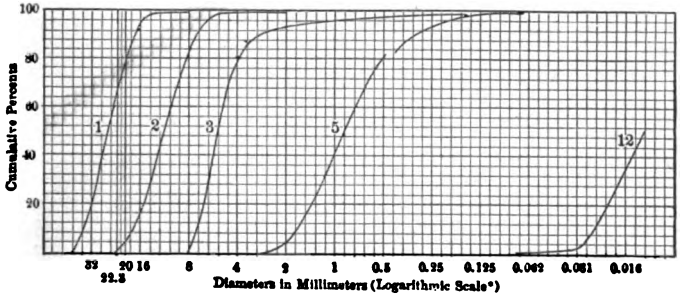

FIG. 533.—CUMULATIVE LOGARITHMIC PLOT OF SIZING TEST.

the coarse portion of the same ore the arithmetical difference is comparatively large. The *ratio* of the largest grain to the smallest, however, is approximately the same for both the fine and the coarse material. For example, if the ratio was 1½ on the fine jigs in a mill, it would be about the same on the coarse jigs. Hence it is very useful to have a method for plotting in which equal distances on the plot represent equal ratios of diameter; in other words to represent the diameters on a geometrical scale. This is done in Fig. 533, which represents sam-

* The scale has been so chosen that the logarithm of any diameter must be multiplied by 16.61 to get the number of spaces in the plot.

ples 1, 2, 3, 5, and 12 from Tables 211 and 256. In this figure, the distances on the horizontal scale are proportioned to the logarithms of the diameters. Quantities are represented by indicating, on the vertical scale, the amounts of ore (expressed in per cents.) larger than the corresponding diameter on the horizontal scale. For example, we can read off that 95% of sample No. 1 is

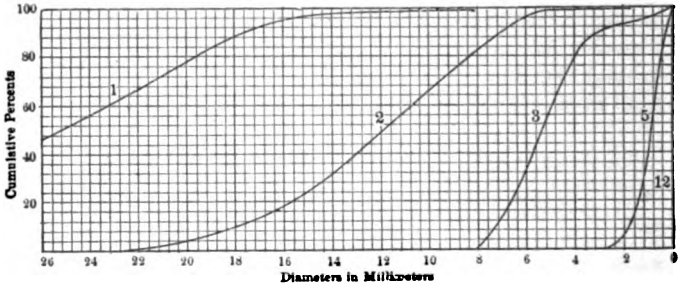

FIG. 534.—CUMULATIVE DIRECT PLOT OF SIZING TEST.

larger than 16 mm. This idea is expressed in Tables 208-211 and 253-256 by the columns headed "Cumulative per cent." This form of plot may be called a *cumulative logarithmic plot.*

§ 864. Fig. 534 shows the same data, but in this case the horizontal distances are directly proportional to the diameters; that is, the scale of diameters is arithmetical instead of geometrical. This may be called a ***cumulative direct plot.*** It will be noticed that, by this method, curve No. 1 stretches out so far

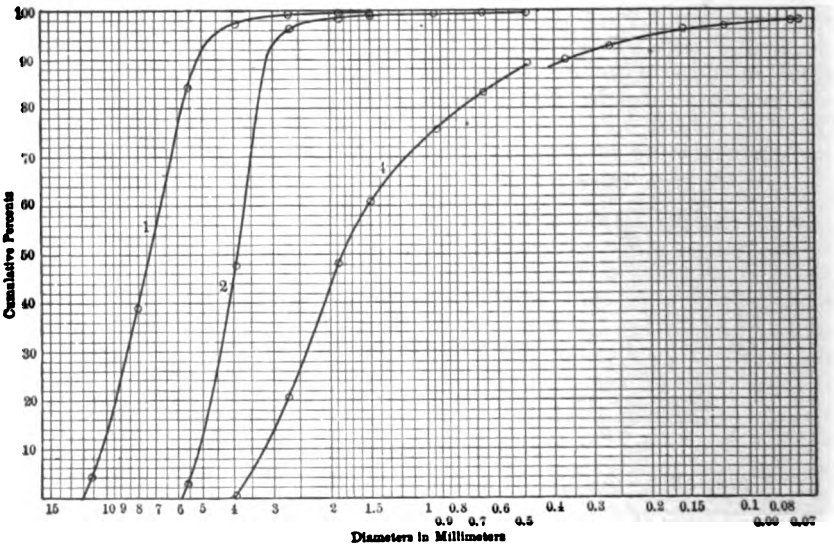

FIG. 535.—SIZING TEST OF TROMMEL PRODUCTS FROM MILL 22 (SEE TABLE 208).

that the sizes coarser than 26 mm. cannot be shown except by considerably increasing the size of the plot; while curve No. 12 is so compressed that we cannot read the different sizes at all. To overcome this difficulty, a separate scale of diameters would have to be used for each curve. The need of this, however, is avoided when using the logarithmic scale of Fig. 533, which automatically compresses curve No. 1, and expands curve No. 12. The logarithmic

method also represents much better to the eye the relative quality of work done by the various machines from which the samples were taken. It is therefore most useful for the careful study of a series of mill products, and is used in Figs. 535 to 542 to represent the trommel and classifier products from Mills

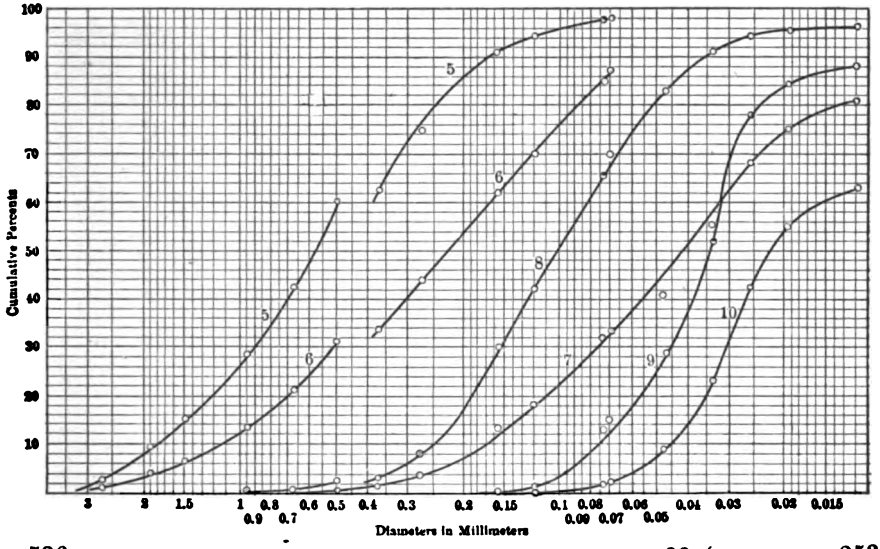

FIG. 536.—SIZING TEST OF CLASSIFIER PRODUCTS FROM MILL 22 (SEE TABLE 253).

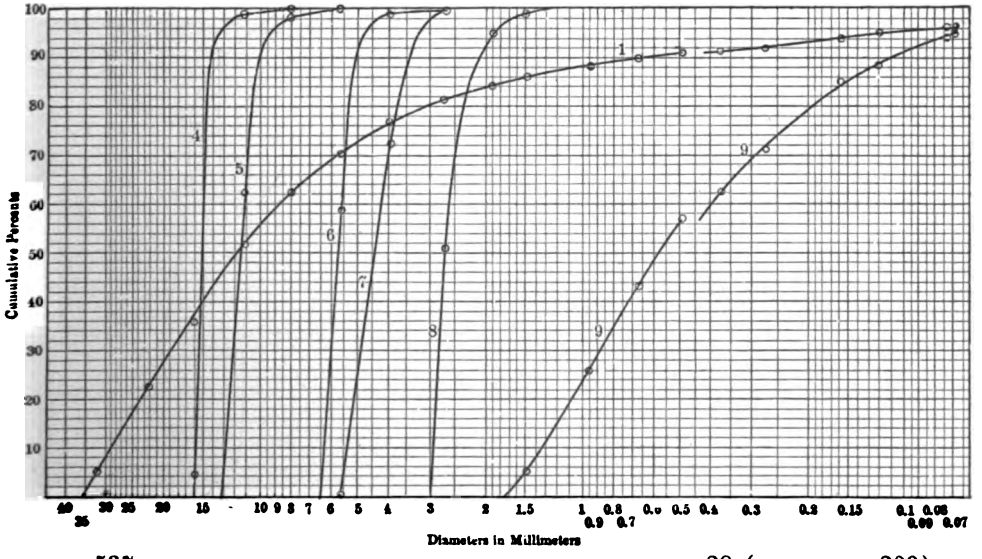

FIG. 537.—SIZING TEST OF TROMMEL PRODUCTS FROM MILL 28 (SEE TABLE 209).

22, 28, 30 and 38 which are discussed in § 293 and § 352. When the object is simply to determine, by interpolation, the exact quantity between any two sizes in a sample, it may be better to use the arithmetical method of Fig. 534 with suitable scales, than the geometrical method of Fig. 533, because it avoids the inconvenience of having to use logarithms.

§ 865. Fig. 543 shows a method of plotting the same data as in Figs. 533 and 534 in which the percentage of ore that rests on each of the testing screens is plotted independently being taken from Tables 211 and 256. It may be called an *ordinary direct plot.* While this method is all right for some kinds of data, it is misleading when used to represent sizing tests: for example, curve

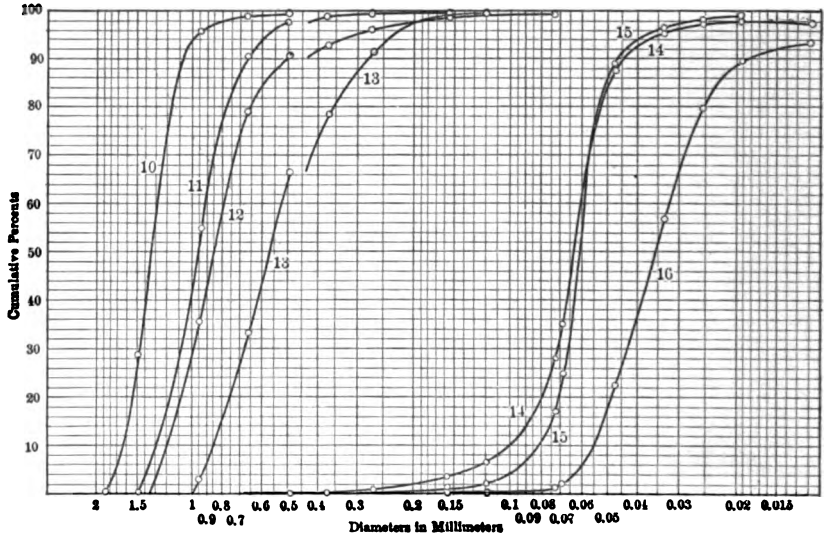

FIG. 538.—SIZING TEST OF CLASSIFIER PRODUCTS FROM MILL 28 (SEE TABLE 254).

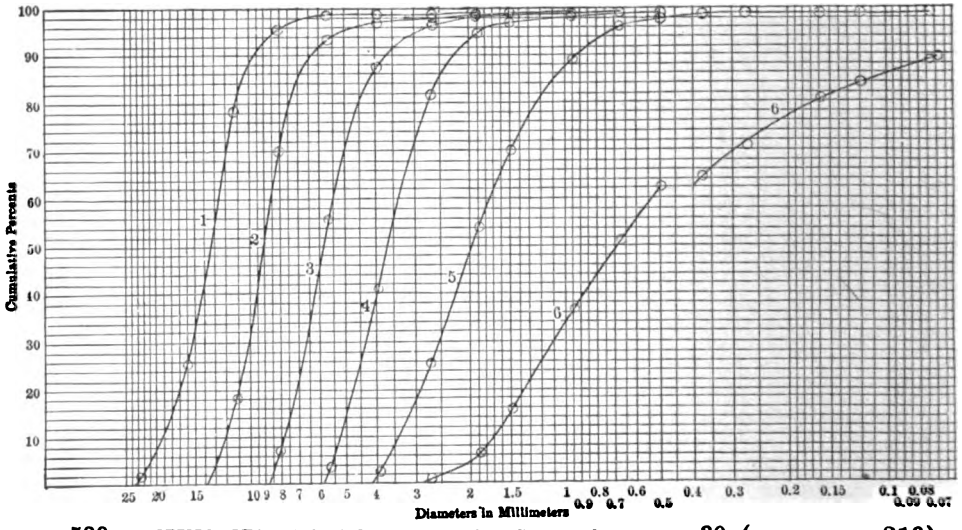

FIG. 539.—SIZING TEST OF TROMMEL PRODUCTS FROM MILL 30 (SEE TABLE 210).

No. 1 might be supposed to indicate that if a 20-mm. screen had followed the 22.3-mm. screen it would have retained 37% of the ore; but that is absurd, for the 16-mm. screen retained only 29.4%, and the 20-mm. screen would, of course, fail to retain certain sizes that were caught by the 16-mm. screen. Each of the other forms of plot, Fig. 533 and Fig. 534, indicate that a 20-mm. screen would have retained only 12.5% of the ore.

§ 866. It will be noticed on Figs. 535 to 542 that for every sample that contained material between 0.493 and 0.371 mm. there is a break in the curve at that point. To explain this, attention is drawn to the fact that the 0.493 mm. and all coarser screens have round holes, while the 0.371 mm. and all finer screens

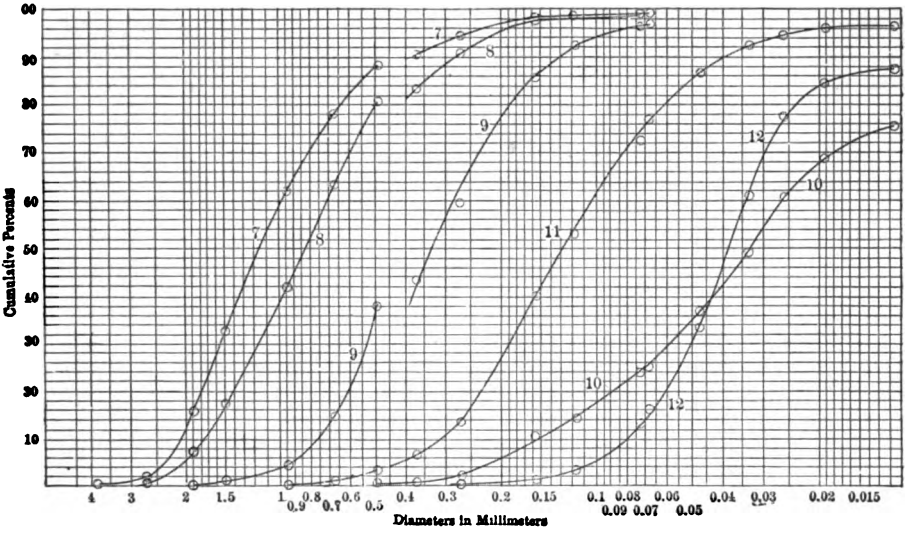

FIG. 540.—SIZING TEST OF CLASSIFIER PRODUCTS FROM MILL 30 (SEE TABLE 255).

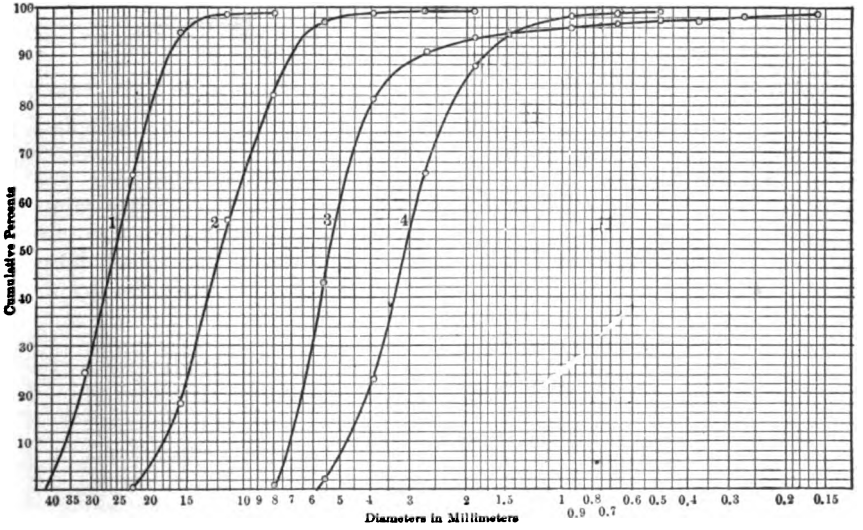

FIG. 541.—SIZING TEST OF TROMMEL PRODUCTS FROM MILL 38 (SEE TABLE 211).

have square holes.* A round hole screen will retain finer material, and therefore more material, than a square hole screen of the same nominal size. Consequently if the fine screens could have been obtained with round holes, the upper portion of each curve would have such a position that it could join the lower

* It was desirable to use round hole screens in the tests as far as possible, because all of the mills that supplied samples used round hole trommels. Square holes were used for the fine test screens, because round hole screens could not be obtained finer than 0.493 mm.

portion without any change of direction. As it is, however, the two portions can be joined only by making a sudden change in direction, which would give a false impression in regard to the distribution of sizes.

§ 867. CLASSIFIERS.—For small tests and when it is desired to watch the inside of the classifier, the tubular classifier made of glass and described in § 357 is useful. As glass is easily broken, however, a similar one made of metal as shown in Fig. 544, is usually better. The sorting column *c d* is an iron pipe; the feed hopper *a* is of galvanized iron with a connecting pipe *b;* water

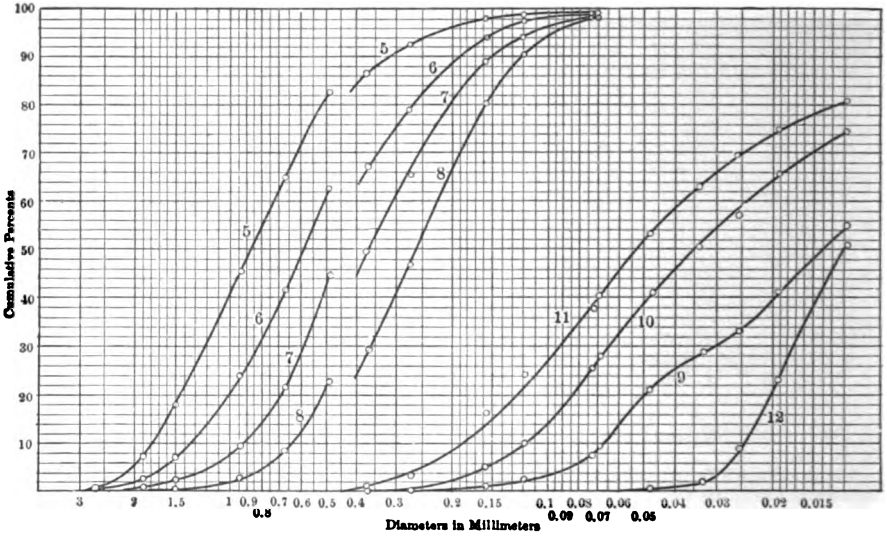

FIG. 542.—SIZING TEST OF CLASSIFIER PRODUCTS FROM MILL 38 (SEE TABLE 256).

is introduced through the vortex *e,* which is described in § 308; the spigot product passes through a piece of hose *f* into the bottle *g;* and the overflow, discharged at *h,* passes through the hose *i* and is caught in a bucket. For treating small quantities, a 1-inch pipe is large enough for the sorting column *c d.* but for larger quantities a 1½ or 2-inch pipe is better. For very slow currents a 3-inch pipe is desirable, because it is easier to gauge the comparatively large quantity of water required by this than the small quantity required by a 1-inch pipe for the same velocity of current.

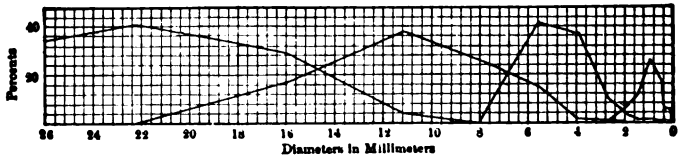

FIG. 543.—ORDINARY DIRECT PLOT OF SIZING TEST.

For larger quantities of material than can be conveniently treated in the classifier shown in Fig. 544 that shown in Figs. 545*a* and 545*b* serves well. It is called a two-current classifier because there are two currents, the one bringing the feed and the one that rises in the sorting column, in distinction from the one-current classifier (Fig. 544), in which the feed is introduced without being carried in a stream of water. In Figs. 545*a* and 545*b* the ore is placed in the galvanized iron trough *a,* from which it is carried into the pocket *b* by a small stream of water. The baffle plate *c* forces the ore into the bottom

part of the pocket, where it is subjected to the action of the rising current, and thus prevents any grains, which should go to the spigot, from being carried directly into the overflow. The spigot product may discharge into a closed bottle, as in Fig. 544, or an open spigot *f* may be used. On account of the water that discharges from the latter, it is not as easy to calculate the quantity of hydraulic water entering at *e* to produce a given current in *d*. The overflow discharges at *g*.

The velocities of currents necessary to lift different sizes of grains of different minerals have been given in § 356 and § 357; and the quantities of water required to produce various currents in several sizes of sorting column are given in Table 227.

If a sample of ore is to be divided into several products by hydraulic clas-

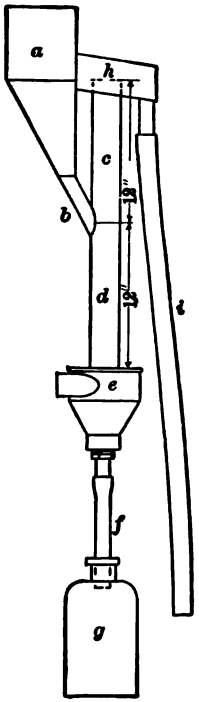

FIG. 544.—ONE-CURRENT CLASSIFIER MADE OF METAL.

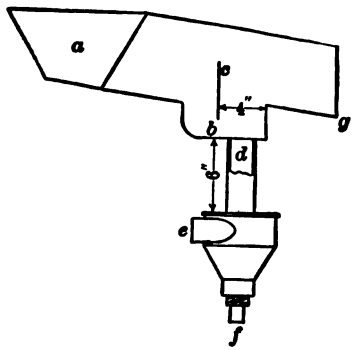

FIG. 545*a*.—ELEVATION OF TWO-CURRENT CLASSIFIER, PARTLY IN SECTION.

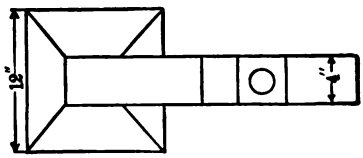

FIG. 545*b*.—PLAN.

sification, it will first be passed through the classifier run with the slowest current; and then the spigot product will be run with a stronger current; and this continued till a current is reached which carries the heaviest grains into the overflow. Each of the overflow products is, of course, caught by itself. If desired, a classifier may be made with several pockets, as in Figs. 244*a* and 244*b*. The finest product will be obtained in the final overflow, the coarsest at the first spigot, and the intermediate products at the other spigots.

In making a series of classified products it is well to have a fixed ratio between the successive sorting currents. The ratio of the Rittinger sieve scale (1.414) will be convenient in some cases. On one occasion the author wanted a series of fifteen currents ranging from 12.5 to 400 mm. per second. Let-

ting x represent the ratio between successive currents, $12.5x^{(15-1)}=400$, or $x^{14}=32$, and $x=1.28091$. Using this ratio gives the currents as follows: 12.5, 16.0, 20.5, 26.3, 33.6, 43.1, 55.2, 70.7, 90.6, 116.0, 148.6, 190.3, 243.8, 312.3 and 400 mm. per second.

For such work as separating scrap platinum wire from the glass and plaster of incandescent electric lamps, after pounding in a mortar, A. E. Foote of Philadelphia found the inclined tube shown in Fig. 546 more satisfactory than the vertical tube of Fig. 544. The logic of this appears to be that the current of water flows more freely on the upper side, *a*, of the tube than on the under side *b*. The specifically heavy platinum falls to the under side where it is but little affected by the water current, and discharges into the bottle *c*; while the glass and plaster are carried up by the current and discharged at *d*.

§ 868. *Settling Beakers or Jars.*—The forms of apparatus just described are unsatisfactory when very slow currents (less than 10 mm. per second) are used. A better method in such cases is to allow the pulp to quietly settle through a fixed depth of water in a beaker or jar for a certain number of seconds. In the tests described in § 293 and § 352, a beaker 70 mm. in diameter and 110 mm. deep was filled with distilled water to a depth of 90 mm.; and 5 grams of ore which had passed through a screen with 0.069-mm. square holes was thoroughly stirred in. After standing quietly for 300 seconds, the water was quickly but carefully poured off without disturbing the ore that had settled on the bottom. The beaker was again filled to the 90-mm. mark, and the process repeated. This was continued till the decanted water was clear. What remained in the beaker was similarly treated for periods of 120, 60, 30 and 15 seconds in succession. Each overflow product was allowed to settle, the clear water siphoned off, and the ore dried and weighed, except the finest product, which was determined by difference. It was found that in order to make duplicate tests agree, each period of settling (300 seconds, 120 seconds, etc.) should be repeated the same number of times in the separate tests; and that it is not safe to simply repeat the settling until the water is clear. Five repeated settlings seem to give good results, and do not take an unreasonable amount of time.

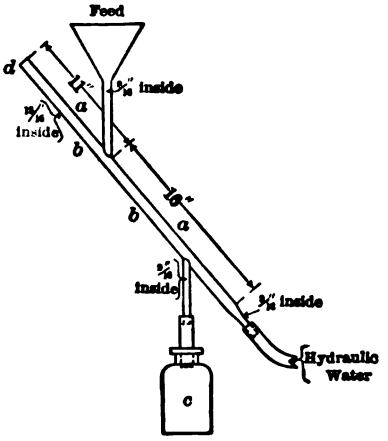

FIG. 546.—INCLINED ONE-CURRENT CLASSIFIER.

These tests served for the work given in § 293 and § 352, as an indirect method of determining the per cents. of various sizes of ore finer than the finest screen of Table 392. With this in view, the diameter of the smallest particles in each settled product was determined as follows: A sample was placed under a microscope with a micrometer measuring attachment and the length and width of the smallest particle in the field of the microscope were measured. This was done with 20 or more separate fields for each sample, and the average of all the measures was considered to represent the smallest particles in the sample. In the ores examined for this purpose these fine settled products consisted almost entirely of quartz, and therefore, the quartz measurements are taken for the five finest sizes given in Table 392.

Kunhardt[28] speaks of this quiet settling in breakers being used at Schemnitz, Hungary, as a regular method of controlling the work of classifiers; "for a

practised eye the appearance and quantity of the sediment in the glass is a certain indication of the nature of the slime."

§ 869. *Settling Fine Slimes by Means of Dissolved Substances and by Heat.* —In sampling mill products that contain slimes carried in water it should be remembered that the extremely fine particles may not settle in several days or even weeks. However, there are various substances, small quantities of which dissolved in the water will coagulate the particles into comparatively large grains, which settle rapidly. Such a substance should be used in every important case, for the fine slimes are apt to contain a large percentage of the *value* although they may be very small in *weight*. At one mill where the samples were allowed to settle only a short time before pouring off the water, assays of the tailings indicated 8 to 8½ ounces of silver per ton, but, when the slimes were thoroughly settled, the tailings assay was found to be 18 ounces of silver per ton.

The following experiments, made in the author's laboratory, give some exact results with the use of lime, alum, common salt, hydrochloric acid and sulphuric acid. The slimes were obtained by stamping a quartz ore from North Brookfield, Nova Scotia, containing some slate, a fractional percentage of arsenopyrite and some free gold, using a punched screen with slots $\frac{1}{40}$ inch wide and a height of discharge of 4 inches. After passing over amalgamated plates and a vanner, the coarse portion was settled out in small tanks, while the finest slimes were carried into a larger tank from which the water was pumped back to the stamp mill and used again. After the mill run was finished and the water had remained quiet in the large settling tank for half an hour, a large sample of the slimy water was taken from the top of this tank. Fifteen careful tests showed an average of 12.8% suspended matter, the extreme variation being from 12.3% to 13.0%. The results, given in Table 394, are based on this average. The tests were made on one liter quantities in beakers of such size that the water stood 6½ inches deep in them.

TABLE 394.—EFFECT OF DISSOLVED SUBSTANCES IN SETTLING FINE SLIMES.

The figures below show the percents. of total slime settled out, by the use of different percents. of dissolved substances, in different periods of time.

Time of Settling.	Nothing Added.	Common Salt.				Ammonia Alum.			
		½%	1%	2%	5%	½%	1%	2%	5%
½ hour	22	89	99	100	100	97	98	.....	91
3 hours	72	98	98	100	98	100	100	100	.....
14 hours	.....	100	100	100	100	100	100	.....	.....
15 hours	.....	.....	.....	.....	.....	.....	.....	.....	.....
20 hours	94	.....	.....	.....	.....	.....	.....	.....	.....

Time of Settling.	Potash Alum.				CaO Present after Adding Lime Water.					
	½%	1%	2%	5%	.00805%	.00595%	.01136%	.02163%	.02885%	.04167%
½ hour	99(?)	94	98	95	77	95	98	100	100	95
3 hours	99	99	95	96	91	100	100	100	100	98
14 hours	100	.....	100	.....	.....	.....	.....	.....	.....	.....
15 hours	.....	.....	.....	.....	100	98	100	100	96	.....
20 hours	.....	.....	.....	.....	.....	.....	.....	.....	.....	.....

Time of Settling.	Hydrochloric Acid.			Sulphuric Acid.		
	0.19%	0.39%	0.77%	0.15%	0.29%	0.57%
½ hour	100	100	100	100	96	99
14 hours	100	.....	.....	99	.....	.....

Varying proportions of salt and of alum were added in fine powder and stirred in. Where lime (CaO) was used, it was added as clear (filtered) lime water, in order to eliminate any possible mechanical effect of suspended lime. The lime water contained 0.125% CaO; and the per cents. of CaO indicated in the table

show the amount present after adding respectively 25, 50, 100, 200, 300 and 500 cc. of lime water to 1,000 cc. of the slime. The tests in which lime was used were also stirred, to produce a thorough mixture. In this connection, it should be noted that while the simple addition of even the smallest quantities of lime used caused the slime to agglomerate into distinct grains*, a fairly vigorous stirring caused it to form into comparatively large flakes which settled much more rapidly than the grains. Violent stirring, however, tended to break up these flakes and so hinder the settling somewhat. The stirring seemed also to help the coagulation in the case of salt and alum, but it did not produce large flakes.

§ 870. The results given in the table may be in error by 5%, because the original amount of slime was not constant. Compare 0.02885 and 0.04167% CaO after one half hour. However, we may conclude that 95 to 100% of all the slime settled out in half an hour when as much as 1% of common salt or of alum was dissolved; but when nothing was added, only 22% settled out in this time; in fact, twenty hours were needed to settle out 95% when nothing was added. Weight for weight, lime is much more effective than salt or alum. The presence of 0.006% or more of CaO caused at least 95% of all the slime to settle out in one-half hour. Judging by the eye, nearly all the slime (apparently at least 90%) settled out in two or three minutes in the presence of 0.01136% or more of CaO; and with the two smallest quantities of CaO, a large part of the slime settled out in two or three minutes.

It will be noticed that even the smallest quantities of hydrochloric and sulphuric acids caused everything to settle in one-half hour. With the largest amounts of hydrochloric acid (0.77%) and of sulphuric acid (0.57%) the water became almost perfectly clear in three or four minutes, and in the same time the smaller quantities of acid all caused very nearly complete precipitation, though there was a slight increase of cloudiness with the decrease of acid.

Table 394 indicates that common salt and alum were in most cases about equally effective. The effect of the latter, however, was always the more rapid at first. This is illustrated by the results with ½% of dissolved substance at the end of half an hour.

In regard to the mode of using the lime, it may not be worth while in the mill to filter the lime water, as the suspended particles of lime will do little or no harm in the settling.

In conducting the experiments, numerous tests were made to determine if any significant amount of salt or lime was retained in the settled slime, and allowance was made for any that was found. There should be no trouble in this respect if care is used to pour off the water as closely as possible before putting the settlings to dry.

The best substance to be used in solution for one kind of slime may not be good for another. For example, Chatard and Whitehead[115] found that with slimes from a certain ore "neither lime nor common salt gave good results; so sulphuric acid was tried. A slight effervescence was noted, and a small portion of the suspended material appeared to go into solution, while the rest began to subside; on making the solution alkaline with caustic soda the material flocculated and subsided rapidly." Chemical analysis showed that slight quantities of iron oxides and alumina were dissolved by the acid and were precipitated by the caustic soda. This precipitation may have helped the settling to some extent. It was also found that ore which was slimy and which did not settle readily when raw, usually settled readily after the ore had been calcined. In some

* Before adding anything to the slime, the suspended matter was too fine for the eye to distinguish individual particles.

other work Chatard found that emulsions of clay remained turbid as long as the liquid was alkaline or neutral, but clarified rapidly when acidified.

§ 871. Slimes also settle considerably faster when the water is heated than at the ordinary temperature. A beaker containing slime that would not settle clear by standing over night was left on the steam table for two hours, when apparently about 25% of the suspended matter had settled out. Another similar sample at the ordinary temperature showed no settlings on the bottom of the beaker at the end of two hours, though the top part of the sample had cleared somewhat.

It does not appear to be known why dissolved substances coagulate and settle slimes, but the following explanation is perhaps the most generally accepted: Molecules of water are attracted to the solids so strongly that there is a permanent film of water on each particle. In the case of fine particles, these films are so large compared with the size of the particles that the virtual specific gravity of the latter is much decreased. Certain soluble substances have a stronger affinity for the water molecules than the suspended slimes have, and therefore the film of water is reduced or even entirely removed. Thus, not only do the particles fall more rapidly because their normal specific gravity is restored, but, being no longer kept apart by permanent water films, their attraction for each other unites them into comparatively large grains or flakes which settle more rapidly than the finer particles. A good analogy is found in the experiment of dropping a lead bullet and a downy feather in air. The latter may take a hundred times as long to settle as the former, but if they are dropped in a vacuum they reach the bottom together.

§ 872. Beside the use of dissolved substances for testing, they are also used in certain cases in regular mill work, notably for settling washed clay and for settling fine slimes in gold mills. Mr. C. H. Daniels of the Kaolin Manufacturing Company, Dillsboro, North Carolina, has furnished the following data from their practice in settling kaolin. The pulp or "slip," freed from sand, is run into tanks 50 feet long, 8 feet wide and 4 feet deep, through screens on which a few lumps of alum are placed. Some grades of kaolin settle almost immediately by themselves, while others would not settle thoroughly in weeks without alum.* When using the latter the man can begin to draw off the water from a settling tank in from 15 minutes to 12 hours after the tank is filled, the water that is drawn off having only a *slight* milky appearance. The quantity of alum used is about 1½ pounds in 15,000 gallons of water (=about 0.0012%). The water as it enters the settling tanks carries about 300 pounds of kaolin per 100 gallons. Several substances have been tried in place of alum, but none were found to be as good. In the time necessary to clear the water with alum, common salt would settle only about 10% of the clay.

It is stated that in South African gold mills 0.0021% of dissolved lime (CaO) will insure the settling of the slimes in a properly adjusted *spitzkasten,* but that 0.001% does not have much effect.[189 and 190] The amount of lime necessary in this case is undoubtedly greater than it would be if the water was at rest instead of being in continual motion.

In Mill 44 the author collected several hundred gallons from the waste overflow of the distributing tank that fed the slime tables. The material that settled in 24 hours quiet standing was thrown away and the water allowed to stand in a quiet place for a week. A two-gallon bottle was filled with some of the material that would not settle in 24 hours but would settle in a week, and set in the office where it received constant jarring from the steam stamps. In about 12 hours there was a depth of perhaps ½ inch and at the end of a week about 3 or 4 inches of clear water at the top of the bottle, the slime set-

* The less plastic grades appear to settle most readily.

tling out like cheese curd from whey. This result is analogous to the effect of stirring mentioned in § 869.

§ 873. JIGS.—For testing lots of from 100 to 2,000 pounds, the author has found very convenient a three-sieve Harz jig, with sieve 9 inches square in the clear. The height of the tailboards is 4 inches on each sieve, and the plungers are the same size as the sieves. These jigs should be driven by step pulleys and adjustable eccentrics to permit variations in the speed and the length of throw. By having sieves with different sizes of holes, which drop quickly into place,

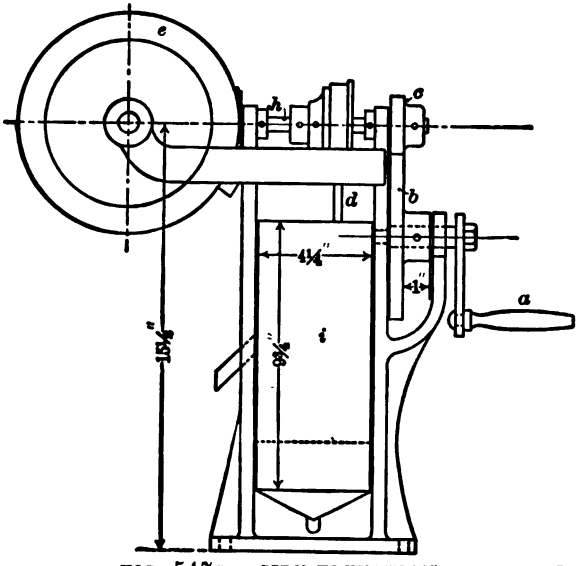

FIG. 547*a*.—SIDE ELEVATION OF VEZIN'S TESTING JIG.

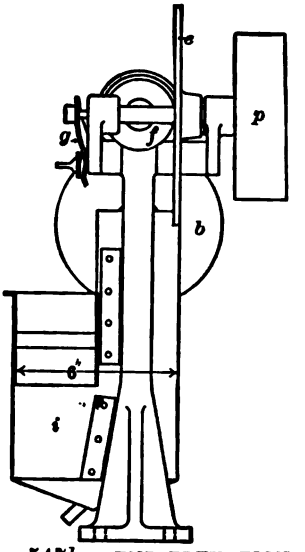

FIG. 547*b*.—END ELEVATION.

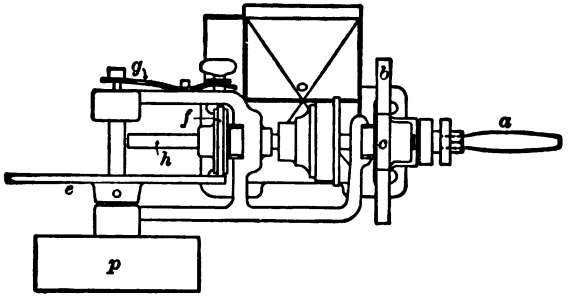

FIG. 547*c*.—PLAN.

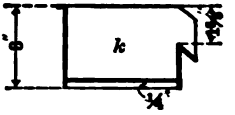

FIG. 547*d*.—SIEVE BOX.

one can jig sized products, classified products or simple crushed products at will. with very much the same results as in large machines. The best adjustments for any ore have to be determined by trial, but the data given in §§ 425-430, §§ 450-453 and §§ 460-463 will serve for guidance.

Mr. Henry A. Vezin of Denver, Colorado, has designed a small jig (see Figs. 547*a*-547*d*) which can be driven either by hand or by power, and which is very convenient for lots weighing less than 100 pounds. The sieve measures 3×4 inches. The plunger is attached to the eccentric rod *d*, which is driven, through

gear *b* and pinion *c*, by the crank *a*. When the jig is to be run by a belt and pulley *p* instead of by hand, *c* is removed and the friction disc *e* on the driving shaft is pressed against the wheel *f* by means of the spring *g*. The disc *e* revolves at a constant rate, but the speed of *f* can be varied by moving it along the eccentric shaft *h* to any desired distance from the center of *e*. The jig box *i* is made of galvanized or tinned iron. The sieve is soldered into a box *k*

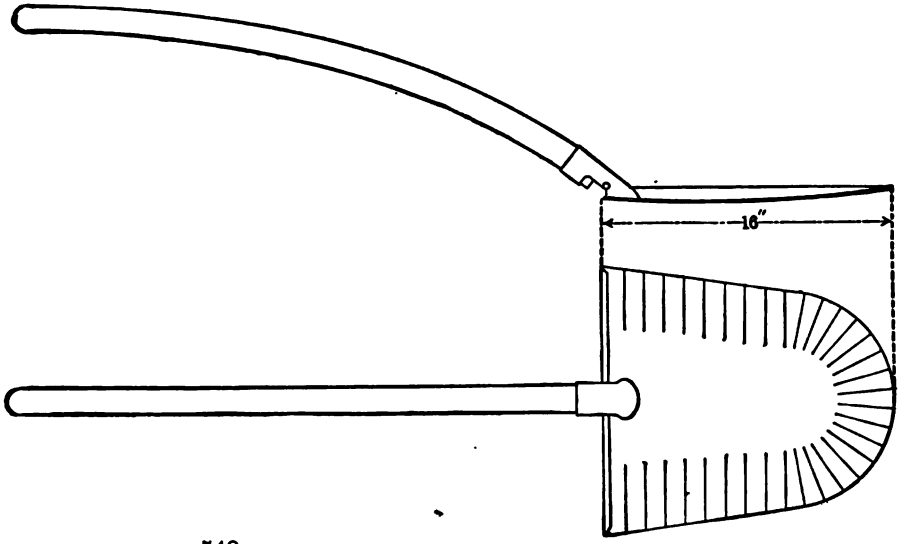

FIG. 548.—STANDARD CORNISH VANNING SHOVEL.

which sets into the sieve compartment of the jig. The height of the tailboard is varied from 1½ inches to 3 inches, depending on the size of ore treated. The jig can be fed until the sieve box fills with concentrates, the tailings flowing off constantly.

When it is desired to get information in regard to very small samples of a pound or less, the little jig described in § 473 will be useful. The effect of

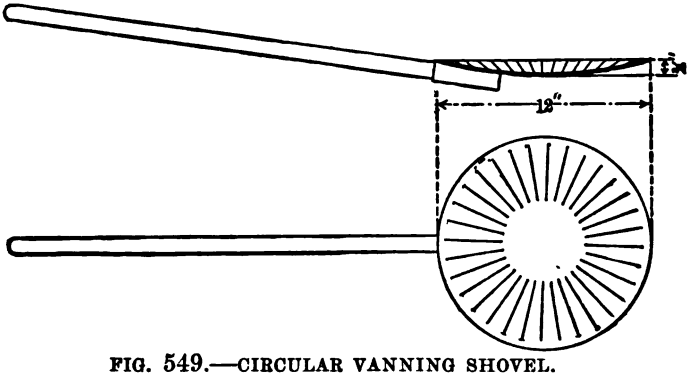

FIG. 549.—CIRCULAR VANNING SHOVEL.

jigging with pulsion and without suction may be studied with the simple apparatus described in § 467; for it is shown in § 470 that the continuous current of this apparatus produces the same result as the intermittent pulsion of a jig.

Other testing jigs have been devised by Buttgenbach,[281] Hallett[259] and Duffield.[329]

§ 874. THE CORNISH VANNING SHOVEL (see Figs. 548 and 549) is used to separate the heavy and light minerals in products from 3 or 4 mm. in diameter down to slimes, but it is most satisfactory for products finer than 1 mm. It serves to ascertain whether crude ore is susceptible of concentration, whether concentrates contain waste sand, and whether waste sands contain valuable mineral. In using the shovel a small quantity of pulp is placed on the blade with ample water, and the shovel is given a horizontal circular motion, by which the heavy grains are settled. The lighter portion of the waste is then washed off by flowing the water across the surface. The circular motion and the flowing are repeated often enough to remove a large part of the light waste sand. Then, with less water than before, the concentrates are brought forward to form a head, by giving a few tosses to the shovel, using a peculiar jerking motion; and the water is flowed over this head by another peculiar motion of the shovel. This tossing and flowing are repeated a number of times to get a thoroughly cleaned head.

The vanning shovel is the most satisfactory tool that has thus far been produced for quickly testing the products of vanners, tables and jigs. It enables

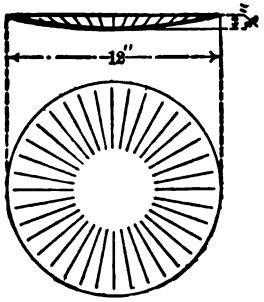

FIG. 550.—VANNING PLAQUE.

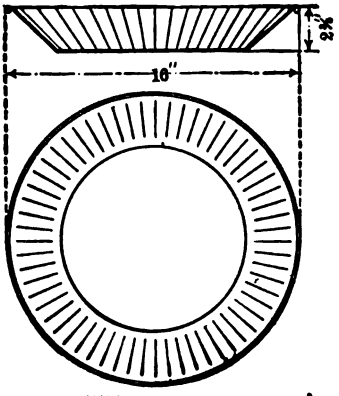

FIG. 551.—GOLD MINERS' PAN.

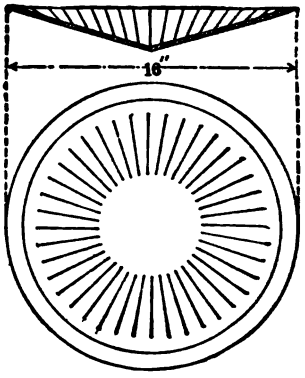

FIG. 552.—BATEA.

the ore dresser to tell in a minute whether or not his machines are working properly.

THE VANNING PLAQUE (see Fig. 550) is of about the same size and concavity as the vanning shovel, but has no handle. It is made of sheet iron, but has a white enamelled surface which permits colored minerals to be readily seen.

THE GOLD MINERS' PAN is used where a few very heavy grains as of gold are to be looked for in a mass of gravel. The pan (see Fig. 551) is nearly filled with gravel which is thoroughly softened up with water; the pan is shaken sidewise and in a circular manner to give heavy particles an opportunity to settle; water is then flowed across the top removing the top layer of waste. The shaking and flowing are repeated until the contents of the pan are reduced to a very small quantity and then the gold may be brought out either by tossing it out as on a vanning shovel; or, by running the water carefully around the groove between the bottom and the side of the pan, a head will form and the gold "colors" show.

THE BATEA (see Fig. 552) is worked in the same way as the pan but the gold or concentrates collect at the center point which is the apex of the cone. Some persons prefer the pan, others the batea for this work.

THE HORN SPOON has found special favor in looking for mercury in the pulp from amalgamated plates or pans; but it is too small for general ore dressing work.

§ 875. FRUE VANNER.—A full sized Frue Vanner (see § 480) will be found well adapted to testing lots of ore weighing 500 pounds or more. The ore should be crushed to $\frac{1}{30}$, $\frac{1}{40}$ or $\frac{1}{50}$ inch in diameter; and the adjustments will generally range about as follows: Slope $3\frac{1}{2}$ to 6 inches in 12 feet (for most purposes $4\frac{1}{2}$ inches will do good work); feed water 20 kilograms (about 5 gallons), more or less, per minute; 200 shakes per minute; and a belt travel of 30 to 60 inches per minute dependent on the other adjustments. The speed of travel should be chosen which yields heads nearly free from quartz and tailings free from coarse concentrates.

AN END SHAKE VANNER with belt 2 feet wide and 8 feet long between centers of end rollers, with wash water jets 3 inches apart, having a very steep slope ($1\frac{1}{2}$ inches in 1 foot), making 240 shakes per minute of $\frac{1}{2}$ inch each and having a belt travel of 80 inches a minute, is a good design for cleaning up and finishing the fine concentrates of a canvas table.

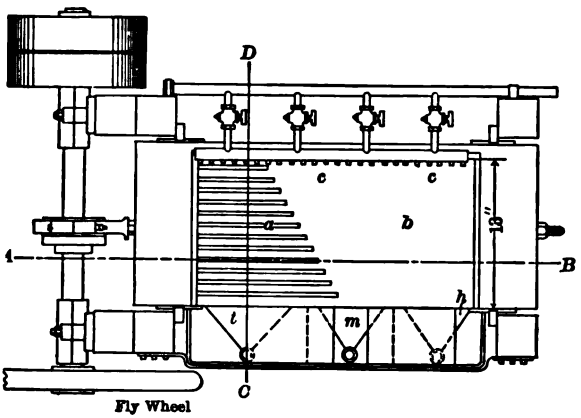

FIG. 553*a*.—PLAN OF JERKING TABLE.

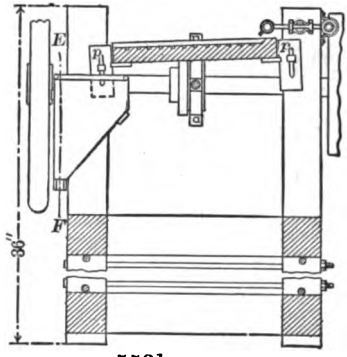

FIG. 553*b*.—SECTION ON *CD*.

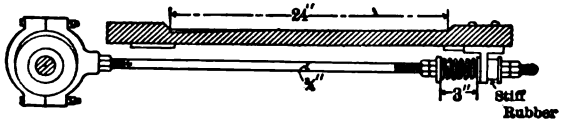

FIG. 553*c*.—SECTION ON *AB*.

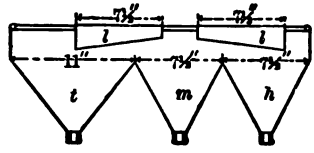

FIG. 553*d*.—SECTION ON *EF*.

§ 876. JERKING TABLE.—The author has found a small Wilfley table, 6 feet long, satisfactory for testing purposes. For lots of a few kilos he has constructed the little table shown in Figs. 553*a*-553*d*. The surface is made after the manner of the Hallett table, that is the riffles are made by cutting taper grooves in a plane surface so that there is no angle between the concentrating plane *a* and the cleaning plane *b*. The Bartlett driving mechanism (Fig. 396*b*) is used on account of its simplicity, and the slope is controlled by means of the adjustable bearings *p*. The ore is fed from a feeder similar to Fig. 491; wash water is applied through the jets *c;* and the products drop into the hoppers *t*, *m* and *h*, and from these into buckets. The proportional quantity of ore going into each product is controlled by the little launders *l*, which are adjustable to the right and left. The table, being made of wood, is painted so that alternate wetting and drying shall not make it warp.

§ 877. SLIME TABLE.—The most satisfactory apparatus for determining the best slope and water quantity for slime tables to treat any ore would be a table similar to the Ferraris (see § 504). Very good results can be obtained, however, with the simple table shown in Figs. 554*a*, 554*b* and 554*c*, which is 6 feet long, 2 feet wide and has a surface of ground glass framed in wood. To prevent cracking of the glass, a piece of felt should be placed between it and the frame both above and below. The slope of the table can be adjusted by means of the rope *a* and pulley-blocks *b*. For the sake of careful adjustment, it is well to have the rope *a* connected to a second set of pulley blocks overhead. The rope from the second set comes down to the side of the table. At the feed end *c* there should be a good distributor, such for example as Fig. 401*b*; and the discharge end *d* should be rounded in order to discharge the ore readily instead of allowing a bead to form, as happens when the edge is square. In using this table, it is set at some definite slope, and water is run on through the distributor

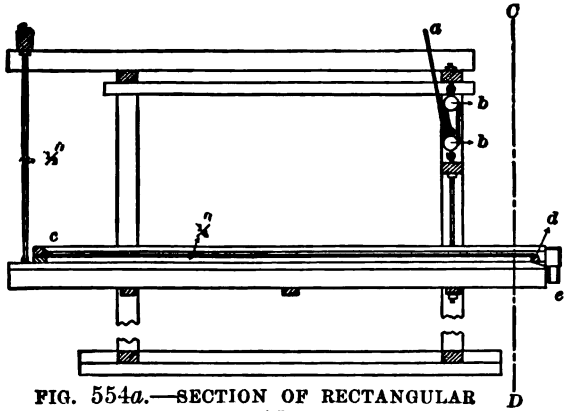

FIG. 554*a*.—SECTION OF RECTANGULAR SLIME TABLE ON *AB* OF FIG. 554*c*.

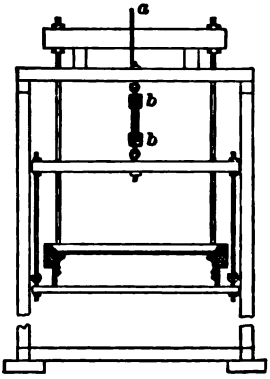

FIG. 554*b*.—SECTION ON *CD*.

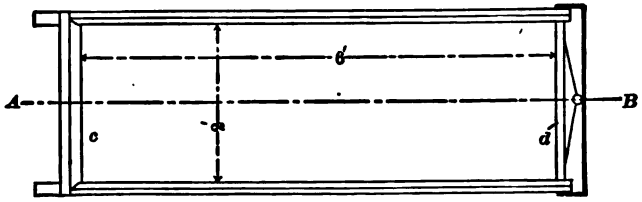

FIG. 554*c*.—PLAN WITHOUT SUPPORTING FRAME.

at a definite rate. A portion of the wetted pulp, say 50 grams, is then fed in with the water, about 5 seconds being used for the feeding. As the products pass out through the spout *e* at the lower end, they may be caught in a row of little pans set on a board, each pan being held under the spout for say 5 seconds. The first pan will catch the first tailings, the second pan the second tailings, and so on through all grades of tailings, middlings and heads. A bucket will have to be used for the last heads, for considerable water must be used to hose them off. A series of such tests, using different slopes and different water quantities, will indicate the best conditions for any case. In applying the results to circular convex tables, it should be remembered that the quantity of water per minute flowing over one foot width of the experimental table corresponds to the quantity on one foot of circumference at one or two feet from the outer margin of the circular table. Near the center of the circular table

practically no separation takes place, because the quantity of water *per foot of circumference* is too large for good work.

In making slime table tests, reference should be made to the conclusions in § 509.

MUNROE'S LABORATORY SLIME TABLE (see Figs. 555*a*-555*c*) has a ground glass surface 5 feet long and 4 inches wide, mounted in a brass frame. The slope may be varied by four leveling screws. Water is fed on at the head end by eight jets of water. The ore is put into a feed tray with eight grooves in it, which is pushed forward under the water jets.

§ 878. CANVAS TABLE.—A table 10 feet long, 4 feet wide, with adjustable slope, is very satisfactory for testing. It should have a good distributor at the head end, and a tilting tail at the lower end for shunting the tailings into one launder and the heads into another. The grade of canvas that gives the best results will have to be found by trial for each ore; but for pulp with 0.5-mm. and finer grains No. 6 duck will usually be satisfactory. The canvas holds the concentrates better when the woof (cross threads) is laid down the slope than when it is laid across the slope; and it is best, if possible, to have it wide enough so that a single width covers the whole table.

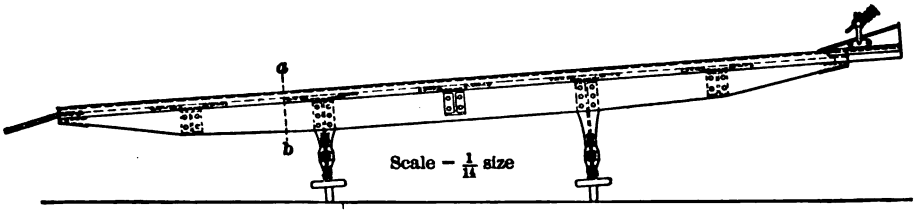

FIG. 555*a*.—ELEVATION OF MUNROE'S LABORATORY SLIME TABLE.

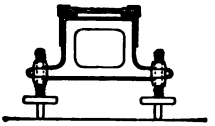

FIG. 555*b*.—SECTION ON *ab*.

FIG. 555*c*.—FEED TRAY.

§ 879. TESTING BY OIL.—The use of oil is briefly described in § 617. The chief principles will be here stated as a guide to those desiring to make small tests. (1) The oil or residuum should be sufficiently thick; the thinner mineral oils do not appear to act well. (2) The oil should not be shaken with the water and sand because shaking tends to form an emulsion, from which the oil does not separate well. (3) The water should be added first to thoroughly wet the whole batch and render the gangue immune to the oil. (4) The manipulation should be such as to give all particles of concentrates a good contact with the oil so that they can be coated by the oil and taken up into the oil layer. (5) Enough oil must be used so that the resulting layer of oil and heavy mineral has a combined specific gravity lighter than water. When all these conditions are fulfilled the heavy minerals that are susceptible of treatment should be obtained in the upper oil layer and be skimmed off with ease, leaving the gangue at the bottom of the water layer.

The operation may be carried on as follows: A tablespoonful of residuum is added to a large beaker of water and then the finely ground ore is introduced and the mixture poured back and forth from one beaker to another for 15 or

20 minutes. After letting it stand to allow the tailings to settle, the oil is poured off, gasoline added to the oil and the mixture heated to boiling which precipitates the sulphides. The latter are washed on a filter and assayed; the tailings are also assayed.

§ 880. TESTING BY HEAVY SOLUTIONS.—If an ore is crushed fine enough to sever the heavy mineral from the light, and a sample is stirred into a solution that has a specific gravity less than the heavy mineral but greater than the light mineral, there will be an immediate separation, the lighter mineral floating on top of the liquid and the heavier mineral sinking to the bottom. Sized products will yield better results than those containing all sizes. The following are some of the solutions that have been used: Klein's solution (borotungstate of cadmium), specific gravity 3.6; Braun's liquid (iodide of methyl), specific gravity 3.3; and Thoulet's solution (iodide of potassium and mercury), specific gravity 3.28.[52] Klein's and Thoulet's solutions can be diluted to a desired specific gravity with water; but Braun's liquid can be diluted only with petroleum, benzene or xylene. A saturated solution of zinc sulphate, specific gravity 1.5, is heavy enough to float some coals away from slate and pyrite.

The specific gravity of mercury is 13.6, that of pure gold is 19.33. Gold will readily sink in mercury when thoroughly wetted by it, while quartz floats upon it.

MAGNET.—A permanent steel horseshoe magnet serves to pick out magnetic particles from sand. A small bar electromagnet does the same more perfectly. A small powerful horseshoe electromagnet with thin poles and great magnetic intensity (Wetherill's magnet) will lift many substances having extremely weak magnetism. By grading the current in this last magnet minerals with different degrees of magnetism may be picked out separately.

§ 881. AMALGAMATION.—An amalgamation test for gold may be made in a miners' pan by mixing the crushed ore with water, adding a few grains of mercury, and thoroughly agitating for a considerable time. If water is used on the bucking board or in the hand mortar during the crushing, the gold will probably be brighter and amalgamate more readily. The addition of a minute quantity of sodium to the mercury will make it still more active in catching the gold. After the mercury has caught all the gold it will, it is separated by washing off the sand; then dried and distilled, and the impure gold so obtained can be purified by cupelling and parting according to the usual assay methods. Where the amalgam is clean and small in amount it is more economical to treat it with nitric acid which dissolves everything but the gold and thereby reduce the number of operations to one; this is not applicable when silver and gold are both to be determined.

A test on a larger scale may be made by the use of an *amalgamated copper plate* of suitable size which has been prepared with bright, clean silver amalgam (see § 528). The ore fed to this should come from a small stamp or some machine crushing wet which will brighten the gold preparatory to feeding it upon the plate. After the test the copper plate can be washed off clean by water and the gold valued by scraping the plate carefully to save the amalgam (see § 532) which is then dried, distilled, cupelled, parted and weighed. To treat the pulp from a battery of three stamps weighing 225 pounds each, the author uses an amalgamated plate 6 feet long and 2 feet wide.

§ 882. BALL MILL TEST.—A little clean up barrel (see Fig. 556) has been used successfully for small amalgamation tests at the Massachusetts Institute of Technology. It has an inside diameter of 16 inches and runs at 15 to 20 revolutions a minute. Iron balls, 2 inches, 1 inch or ¾ inch in diameter, are introduced with the sand, to brighten the gold. The mercury is fed either at

first or after the grinding has proceeded for some time as seems best for the particular ore under treatment. The ore, in the condition of sand $\frac{1}{30}$ inch in diameter more or less is charged with water through the side opening. After the machine has been run from a half hour to three hours, as desired, the pulp and mercury are discharged into one or more gold miner's pans by removing the screw plug. The amalgam is panned out, cleaned, dried, retorted, cupelled, parted and weighed.

Amalgamation in a Bottle.—A 1-quart glass fruit jar may be mounted to revolve slowly on the end of a shaft, and with its axis in line with the shaft. If gold bearing pulp with water and a little pure mercury is charged into the fruit jar it may be revolved a longer or shorter time to ascertain the readiness with which the gold is taken up by quicksilver. A number of fruit jars may be mounted on the device shown in Figs. 557*a* and 557*b*, and in this way several tests can proceed at the same time. The bottles are held by the sheet steel springs *a;* and it is well to protect the bottle by felt pads tacked on at *b*. The machine revolves 6 to 10 times a minute. The results may be obtained by cleaning, drying and retorting the amalgam, cupelling, parting and weighing the gold; and tailings may be saved, dried, weighed and assayed, this assay being compared with that of the original ore.

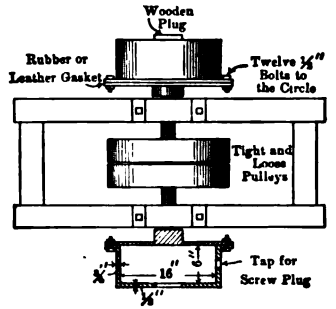

FIG. 556.—PLAN OF BALL MILL.

A frame attached to an eccentric and subjected to 350 two-inch vertical throws per minute has been used for shaking the bottle by the Ottawa Gold Mining and Milling Company, at Keewatin, Ontario, for testing custom ores. The

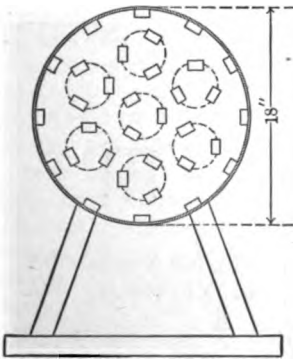

FIG. 557*a*.—END ELEVATION OF AMALGAMATION REVOLVER.

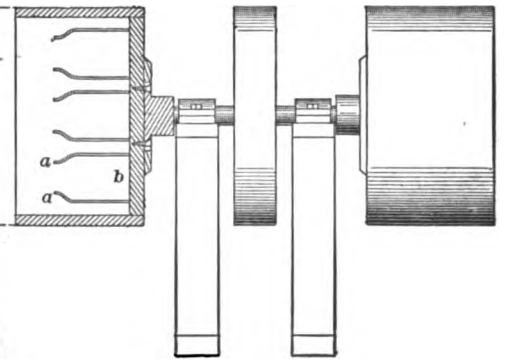

FIG. 557*b*.—SIDE ELEVATION.

method of testing was to take from 3 to 12 charges of the carefully sampled 40-mesh ore, each weighing 100 grams and having water and 100 grams of mercury added, and agitate for 30 minutes. Results of the total charges were averaged and were found to check with the results of large mill runs within from 1 to 3% on free gold.[184]

§ 883. *Pan Amalgamation for Silver.*—A kilogram (2.2 pounds) of silver ore may be treated in the small amalgamating pan shown in Figs. 558*a*-558*d*. The pan is supported on four iron legs, not shown in the figure, to per-

mit heating by a lamp beneath. The muller or grinder revolves 120 to 150 times a minute. The pulp should be crushed to pass through a 40-mesh screen before being charged. The various methods of running an amalgamating pan may be tried, using preliminary grinding with muller down, heating the pan,

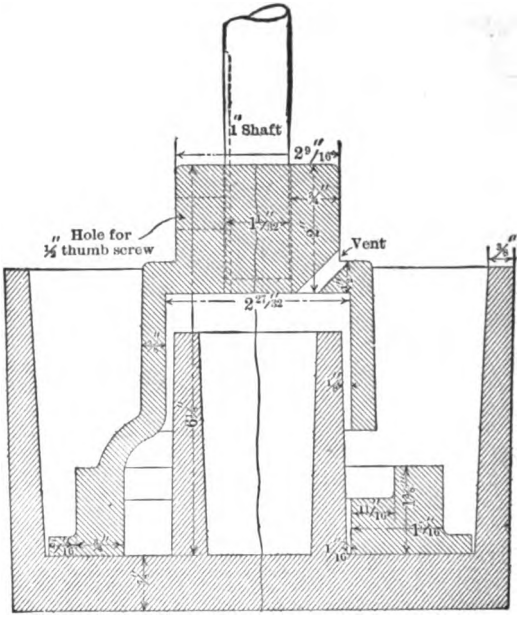

FIG. 558*a*.—SECTION OF AMALGAMATING PAN ON LINE *CDE* OF FIG. 558*b*.

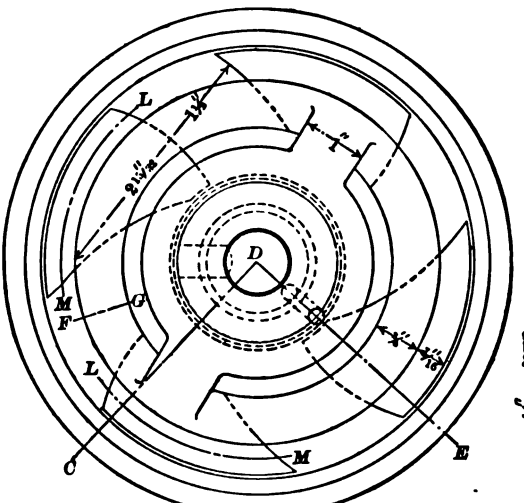

FIG. 558*b*.—PLAN.

FIG. 558*c*.—SECTION OF MULLER ON *FG*.

FIG. 558*d*.—SECTION OF MULLER ON *LM*.

adding common salt and sulphate of copper, adding acid, etc., followed by final stirring and amalgamation with the muller up, using such quantity of mercury as seems wise, adding zinc amalgam, sodium amalgam, alkali or any of the

other reagents that may be preferred. The amalgam may be panned out in a miner's pan, retorted, melted, weighed and valued; and the tailings, collected on filters so as to lose none of the finest portions, can be dried, weighed and assayed. The assay of the tailings compared with that of the original ore will be found to yield a better valuation of the efficiency of the process than the actual yield of precious metal in the amalgam.

§ 884. CLINOMETERS are used to measure slopes. A carpenter's level and foot rule will answer for most cases, and will give inches fall in 12 inches distance which is a common mode of measuring and stating the slope. The dealers in surveying instruments have little clinometers for measuring slope angles in degrees. A very good one is that known as Linton's level, sold by Queen & Company of Philadelphia. It measures all angles from horizontal to vertical down to the nearest 5 minutes of angle, and it is well and substantially made.

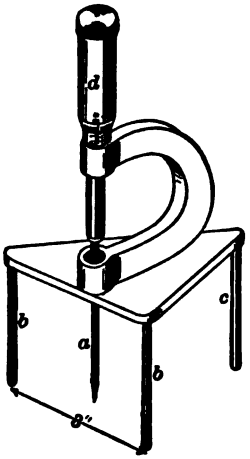

FIG. 559*a*.—FILM GAUGE.

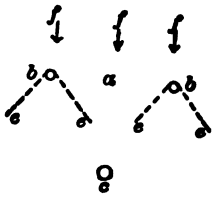

FIG. 559*b*.—WAVES FROM FEET.

FILM GAUGE.—The gauge, shown in Fig. 559*a*, is useful for measuring the thickness of water films on tables. The needle *a* can be raised and lowered by the micrometer-screw *d*, which reads zero when the point of the needle is exactly in the same plane as the lower ends of the legs *b b c*. The feet *b b* should be far enough apart so that the waves *e e* (see Fig. 559*b*) shall not back up and change the depth when the water is flowing in the direction indicated by the arrows *f f f*. The point *a* is lowered until contact with the water is just obtained, and then the reading gives the thickness of the water film. The usual form of micrometer gauge may be made over as indicated in the sketch, and give a reliable tool for this work.

§ 885. SPECIFIC GRAVITY TEST.—Determinations of specific gravity are valuable to the ore dresser in several ways. They may show that the minerals are too near to each other in specific gravity to be well separated by methods depending upon that property; or they may show that the specific gravities of the minerals are far enough apart to suggest better work than he is doing and so start him on a hunt for a remedy; and finally since the specific gravity of mixtures of the heavy and light materials ranges all the way from the specific gravity of the former to that of the latter (in proportion to the percentage of the two minerals) it follows that a determination of the specific gravity of a two mineral product may serve as a rapid approximate assay of value. This method is recommended by Rittinger, and is used at Tarnowitz, Silesia.[445] The method of computation is quite simple and is indicated here:

Let *a* be the specific gravity of the heavy mineral; let *b* be the specific gravity of the gangue; let *s* be the specific gravity of the product; let *x* be the % of the heavy mineral. Then $x=\frac{(s-b)\ 100}{a-b}$. As an example let us assume a mixture of quartz (specific gravity 2.6) and galena (specific gravity 7.5) with a net specific gravity of 3. Then $x=\frac{(3-2.6)\ 100}{7.5-2.6}=8.16\%$ of galena in the product. This method is not accurate enough to be of use when large value is contained in a small weight of mineral, as in the case of dry silver ores.

MICROSCOPE.—A microscope is a very great help to the ore dresser. This may range from a hand lens magnifying two diameters, up to a microscope magnifying 250 diameters. With it he can see if the mineral that is puzzling him is in very thin scales and so floats away where, by its specific gravity, he would not expect it to do so; or if it is in very finely included grains in the waste gangue; or again if it is in the finest slimes. In these and many other ways the microscope will explain questions which otherwise baffle the ore dresser, and will thus greatly assist in overcoming difficulties. By using a high power instrument a rapid approximate chemical analysis of a fine product may be made by counting the grains of clean concentrates, of clean gangue and of included grains in a restricted field.

ASSAY OFFICE.—The whole testing business hinges on an assay office equipped with complete assay outfit such as is furnished by nearly all dealers in mining machinery. This would include crushing apparatus, screens, furnaces and balances for gold, silver and lead ores, and also chemical apparatus for other ores. The samples for analysis should be put through a sieve with 100 or 120 meshes to the linear inch or sometimes finer and in case pellets of native metal occur which will not pass through the sieve these pellets should be carefully saved and analyzed separately.

§ 886. WEIGHING AND MEASURING.—Several remarks are in order here. (1) To get an exact record of the amount of ore treated in the daily routine of mill work, all of the cars would be weighed both full and empty. The difference shows the net weight of ore. The percentage of moisture should be determined by means of a moisture sample, and the weight of dry ore can then be calculated. In commercial work the need of saving time and cost often causes the substitution of measuring for weighing. The weight of a car load of ore having once been obtained, a tally of the number of cars gives the approximate weight of ore delivered to the mill in a given time. Where this method is used the figure adopted for the weight of a car load of ore should be obtained with care by averaging the weights of many car loads, and a new value should be obtained periodically to cover possible changes in the weights of ore and the sizes of cars. A method sometimes adopted is to weigh a few cars taken at random every day and adopt the average weight of ore contained in them as the average of all cars for that day.

(2) The weight of a cubic foot of solid rock, of broken rock, or of sand will have to be obtained for every mine because of the varying specific gravity of ore as between mine and mine. The weight of a cubic foot of unbroken quartz is 2.64×62.4 pounds$=165$ pounds, in which 62.4 is the weight of a cubic foot of water at 60° F. and 2.64 is the specific gravity of quartz. On the Rand in South Africa, previous to 1898, 100 pounds was assumed as the weight of a cubic foot of broken quartz, but several tests at the Ferreira mine showed only 95 pounds per cubic foot.[418] Some figures are given in the appendix showing approximately the weights of various kinds of rock both broken and in place.

(3) One often needs to ascertain the quantity of a product passing some point in the mill. If the stream can be diverted into a bucket or barrel for a stated time, for example one minute, and this catch repeated a number of times during the day to average up inequalities of work, the resulting catch represents the quantity passing in the total time run. This product is also available for any sizing tests, assays or chemical examinations that may be needed. Before pouring off the water the fine slimes should be carefully settled out, especially if the sample is to be used for assays or sizing tests. Dissolved substances may be used to assist the settling (see § 869); and if in any case this is not effective, it may be necessary to filter the decanted water on a cloth filter or in a filter press, and in cases of extreme value even to evaporate the whole of the water. In

any case, after pouring off the water, the material should be dried before weighing.

(4) It is often necessary to know the quantity of water passing a point in the mill. This should be diverted a number of times through the day and weighed or measured. If sand comes with the water, the former should be separated, dried and weighed, and its weight subtracted to get the exact weight of water. If p represents the weight of water, in pounds, then $p \div 62.4$ gives cubic feet, and $p \div 8.342$ gives gallons.

§ 887. COMPUTING RESULTS.—Examples of computation are given in § 489, Tables 363 to 367, § 676, § 889, § 891, § 893, and § 897, and in various other parts of the book. It should always be remembered that the value of such calculations depends on having accurate samples, weights and assays; otherwise the conclusions are very apt to be misleading. Too much emphasis cannot be laid on this point.

ONE VARIABLE AT A TIME.—Whether the ore dresser is searching for a process or carrying on regular mill work, he is always experimenting, trying to see if he cannot hit upon some set of adjustments of his machines that will yield better results than those already employed. The importance of varying only one adjustment at a time, establishing the best value of that under the conditions submitted, cannot be overestimated. The moment two or more adjustments are made at the same time the observer is at a loss to know to which the improvement is due. Take, for example, a jig working upon the first spigot product of a classifier. In establishing the best conditions we can vary the mesh of the sieve, the size of the bottom bed material, the depth of the bottom bed, the height of the tailboard, the amount of plunger throw, and the amount of hydraulic water, ranging all the way from much suction to little suction, from a very free whole bed to a very tight whole bed. We may first try to have the jig make its own bottom bed, and ring in all the changes in hydraulic water, looking for hutch product free from gangue and tailings free from valuable mineral. Next we may change the throw of the plunger, then hunt again for the best hydraulic water; and a number of these trials will be made until the best throw is found, with its corresponding hydraulic water. We next raise the question of trying a coarser or finer screen. After the first change is made we must again hunt for the best plunger throw and for the best hydraulic water quantity. After trying several sieves, with the throw and water tests that go with them, we may conclude that it is better not to force the jig to make its own bottom bed, but to give it a coarser screen and bring bed material to it. A series of these variations can then be brought in. On looking over the complete record it will be easy to locate the set of conditions which on the whole give greatest capacity and cleanest work and are therefore the wisest to adopt. In comparative tests of different machines, the same ore should be used for both. This is a point that is often disregarded.

TESTING FOR A PROCESS.

§ 888. While testing for a process, many questions come to the ore dresser. Among them are the following: Should the ore be treated by:

(1) Gravel screen and hand jigs.

(2) Log washer with or without jig and classifier.

(3) Rolls, trommels, classifiers, jigs and tables or vanners; and under this process come the secondary questions: (*a*) Shall we crush coarse or fine. (*b*) Shall we recrush and reconcentrate tailings, and from what size to what size. (*c*) Shall we recrush and reconcentrate middlings, and from what size to what

size. (*d*) Shall we reconcentrate middlings without recrushing and from what size to what size.

(4) Steam stamps, classifiers, jigs and tables.

(5) Gravity stamps, amalgamated plates and vanners with or without canvas table and fine vanner.

(6) Rolls and magnetic concentrator, as chief processes or as auxiliary to some other, with low or high tension magnetic field.

(7) Cyanide for gold.

(8) Roasting and chlorination for gold.

(9) Pan amalgamation preceded or not by chloridizing roasting.

(10) Hyposulphite leaching following chloridizing roasting.

Other questions might be framed to include phosphate, mica, corundum, graphite, asbestos, coal, etc.

To help in deciding these questions, a number of tests are given below. As many of these should be tried as the circumstances will allow; but of course the ore dresser will use his experience and judgment to decide which promise the most information.

§ 889. MINERAL EXAMINATION.—If representative specimens of each mineral, as well as a general sample of the ore, are analyzed, the percentages of the different minerals can be calculated. In the following examples the different minerals are, for simplicity, assumed to be pure. Let us suppose that we have quartz (100% SiO_2), calcite (56% CaO, 44% CO_2), siderite (48.3% Fe, 13.8% O, 37.9% CO_2), galena (86.6% Pb, 13.4% S), blende (67% Zn, 33% S), and pyrite (46.7% Fe, 53.3% S); and that the general analysis shows Pb 17.32%, Zn 3.35%, Fe 7.085%, CaO 8.4%, SiO_2 45%, S 9.66%, CO_2 8.495%, O (by difference) 0.69%. Distributing these values proportionally among the different minerals gives the results shown in Table 395.

TABLE 395.—MINERALOGICAL PERCENTAGE COMPUTED FROM THE CHEMICAL PER CENTS.

Material.	Percent in Ore.	Percent Distributed among the Various Minerals.					
		Quartz.	Calcite.	Siderite.	Pyrite.	Blende.	Galena.
SiO_2	45.000	45					
CaO	8.400		8.4				
Fe	7.085			2.415	4.67		
S	9.660				5.33	1.65	2.68
Zn	3.350					3.35	
Pb	17.320						17.32
CO_2	8.495		6.600	1.895			
O	.690			.690			
Total	100.000%	45%	15.0%	5.000%	10.00%	5.00%	20.00%

Assays in specimens of the minerals, chosen to represent the average of the above ore, might be found to show silver as follows:—

Galena.....100 ounces per ton. Blende..... 10 ounces per ton.
Pyrite..... 20 ounces per ton. Quartz with a little stain..... 3 ounces per ton.

These multiplied by the per cents. of the minerals from Table 395 show that in a ton of ore the

Galena contains (100 x 20%) or 20 ounces silver.
Pyrite " (20 x 10%) or 2 " "
Blende " (10 x 5%) or 0.5 " "
Quartz " (3 x 45%) or 1.35 " "

The mine ore then has 23.85 " " per ton.

In practice no assays can be made to agree as perfectly as this and the actual assay of the ore will differ somewhat from 23.85 ounces silver per ton.

The above assays and analyses appear to indicate that the blende may or may not be thrown away according to the smelting charges on zinc ore, or the near-

ness of spelter furnaces; that the quartz would probably be thrown away; but that galena and pyrite should both be saved either together or in separate products, as indicated by the cost of production and the prices paid in the market.

Some ores will be better treated in the examination, as mineral aggregates rather than as pure minerals. A vein may have a streak of very finely disseminated mineral, and another streak of coarsely crystallized mineral. The mine ore can be separated, by screening and hand picking, into three kinds: mine fines, coarsely crystallized ore, and finely disseminated ore. These three can each be weighed up and assayed, and their relative values estimated and then the question will come up as to whether the finely disseminated ore shall be sent to stamps or jigged with the other; also whether the mine fines shall be treated on a separate set of machines or with the crushed ore.

§ 890. SIZING AND ASSAYING.—If a crushed ore or any other product be sized on a series of screens and all the oversizes assayed, an instructive table can be made of the results, and one which will show in what sizes the values mainly occur. Some tests of this kind are discussed in § 249 and § 489.

§ 891. HAND PICKING TEST.—A sample of ore can be crushed, sized on screens and each size picked by hand into three heaps, heads, middlings and tailings,—all particles having 50% or more concentrates in them, as estimated by the eye, being put with the heads, all particles estimated to have less than 50% and more than 5% of concentrates being put with the middlings, and

TABLE 396.—MODE OF TABULATING RESULTS OF HAND PICKING TESTS.

	Weight.	Assay in Copper.	Weight of Metal.	Percent of the Total Metal.
Heads.				
	Grams.	%	Grams.	
On 11.3 mm.	50	6	3.000	9.143
Through 11.3 on 8 mm.	40	6	2.400	7.314
" 8 on 5.66 "	30	7	2.100	6.399
" 5.66 on 4 "	25	7	1.750	5.333
" 4 on 2.83 "	20	8	2.400	7.314
" 2.83 on 2 "	15	8	1.200	3.657
" 2 on 1.414 "	15	8	1.200	3.657
" 1.414 on 1 "	8	9	0.720	2.194
" 1 mm.	20	10	2.000	6.095
Fine slimes	10	7	0.700	2.133
				53.239
Middlings.				
On 11.3 mm.	200	3	6.000	18.290
Through 11.3 on 8 mm.	120	3	3.600	10.970
" 8 on 5.66 "	25	3	0.750	2.286
" 5.66 on 4 "	10	3	0.300	0.914
" 4 on 2.83 "	5	3	0.150	0.457
" 2.83 on 2 "	2	3	0.060	0.183
" 2 on 1.414 "	2	3	0.060	0.183
" 1.414 on 1 "	1	3	0.030	0.091
" 1 mm.	0			
Fine slimes	0			
				33.374
Tailings.				
On 11.3 mm.	50	2	1.000	3.077
Through 11.3 on 8 mm.	40	1.5	0.600	1.829
" 8 on 5.66 "	70	1.2	0.840	2.560
" 5.66 on 4 "	65	0.9	0.585	1.784
" 4 on 2.83 "	65	0.9	0.585	1.784
" 2.83 on 2 "	33	0.8	0.264	0.805
" 2 on 1.414 "	33	0.8	0.264	0.805
" 1.414 on 1 "	16	0.7	0.112	0.341
" 1 mm.	20	0.7	0.140	0.427
Fine slimes	0			
				13.412
Grand total	1,000		32.810	100.025

all particles estimated to have less than 5% of concentrates in them being put with the tailings. This hand picking will probably reach a fine limit at about 1 mm. The undersize of the 1-mm. screen can be concentrated on a vanning shovel, a vanning plaque or a gold miners' pan. The fine slimes will first be floated off, and saved either by the use of a dissolved substance (see § 869), by filtering or by evaporating the water to dryness, to save the whole of the slimes. The vanning shovel will yield heads and tailings. Each of these products may then be weighed and assayed. The results may be tabulated as in Table 396, which is made up for the purpose of illustration upon the assumption that 1,000 grams of a copper ore had all been crushed to pass a 16-mm. screen and then sized on Rittinger's series of screens; the weights and assays are also assumed.

From this table we may draw the following conclusions:

(1) The ore assays 3.28% copper; and if the work has been carefully done this is a more accurate assay than any single assay could be.

(2) We have saved in the heads only 53.24% of the total original value.

(3) The coarse tailings are much too rich, and therefore the limiting size must be much smaller than 16 mm.

(4) 4 mm. appears to be a safe mill limiting size; that is, nothing should be allowed to go to waste larger than 4 mm.

(5) We can either work the sized products, as above indicated, by graded crushing and graded jigging using 16 mm. as the preliminary limit and 4 mm. as the final limiting size, or we can crush by graded crushing right down to 4 mm. and then size and jig.

(6) The fine slimes, though amounting to only 1% of the ore by weight, are rich enough to justify considerable care in saving them.

(7) Taking the net average of the 4-mm. and finer sizes, we may assume that the ore can probably yield tailings as low as 0.84% copper and heads as high as 8.11% copper; and we may add the following computations: let r=per cent. of metal in the mine ore; let t=per cent. of metal in the tailings; let h=per cent. of metal in the heads; let x=weight of tailings from 100 tons of original ore; and let 100—x=weight of heads from 100 tons of original ore. Then $x=\frac{100\ (h-r)}{h-t}$ and substituting the above figures for sake of example, we have $x=\frac{100(8.11-3.28)}{8.11-0.84}=\frac{483.0}{7.27}=66.44$ tons of tailings, and $100-x=33.56$ tons of heads. Thus the tests and subsequent speculation indicate that from 100 tons of ore containing 3.28% copper (=3.280 tons or 6,560 pounds of total copper) we might produce 33.56 tons of heads containing 8.11% copper (=2.722 tons or 5,444 pounds of copper), and 66.44 tons of tailings containing 0.84% copper (=0.558 tons or 1,116 pounds of copper), which shows a concentration in the heads of 83% of the total original copper.

Table 396 shows complete data, but the obtaining of such a lot of figures requires a large amount of work, and it is frequently advisable to shorten the steps. Table 397 shows results of an actual test in Mill 30 on the recrushing of jig middlings by the No. 4 rolls. The feed to the rolls was sampled, sized and each size picked into heads, middlings and tailings; the product of the rolls was treated in the same way. However, instead of assaying every product separately as indicated in Table 396, all the products of one kind, for example, all the heads products in the feed, were put together and one assay made of the lot. From Table 397 may be computed the total of the heads, middlings and tailings in the feed to the rolls, and similarly in the product of the rolls; a comparison of these two sets will show how much mineral has been freed by the crushing.

TABLE 397.—SIZING AND HAND PICKING TESTS IN MILL 30.

Size.	Feed to the Rolls.				Product of the Rolls.			
	Weight.	Percentage Composition as Selected by Hand.			Weight.	Percentage Composition as Selected by Hand.		
		Heads.	Middlings.	Tailings.		Heads.	Middlings.	Tailings.
	%	%	%	%	%	%	%	%
On 7 mm.	0.024				0			
Through 7 on 5 mm.	7.821	4.81	41.20	53.99	1.827	8.50	47.4	44.1
" 5 on 3 "	53.206	5.13	48.79	46.08	15.002	5.63	44.0	50.3
" 3 mm. on 8 mesh.	7.835	9.00	52.90	38.10	8.151	5.80	52.0	42.2
" 8 mesh on 10 "	11.775	7.70	56.10	36.20	7.211	9.10	55.0	35.9
" 10 " on 16 "	11.224	12.70	48.80	38.50	15.701	12.80	50.6	36.6
" 16 " on 20 "	5.298	26.20	38.70	35.10	22.644	18.60	39.9	41.5
" 20 " on 24 "	0.823	40.30	33.20	26.50	7.487	22.80	35.8	41.4
" 24 " on 30 "	1.934				7.336			
" 30 " on 40 "					4.482			
" 40 "					8.959			
Lead contents	11.1%	32.3%	12.2%	Trace.	11.2%	29.6%	8.1%	Trace.

§ 892. JIGGING TEST.—An ore that is to be jigged may be crushed by a breaker and rolls, either with or without graded crushing (see § 99), screened and classified, either with or without close sizing (see § 285 and § 462), and each product treated with suitable adjustments on a jig. In the case of small lots the finest sizes will be concentrated on a vanning shovel; with larger lots they will be treated on a table of the Wilfley type, on a vanner, on a glass table (see § 877) or on a canvas table. Each product should be weighed and assayed and the results tabulated as in § 891, to assist in drawing conclusions as to the best method of treatment.

FINE CONCENTRATION TEST.—An ore needing rather fine crushing and only a small reduction (perhaps 3 tons of ore into 2 tons of concentrates) has been successfully treated by the author in the following way: Crush by breaker and rolls to pass through a screen with 1-mm. square holes, send to a three-spigot classifier and treat on a Wilfley table. The ore contained finely disseminated pyrite (to be used for sulphuric acid manufacturers), a little chalcopyrite, and a quartz-feldspar-mica gangue. The first spigot product was clean pyrite. The second spigot, treated on the Wilfley table, yielded pyrite, chalcopyrite and gangue. The third and the overflow yielded the same. The fine slimes, being too rich in copper to throw away, were caught in a settling tank and treated as concentrates.

Canvas Tables and Steep End Shake Vanner.—If the Frue vanner or Wilfley table is to treat an ore in which the concentrates have a very high value ($50 or more per ton), the question of saving the extremely fine slimes, which these machines lose, rises to commercial importance. The vanner when well run saves all the coarser concentrates, but loses a considerable part of that which is finer than about one-tenth the diameter of the maximum size of grain. If the vanner tailings are treated in a classifier which will just lift the fine, rich grains and let the coarser waste go into the spigot, and the overflow be sent to a canvas table, and the heads of this sent to a little steep end shake vanner, a clean, rich concentrate will result; and figures on its quantity and richness and on the estimated cost of running will indicate whether or not this method will pay.

Some of the author's students obtained the following results by a test of this kind: Coarse vanner tailings, 0.10 ounce gold per ton; fine vanner tailings, 0.13 ounce gold per ton; canvas table heads, 0.6 ounce gold per ton; canvas table tailings, trace gold per ton; steep end shake vanner heads, 5.00 ounces gold per ton; steep end shake vanner tailings were too rich to throw away and were re-treated on a canvas table.

§ 893. FREE MILLING GOLD ORES may be treated in lots of 1,000 or 2,000

pounds with a breaker, a stamp battery with 225-pound stamps, a copper plate 2 feet wide and 6 feet long coated with silver amalgam, a mercury trap, a vanner and a little ball mill.

Table 398 shows the results of such a test made by students at the Massachusetts Institute of Technology. The ore used was from the Brookfield Mining Company of Nova Scotia, and contained its free gold in coarse condition. The ore was crushed in a Blake breaker to ¾-inch diameter, thoroughly mixed and divided into three lots by placing alternate shovelfuls on three separate piles. Table 398 is the results from the first lot. The stamp battery had a plate screen with slotted holes $\frac{1}{40}$ inch wide. The battery residue was panned, yielding amalgam (*a*) and gravel (*b*). The gravel (*b*) was ground in a sample grinder to $\frac{1}{40}$-inch diameter, amalgamated in a little ball mill, and then panned, yielding amalgam (*c*), concentrates (*d*) and tailings (*e*).* Amalgams (*a*) and (*c*) were united and, by retorting, yielded battery gold. The concentrates (*d*) and tailings (*e*) were included, by calculation, in the concentrates and tailings from the vanner. The material "unaccounted for" was assumed to assay the same as the fine vanner tailings.

TABLE 398.—TEST OF A FREE MILLING GOLD ORE.

	Weight of Product.	Gold per Ton.	Percent of Gold.	Weight of Gold.	Percent of the Total Gold.
	Kilos.	Ounces.		Grams.	
Ore fed	392	1.07	0.00367	14.3864	
Battery gold				16.0662	72.20
Plate gold				2.8146	12.63
Traps gold				0.0255	0.11
Vanner heads	15.36	2.78	0.00953	1.4638	6.57
Vanner coarse tailings	266.75	0.11	0.00088	1.0136	4.55
Vanner fine tailings	80.10	0.21	0.00072	0.5767	2.59
Gold in slag				0.0842	0.38
Unaccounted for	29.79	0.21	0.00072	0.2145	0.96
Total	392.00			22.2791	99.99

Percent of total gold saved by amalgamation..... 84.94%
Percent of total gold saved in concentrates..... 6.57

Total saving..... 91.51%
Fire assay of original ore..... 1.07 ounces gold per ton.
Assay calculated from mill results..... 1.66 ounces gold per ton.

A second section of the class obtained the following final figures from the second lot of this ore:

Percent of total gold saved by amalgamation..... 82.12%
Percent of total gold saved in concentrates..... 8.60

Total saving..... 90.72%
Fire assay of original ore..... 0.38 ounce gold per ton.
Assay calculated from mill results..... 1.72 ounces gold per ton.

A third section of the class obtained the following final figures from the third lot:

Percent of total gold saved by amalgamation..... 83.00%
Percent of total gold saved in concentrates..... 8.21

Total saving..... 91.21%
Fire assay of original ore..... 1.84 ounces gold per ton.
Assay calculated from mill results..... 1.50 ounces gold per ton.

These results well illustrate how difficult it is to sample and assay ores carrying very coarse gold; and how much more accurate is a mill test than a fire assay. Compare the results of mill tests (1.66 ounces, 1.72 ounces and 1.50 ounces gold per ton) with the corresponding fire assays of the original ore (1.07

* Though the pan is an excellent tool for recovering amalgam and free gold, it is not so good for saving concentrates; the vanning shovel is much better for that purpose. In the above test there was too much material to be handled conveniently on a shovel, but the little jerking table shown in Figs. 553*a*–553*d* is highly efficient in such a case.

ounces, 0.38 ounce and 1.84 ounces gold per ton). Fire assays of ores with coarse gold are more apt to give low than high results. In this case two are below and one is above the mill tests.

§ 894. METALLURGICAL TESTS.—Some ores of gold, silver or copper fail to give an economical result by concentration; and in such cases it may be wise to try lixiviation or pan amalgamation. Such methods, being in the domain of Metallurgy and foreign to Ore Dressing, are only briefly outlined here. Ores that are sufficiently rich as they come from the mine will, of course, go directly to the smelter.

Cyaniding Gold Ores.—Tests should be made on both raw and roasted ore, to determine how much lime or caustic alkali is needed to neutralize any acidity; also to determine the best size of ore, the best strength of solution and the consumption of cyanide. In small tests it is better to calculate the extraction from the assay of the original ore and of the tailings rather than to attempt to recover the gold from the solution. For full instructions as to cyanide tests the reader is referred to Furman's "Manual of Practical Assaying," fifth edition (1899), page 401.

Chlorinating Gold Ores.—A sample of the ore, crushed to 30 or 40 mesh, is thoroughly roasted in a small reverberatory or muffle furnace, moistened, saturated with chlorine gas in a tight jar or tank and left to the action of the chlorine for 24 hours, more or less. The chloride of gold is then leached out with water, and the tailings assayed to determine by comparison with the assay of the original ore, what percentage of gold has been extracted. Instead of using chlorine gas, the ore may be agitated with water, sulphuric acid and bleaching powder in a strong bottle which can be tightly sealed. For details see Aaron's "Leaching Gold and Silver Ores" (San Francisco, 1881) page 86; also Furman's "Manual of Practical Assaying," fifth edition, page 256.

§ 895. *Leaching Silver Ores with Hyposulphite.*—If a silver ore is roasted with salt, (with the addition of pyrite if the ore does not contain much sulphide) the silver may be extracted by leaching with hyposulphite of soda. For details see Stetefeldt's "Lixiviation of Silver Ores" (second edition, 1895) page 93; or Daggett's article in the *Am. Inst. Min. Eng.*, Vol. XVI., (1887-88), page 368.

Amalgamation of Silver Ores.—After chloridizing roasting, an ore may be treated with mercury in the little pan (see § 883), using the muller simply as a mixer, and, after treatment for 2 hours, more or less, may be panned to separate the amalgam from the tailings; the whole of the tailings must be saved even to the finest slimes. The assay of these tailings compared with the assay of the original raw ore, by suitable computation, gives the extraction of silver. The amalgam obtained is not as good a valuation since some amalgam may be left on the muller or some from a previous run scraped off and weighed.

A raw ore of silver, without previous chloridizing roasting, if it contains silver as sulphide, chloride, bromide, or in any other combination that can be decomposed and amalgamated by heated water, mercury, iron and chemicals, may be treated in the little pan, using a preliminary period of 4 hours, more or less, of heating and grinding with the chemicals, with the muller down, followed by one hour, more or less, with the muller up, of stirring the decomposed ore with mercury to amalgamate the silver. The resulting pulp can be panned for amalgam, and the whole of the tailings saved and extraction computed with the precaution spoken of above.

Leaching Copper Ores.—Copper sulphides and carbonates are not infrequently found in which the copper minerals are so intimately mixed with the gangue that a good extraction cannot be made by mechanical concentration. The carbonates may be dissolved by sulphuric acid if the ore does not contain limestone

or other substances which will consume too much acid. Sulphides may be dead roasted to convert them into oxides, and the copper extracted by acid; or they may be so roasted as to convert the copper into sulphate and the latter extracted by water, followed by dilute acid if necessary. If salt is added toward the end of the roast the copper may be converted into chloride, which is then extracted by water followed by dilute acid if found necessary. The copper is recovered from solution by precipitating on scrap iron; the recovery by precipitation by electricity using lead anodes is one of those processes that is still on trial.

§ 896. SMALL TESTS COMPARED WITH MILL WORK.—Let us see to what extent small tests can answer questions asked by the mill superintendent.

The Yield.—The small test can tell whether the mine ore will yield much or little concentrates, and whether they are rich or poor. Computation will, from the weight and assay, tell the dollars per ton that can be extracted.

Mill Design.—The small tests enable one to select the kind of machines required for the treatment and to determine approximately the number of them; hence they are a great help in mill design.

Errors.—A small test errs, as compared with mill work, in the fact that it is watched much more carefully than a mill can be. On the other hand there is a starting error while the machines are getting under way, and a stopping error while the machines are being stopped and cleaned up, both of which tend to lower the percentage of metal in the heads, and therefore count to a small extent against the small test. The mill hands are generally so well trained that the mill work should compare very well with small tests; but if the mill manager is forced to over-drive his machines or does not have them properly adjusted, the comparison will be in favor of the small test.

Efficiency of the Process.—The small test will show the percentage of the metal extracted, and whether one process is more efficient than another.

Cost of Treatment.—This depends upon cost of labor, power, supplies, interest, etc.; and the small test will help here only in so far as it points out the kind of a mill that is needed. The ore dresser must depend upon his experience for the rest. Assuming that he is able to estimate cost, then he is in a position to calculate whether or not a mill can be erected and run at a profit, taking into account the ore supply and the depreciation. He can also figure what size of mill will yield the largest net profit in the end.

REGULAR MILL TESTING.

§ 897. Tests of the work of the mill as a whole are made by determining each day the weight and value of the ore coming to the mill, of the concentrates saved, and of the tailings lost. All three of these determinations may be made separately or, in case the first is difficult to make, the last two may be determined and the first is calculated from these two. At Mills 65, 73, and 74 two samples are taken from every car of concentrates, holding 900 pounds, by a 15-inch cheese scoop sampler. A sample of final tailings is taken every three hours. The aggregate samples are assayed each day.

The following report by Pope Yeatman on Mill 15 will serve as an example of a mill test:

"The ore or 'wash dirt' was from the pump shaft and went through no preliminary treatment other than the customary 'culling.' It was a mixture of flint, spar, blende and mud, with flint largely predominating. The blende occurred coarsely disseminated in the flint and spar and none was in the form of 'pebble jack' or free ore. It was, however, crystalline. After crushing, the ore varied in size between ¾ inch and impalpable powder. The blende neither scaled or slimed badly, but broke in pieces more or less angular. Between 20 and

30% of the material failed to pass through openings of ½ inch diameter. This coarse size was in every case lower in zinc than any of the other sizes, the finer material the richer, which is to be expected, blende being far more friable than flint."

"Not being finely disseminated it was possible to crush 'coarse' and hence a greater saving could be made than had fine crushing been necessary. The losses in slime treatment and fine jigging are much greater than in the case of jigging coarse sizes."

"In taking samples great care was taken to ensure fair averages. Samples of from one to two quarts were taken of all the different materials every 15 or 20 minutes. In the case of the tailings it was necessary to take separate samples of coarse and slime tailings on account of the two materials discharging at different points. It was also necessary to assume a ratio between the coarse and slime tailings. After experimenting, by screening samples of ore and coarse and fine tailings, and arriving at the table sizes, the ratio of slime tailings to general tailings was estimated at 1 : 10, which is liberal."

TABLE 399.—RESULTS OF TESTS OF MILL 15.

	1	2	3	4	5
	Run of Sept. 19, 20.	Run of Nov. 11.	Run of Nov. 12.	Run of Dec. 19.	Run of Dec. 20.
Tons of "dirt" treated	61	81	80.25	35.90	36.75
" " " less 5% moisture	58.00	29.45	28.75	34.10	34.90
Percent zinc in "dirt"	18.84	13.93	11.24	11.16	11.44
" " coarse tailings	1.78	1.56	1.35	1.62	1.72
" " tailings from table and overflow	11.5	6.74	7.50	7.09	4.73
Percent tailings in "dirt"	75	81	84	84	84
" zinc in general tailings	2.75	2.06	1.97	2.17	2.22
" " tailings per ton of "dirt"	2.06	1.68	1.65	1.82	1.85
" loss per ton of "dirt" treated	10.9	12.1	14.7	16.3	16.10
" saving per ton of "dirt" treated	89.1	87.9	85.3	83.5	83.9

"In test No. 1, the table and overflow tailings are high. Changes were afterwards made with the table which reduced the loss. In No. 3 the value for table and overflow tailings was assumed, the sample having been lost; the value is probably too high. In tests 4 and 5 the weights are actual while in 1, 2, and 3 the weights are estimated."

"The following are assays of the different sizes of ore made in two of the trials."

	Run of Sept. 19, 20	Run of Dec. 19.		Run of Sept. 19, 20.	Run of Dec. 19.
Jig 1	64.48% zinc	61.86% zinc	Jig 4	64.47% zinc	62.71% zinc
" 2	64.92% "		" 4, hutch		63.51% "
" 3	64.76% "	63.73% "	" 5	62.42% "	62.92% "
3, hutch	65.20% "	64.12% "	Table 1	57.61% "	54.19% "
			" 2	48.97% "	

"In the run of Sept. 19, 20, the following percentages for different screenings were obtained:

	Percent of Total Weight.	Percent Zinc.		Percent of Total Weight	Percent Zinc.
Over ¼ inch	33.89	14.56	Through 10 mesh on 20 mesh	7.57	19.74
Through ¼ on ¼ inch	26.83	21.24	" 20 " on 40 "	1.63	19.93
¼ inch on 10 mesh	23.38	20.80	" 40 "	6.70	22.76

"The results are certainly very satisfactory. It might still be possible to reduce the losses in the slime treatment without increasing the cost of treatment much or lowering the grade of the finished product."

§ 898. Tests are made in the course of regular mill work to ascertain if the machines are doing as good work as may reasonably be expected of them; if they can be made to do better work, and if so how; and finally if their work is so poor as to suggest changing them for other machines.

Two methods at once present themselves: the rough and ready vanning shovel; and careful sampling followed by sizing test and assays. For the ordinary testing of machines the vanning shovel yields such quick results that it is to be most highly commended. On the other hand, at times it fails, and it is well to know under what circumstances this is true. On one occasion the author handed to one of the best of mill men, and most skilled in using the vanning shovel, a product the treatment of which had been a puzzle, and asked him to van it and tell how much native copper it contained. He vanned and vanned, and finally said "none." The author then ground the sample on a bucking board and again asked for the per cent. by the vanning shovel. The mill man quickly replied "12% or more." The sample when assayed yielded a fraction over 12% and showing how skilled and well practiced the mill man was; and yet in the first instance the vanning shovel broke down entirely in his hand. In another case a vanning shovel showed no separation when tried on a zinc product containing porous zincite and ashes, but after crushing this in a mortar a good separation was readily obtained.

The taking of samples which shall accurately represent what passes a given point in the mill in 24 hours, while it actually is taken in a number of short intervals amounting to only a few minutes altogether, is of the first importance for obtaining data on which computations can be based.

§ 899. Testing a Sizing Screen.—We desire to know whether a screen makes oversize free from undersize and undersize free from oversize; and if not, to what extent it errs. To test it we must take samples of both products, dry them and then make a sizing test of each (see § 293).

Testing a Classifier.—A single pocket of a classifier turns out a spigot product and an overflow. If doing its work properly no grains should go out of the spigot which belong in the overflow and conversely none should go off in the overflow which belong in the spigot; no classifier does perfect work, but some are much more nearly perfect than others. Most classifiers have four spigots, more or less, and therefore yield a series of four spigot products, more or less, and an overflow. They are less inclined to err by throwing too coarse grains into later spigots than by throwing too fine grains into earlier spigots. To test the work of a classifier careful samples of all its products should be taken and tests made in the one current classifier (see Fig. 544). They may each be subjected to the single current which the particular pocket should have, and by this they will yield spigot product and overflow showing how far they differ from a very perfect tool; or they may be subjected to a series of currents starting at a small current and going to larger by some definite multiplier and then the spigot products of all the different currents weighed and sized and photographed yield to computation and inspection a very perfect statement of the distribution of the minerals. For a similar statement in regard to hindered settling see § 467. Finally the several products may be simply sized, inspected or assayed, and weighed and the results tabulated (see § 352).

§ 900. Testing a Jig.—The jig should yield tailings free from concentrates, and hutch or discharge concentrates free from gangue. Practically neither of these results is obtained. Jig tailings will contain included grains consisting of part concentrates and part gangue, and may have thin flat grains of concentrates and also fine free grains of concentrates. The included grain can be saved only by finer crushing. The fine free concentrates may be due to poor screening (for

which the remedy is obvious), or they may be due to attrition of the mineral during jigging. Increased suction on the jig will tend to send these fines into the hutch. If however the included grains are present in such quantity as to require recrushing, then the fine free mineral will take care of itself and its consideration loses importance at this point. Very thin flat grains can be saved only by recrushing.

Jig Bed Inspection.—The usual mode of inspection of a jig bed is to pick up in the hand, by a peculiar movement, some of the bottom layer or of any intermediate layer, and so determine the condition of the jigging operation. If a horizontal bit of screen, wired around the edge to stiffen it, be provided with a vertical wire handle, it may be sunk edgewise down to the jig screen. If after the jigging has recovered from the disturbance so made, a glass lamp chimney is slowly lowered on the little screen and then the screen and chimney are lifted together, a complete section of jigging bed, visible to the eye, can be obtained and the operator can see if his bed is deeper than he wished or not deep enough, and how much of a middlings layer he has. On account of breaking of lamp chimneys, however, this is more of an occasional or show test than one for practical every day mill work. The skilled jig man can tell by his skimming where all the layers are with great accuracy.

A method and an instrument for studying the action of jigs is discussed in § 478.

§ 901. TESTING A FRUE VANNER.—Catch a set of samples across the tailing discharge and assay them separately. The two edges will be found richer than the rest. Catch a sample of the whole tailings from a launder, not from the tail roll. This will tell the true total loss incurred by the vanner. If either or both these tests show too great a loss, it may be caused by too hard driving or by too thick a bed upon the vanner. The former can be corrected only by adding more machines; the latter can be corrected at once, either by increasing the slope or by increasing the amount of feed water. The rate of travel will probably have to be increased at the same time, to prevent concentrates going into the tailings.

The testing of an Embrey or other end-shake vanner is the same, but it will not show as great discrepancy as the Frue between the center and the edges of the belt. The Embrey will probably be found to yield slightly cleaner tailings than the Frue, but on the other hand it puts more gangue into the concentrates.

If the whole tailings sample of either of the above machines be classified by the beaker settling test (see § 868) and the fine stuff separated from the coarse, the fine will generally assay richer than the coarse part, and there is this difference between them: The fine part contains free concentrates capable of being concentrated at once on canvas tables if they are rich enough and in quantity enough to pay. The coarse part on the other hand contains a few large grains that have gone by accident into the tailings, but its value in assay comes mainly from included and flattened grains neither of which are quite heavy enough to be saved in the heads and the values of which can be saved only by extremely fine crushing. The above test is important and may lead to a material addition to the saving made by the mill. A complete sizing test with assays computed in tabular form is also a very instructive test to make (see § 489).

§ 902. TESTING A WILFLEY OR OTHER JERKING TABLE.—It is quite as important here as with a vanner to subject a sample of tailings to the beaker settling test (see § 868). With an ore that produces rich concentrates, the finest material that goes into the tailings of a Wilfley table is very likely to have a high assay; and, if the quantity is sufficient, an attempt should be made to save it. In the case of Wilfley tables which have been added to Mill 27, the muddy

water which runs directly from the feed into the tailings is treated on canvas tables. The value recovered on the latter pays the whole cost of running the mill. In Mill 49 the muddy water from the Hallett tables goes to a box classifier, which has two spigots feeding two specially adjusted Hallett tables.

§ 903. TESTING SLIME TABLES.—To find out and locate the losses from a slime table, samples should be taken every foot or two around the circumference, beginning just beyond the heads blow off jet, and assayed. A little sampling trough (see Fig. 560) curved to fit the edge of the table, and provided with handles, is very convenient for this purpose. The first tailings sample is apt to be rich on account of a small quantity of concentrates which failed to be washed off. With proper care, however, this loss should be very small. The next two or three samples are likely to have the lowest assays of all, but beyond this the values will gradually increase, due mainly to the presence of included grains. The loss of these can be prevented only by finer crushing, which in most cases would not pay. Any concentrates that are too fine or too flat to settle will float off into the tailings all round the feed side of the table. If there is a serious loss in this way this material may be separated by finer classification than is commonly used and the values saved by canvas tables. The tailings samples near the middling-discharge contain a few of the largest particles of concentrates; and the values in the middlings are chiefly of this sort. The middlings assay will be considerably higher than the last tailings sample; and the concentrates will be practically clean mineral. Table 400 gives a test of a circular convex table treating a copper ore. The second column shows weights for 24 hours computed from the weights of the samples.

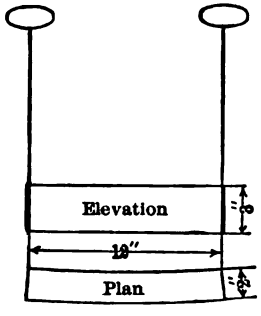

FIG. 560.—HAND SAMPLER FOR SLIME TABLES.

TABLE 400.—TEST OF PRODUCTS FROM A CIRCULAR CONVEX SLIME TABLE.

	Sample No.	Weight, Pounds in 24 Hours.	Assay, Percent Copper.	Weight of Copper, Pounds.	Percent of the Total Copper.
Tailings	1	360	0.58	2.088	0.49
"	2	692	0.47	3.252	0.76
"	3	972	0.52	5.054	1.19
"	4	1,217	0.44	5.355	1.26
"	5	1,944	0.47	9.137	2.15
"	6	2,606	0.50	13.030	3.07
"	7	3,031	0.64	19.398	4.56
"	8	2,520	0.70	17.640	4.15
"	9	1,375	0.60	8.250	1.94
"	10	1,872	0.61	11.419	2.69
"	11	1,541	0.63	9.798	2.28
"	12	936	0.92	8.611	2.03
"	13	886	1.14	10.100	2.38
"	14	896	1.16	10.278	2.42
Middlings	15	893	2.48	22.146	5.21
Heads	16	1,508	17.88	269.630	63.43
Total				425.096	100.01

§ 904. TESTING OTHER MACHINES.—The key for the solution of most ore dressing problems will be found in the close sizing test or in the sorting test in a hydraulic classifier or beaker, followed in either case by the weighing and assaying of the different products and tabulating the results. Having this information the ore dresser must depend on his own wits to improve his process. To aid him in making comparative tests of two machines the conditions should be made exactly alike for both and no favor should be shown to either. To aid the ore dresser, as suggestions in making improvements, the author has placed in Chapter XX. the outlines of nearly one hundred mills, showing the methods which others have employed in overcoming their difficulties.

BIBLIOGRAPHY FOR CHAPTERS XX. AND XXI. AND THE APPENDIX.

NOTE.—Further references on gold stamp mills may be found at the end of Chapter V., and on magnetic and pneumatic mills at the end of Chapter XVIII. For many figures on costs the reader is referred to the annual reports of the mining companies, a great many of which are published in the *Eng. and Min. Journal*, but only a few of which are referred to in this bibliography.

1. Aaron, C. H., (1881), "Leaching Gold and Silver Ores," p. 86. Method of testing gold ore by chlorination.
2. Adams, W. J., (1899), "Amalgamation," p. 89. Tests to be made in gold stamp mills.
3. Bilharz, O., (1896), "Mech. Aufbereitung," Vol. I. Mill schemes and general milling ideas.
4. Bowie, A. J., (1885), "Hydraulic Mining."
5. Callon, J., (1886), "Mining," Vol. III., p. 118. Mill schemes.
6. Charleton, A. G., "Charleton's Cost Sheet Forms." Blank forms for accounts and reports.
7. *Ibid.*, (1884), "Tin Mining," p. 12. Scheme of dressing tin ore at Altenberg, Saxony.
8. Clark, D. K., (1891), "Manual for Mech. Eng." Tables and data on mechanical subjects.
9. Dana, E. S., (1898), "System of Mineralogy." Minerals and their properties.
10. Davies, D. C., (1886), "Metal. Min. & Mining," p. 375. Hydraulicking operations. Various figures on costs of dressing different ores.
11. Davies, E. H., (1894), "Mach. Metal. Mines." Mill schemes. General ideas on milling.
12. Dummler, K., (1899), "Handbuch der Ziegel Fabrikation," Part II. The crushing and washing of clays.
13. Egleston, T., (1887 and 1890), "Metallurgy," Vols. I. and II. Gold stamp mills. Silver leaching and amalgamating mills. Hydraulicking.
14. Eissler, M., (1896), "Metallurgy Gold." Gold stamp milling.
15. *Ibid.*, (1891), "Metallurgy Silver." Mills for amalgamating and for leaching silver ores.
16. Evans, G. H., (1898), "Notes on Hydraulic Mining."
17. Ferrand, Paul, (1894), "L'Or a Minas Geraes," Vol. II. Description of the process of amalgamation and concentration of gold ore at Ouro Preto, Brazil.
18. Foster, C. Le N., (1894), "Ore and Stone Mining," p. 618. Processes used for dressing various substances.
19. Furman, H. Van F., (1899), "Assaying," p. 401. Cyanide tests for gold ores. p. 417. Amalgamation and concentration tests for gold and silver ores.
20. Gaetzschmann, M. F., (1872) "Aufbereitung," Vol. II., p. 581. General milling ideas.
21. Goupillière, Haton de la, (1885), "Exploitation des Mines," Vol. II., p. 857. Schemes of dressing.
22. Hatch, F. H. and Chalmers, J. A., (1895), "Gold Mines of the Rand," p. 181. Description of the gold stamp mills in South Africa and results obtained.
23. Hunt, R., (1884), "British Mining," p. 687. Short history of development of ore dressing. Losses. General milling ideas. Scheme of dressing in Cornwall.
24. Hurst, Geo. H., (1896), "Painters Colours," pp. 74, 89, 142. Method of washing barite, clay and ochre.
25. Kent, Wm., (1895), "Mech. Eng. Pocketbook." Tables and data on all kinds of mechanical subjects such as power, belting, lubrication, etc.
26. King, Clarence, (1870), "Geol. Exp. 40th Parallel," pp. 193, 349. Amalgamation of silver ores by the Washoe process, and by the Reese River process.
27. Kirschner, L., (1899), "Erzaufbereitung," Part II., p. 143. Schemes of gold mills in Europe.
28. Kunhardt, W. B., (1893), "Ore Dressing." General milling ideas.
29. Linkenbach, C., (1887), "Aufbereitung der Erze," p. 131. Mill schemes and general ideas on milling.
30. Lock, A. G., (1882), "Gold." The recovery of gold from sands and from vein rock.
31. Lock, C. G. W., (1901), "Gold Milling." The stamping, amalgamating and concentrating process for gold ores.
32. Longridge, C. C., (1902), "Hydraulic Mining."
33. Louis, H., (1894), "Gold Milling." The stamping, amalgamating and concentrating process for gold ores.
34. Luquer, L. M., (1898), "Minerals in Rock Sections," p. 96. Separation of minerals by heavy solutions.
35. McDermott, W. and Duffield, P. W., (1890), "Gold Amalgamation." Losses in the process and suggested remedies.

36. McDonald, B., (1897), "Skeleton Mining Report," p. 32. Data on the weight of a cubic foot of ore before and after crushing.
37. Neubert, E. W. and Bilharz, O., "Freibergs Berg. u. Hüttenwesen," (1883), p. 168; (1893), pp. 192, 209. Scheme of dressing at Freiberg, Saxony, and the results obtained.
38. Phillips, J. A., (1887), "Metallurgy," p. 683. The amalgamation processes for silver ores.
39. Rickard, T. A., (1897), "Stamp Milling." This is a summary of all the articles by this author which appeared in the *Eng. & Min. Journal*, (*q. v.*).
40. Rittinger, P. R. von, (1867), "Aufbereitungskunde," p. 513. Mill schemes and general milling ideas.
41. *Ibid.*, (1870), "Erster Nachtrag," p. 75. Mill schemes and general milling ideas.
42. *Ibid.*, (1873), "Zweiter Nachtrag," p. 82. Mill schemes.
43. Rose, T. K., (1894), "Gold." The recovery of gold from placers and from vein rock.
44. Schnabel, Carl, (1896), "Handbuch der Metalhüttenkunde," (translated by Louis, 1898), Vol. I., pp. 647, 696. Amalgamation of silver ores by the Washoe process and the Reese River process.
45. Smith, Oberlin, (1896), "Press Working of Metals," p. 103. Various gauges for wire and plate.
46. Stahl, A. W., (1893), "Transmission of Power by Wire Ropes."
47. Stetefeldt, C. A., (1895), "Lixiviation," p. 92. Testing of a silver ore by leaching with hyposulphite.
48. Terry, G., (1893), "Pigments," p. 173. The washing of china clay.
49. Trautwine, J. C., Jr., (1895), "Civ. Eng. Pocketbook." Tables and data on all kinds of civil engineering subjects, including hydraulics.
50. Unwin, W. C., (1894), "Development and Transmission of Power."
51. Weisbach, P. J., (1877), "Mechanics of Eng.," Vol. II. A full account of the use of water for power, and of water motors.
52. Wiley, H. W., (1894), "Principle and Practice of Agricultural Analysis," Vol. I., pp. 171, 185, 268. Discussion of sedimentation by means of dissolved substances. Various methods of settling in water. Preparation of several solutions of high specific gravity for use in separating minerals.
53. Zirkler, H., (1895), in "Berg. u. Hüttenwesen des Oberharzes," p. 205. Schemes of several German mills.

---

54. *Ala. Ind. & Sci. Soc.*, Vol. VI., Part II., (1896), p. 67. J. Franklin. Description of stamp and Huntington mill plant at the Idaho mine, Alabama.
55. *Am. Inst. Min. Eng.*, Vol. V., (1877), p. 584. C. M. Rolker. Outline of Allouez mill at Lake Superior and variations shown by other mills, with figures on labor, losses, capacity, cost, and water used.
56. *Ibid.*, Vol. VI., (1877), pp. 276, 300-312. T. Egleston. Percentage of copper in the rock at Lake Superior. Detailed costs of mining and milling at the Allouez and the Atlantic mines. Value of ore and products.
57. *Ibid.*, p. 470. J. C. F. Randolph. A full description of the plan, equipment, and method of dressing at Clausthal, with economical results obtained.
58. *Ibid.*, Vol. VIII., (1880), p. 409. H. S. Munroe. Discussion of the losses in milling at Lake Superior, the amount, the cause, the remedy.
59. *Ibid.*, p. 551. R. P. Rothwell. Outline of the Ontario, Silver Reef and California silver mills in Nevada, and cost of milling.
60. *Ibid.*, Vol. IX., (1880), p. 32. C. M. Rolker. The cost of mining and stamp milling in the silver sandstone district of Utah.
61. *Ibid.*, (1881), p. 320. R. H. Richards. Description of a small testing jig with glass sides.
62. *Ibid.*, p. 420. Ellis Clark, Jr. Description of the various ore dressing works at Przibram, Bohemia.
63. *Ibid.*, p. 646. T. Egleston. Causes of non-amalgamation and loss of rusty gold.
64. *Ibid.*, Vol. X., (1881), p. 87. A. J. Bowie, Jr. Details of construction and of cost of the Father de Smet gold stamp mill, South Dakota.
65. *Ibid.*, (1882), p. 293. J. C. F. Randolph. Description of a stamping and pan amalgamation plant for a silver ore at Batopilas, Chihuahua, Mexico.
66. *Ibid.*, Vol. XI., (1882), p. 29. A. W. Rogers. Discussion of the Colorado system of stamp milling as compared to the California system.
67. *Ibid.*, p. 91. W. L. Austin. Description of the mills and process, with costs of milling, at Harshaw and Charleston silver mills, Arizona.
68. *Ibid.*, Vol. XIII., (1884), p. 35. A. F. Wendt. Description of crushing and jigging plant for iron ore at Crown Point mines, New York.
69. *Ibid.*, (1885), p. 659. W. I. Pierce. Figures on cost of gold milling in Nova Scotia.

70. *Ibid.*, p. 679. W. McDermott. Results of concentration and pan amalgamation of a low grade silver ore.
71. *Ibid.*, Vol. XV., (1887), p. 601. J. A. Church. Description of mill at Tombstone, Arizona, for concentrating the tailings from pan amalgamation of silver ores, and results obtained.
72. *Ibid.*, Vol. XVI., (1887), p. 38. W. P. Blake. Discussion of the profit in silver milling at Butte, Montana.
73. *Ibid.*, p. 190. J. Birkinbine. Cost of milling Lake Superior native copper ores.
74. *Ibid.*, pp. 368, 486. E. Daggett. Details of the testing of silver ores by the Russell leaching process. Comparison of results obtained by amalgamation and by the Russell leaching process for silver ores.
75. *Ibid.*, p. 609. F. S. Ruttmann. Outline of crushing and jigging plant for magnetite at Lyon Mountain, New York.
76. *Ibid.*, p. 753. T. A. Blake. Outline of plant at the Haile Gold Mine, North Carolina, and the Chateaugay Ore and Iron Company, New York, with costs of milling.
77. *Ibid.*, Vol. XVII., (1889), p. 498. H. O. Hofman. General article on gold stamp mills in the Black Hills, South Dakota, with results obtained.
78. *Ibid.*, p. 603. R. A. Cook. Outline of a magnetic plant at Dannemora, Sweden.
79. *Ibid.*, p. 659. H. S. Munroe. Description of the St. Joseph Lead Company's mill, at Bonne Terre, Missouri, with results obtained and costs of treatment.
80. *Ibid.*, p. 728. J. Birkinbine. General article on the methods of concentrating iron ores with special reference to the results obtained by magnetic concentration.
81. *Ibid.*, Vol. XVIII., (1889), p. 242. C. W. Goodale. Results obtained and costs in a combination silver mill at Black Pine, Montana.
82. *Ibid*, p. 263. J. M. Desloge. Outline of the Desloge mill for lead ores in Missouri.
83. *Ibid.*, p. 391. S. F. Emmons. A few notes on gold stamp mills in Maryland.
84. *Ibid.*, p. 439. F. C. Smith. Poor results from stamping, amalgamating and concentrating a telluride ore.
85. *Ibid.*, Vol. XIX., (1890), p. 62. J. C. Fowle. Description of the magnetic plant at the Michigamme mine, Lake Superior, and results obtained.
86. *Ibid.*, p. 71. F. H. McDowell. Description of the Tilly Foster magnetic plant, New York, with results obtained and costs.
87. *Ibid.*, p. 193. C. M. Ball. Results of tests with the Ball-Norton electromagnetic separator.
88. *Ibid.*, p. 195. A. D. Hodges, Jr. History of silver milling on Comstock lode.
89. *Ibid.*, p. 289. Clemens Jones. Figures on the cost of roasting and magnetic separation of iron ores.
90. *Ibid.*, p. 606. A. Thies and W. B. Phillips. Description of gold stamp mill at the Haile Gold mine, North Carolina.
91. *Ibid.*, p. 656. J. Birkinbine. Short summary of several magnetic plants and discussion of the existing condition of magnetic concentration.
92. *Ibid.*, Vol. XX., (1891), p. 160. R. W. Raymond. Discussion of need of careful sampling in testing mills.
93. *Ibid.*, p. 575. Various people. Discussion of the question of magnetic concentration, and separation by use of heavy solutions.
94. *Ibid.*, p. 602. W. H. Hoffman. Cost of magnetic concentration at the Croton mines, New York.
95. *Ibid.*, Vol. XXI., (1892), p. 20. C. Henrich. Description and criticism of the blende dressing methods at Webb City, Missouri.
96. *Ibid.*, p. 548. J. Birkinbine. Details of the cost of milling at the Atlantic mill, Lake Superior.
97. *Ibid.*, Vol. XXII., (1893), pp. 225, 699. O. Bilharz. Discussion of Rittinger's principles of ore dressing and of the arrangement of mills.
98. *Ibid.*, pp. 321, 647. Jas. Douglas. Discussion of American improvements in ore dressing.
99. *Ibid.*, Vol. XXIII., (1893), pp. 137, 545. T. A. Rickard. Discussion of the Colorado *versus* the California system of stamp milling.
100. *Ibid.*, Vol. XXIV., (1894), p. 34. G. R. Johnson. Results obtained in washing iron ore with a log washer at Longdale, Virginia.
101. *Ibid.*, pp. 208-220. E. R. Abadie. Description of the North Star gold stamp mill at Grass Valley, California, with results obtained and costs.
102. *Ibid.*, p. 409. R. H. Richards. Description of testing sieves, testing classifier, pulsion-jig and movable-sieve jig.
103. *Ibid.*, p. 486. P. G. Lidner. The condition of ore dressing in Sweden and description of a few plants.
104. *Ibid.*, Vol. XXV., (1895), p. 130. W. S. Morse. Short description of an Arizona gold stamp mill with weights and assays of products.

105. *Ibid.*, p. 399. W. B. Phillips. Some figures on the cost of roasting and magnetic separation of iron ore.
106. *Ibid.*, p. 551. H. S. Chase. Some figures on the cost of magnetic separation of Cranberry magnetite in North Carolina.
107. *Ibid.*, p. 538. C. M. Ball. Equations for calculating the efficiency of concentration when various data are known.
108. *Ibid.*, p. 902. J. V. Lewis. Description of the cleaning and dressing of corundum at Corundum Hill, North Carolina, followed by a list of the literature on the subject.
109. *Ibid.*, p. 908. T. A. Rickard. Comparison of stamp mill practice in the Black Hills, South Dakota, and at Grass Valley, California, with regard to location and number of stamps, comparison of typical mills, consumption of mercury, labor costs, and total cost of milling.
110. *Ibid.*, Vol. XXVI., (1896), p. 3. R. H. Richards. Description of an apparatus for testing a jig in operation.
111. *Ibid.*, p. 449. J. A. Porter. Details of the gold stamp mill at the Smuggler Union Mine, Telluride, Colorado. Gives assays, sizing tests, and shows large resultant loss in gold and silver.
112. *Ibid.*, p. 599. C. W. Goodale. An article on the concentration of ores at Butte, Montana, giving analysis of ores treated, full outlines of the mill schemes at the different plants, figures showing losses in jig tailings, costs of milling, comparative work of Frue vanners and circular tables, and results of the classification of slimes for vanner treatment.
113. *Ibid.*, Vol. XXVII., (1897), p. 76. R. H. Richards. Gives description of a small glass tubular classifier and a rectangular glass slime table for testing.
114. *Ibid.*, Vol. XXVIII., (1898), p. 553. W. J. Loring. A very detailed description of the gold stamp mill practice at the Utica Mills, Calaveras County, California. Gives water used and cost of milling.
115. *Ibid.*, Vol. XXX., (1900), p. 421. T. M. Chatard and Cabell Whitehead. The effect of first acidifying and then making alkaline on the settling of slimes from the ores of the Republic Gold Mine, Washington.
116. *Am. Mfr.*, Vol. LV., p. 406. The dressing of iron ore in Spain.
117. *Ibid.*, Vol. LVI., p. 477. The ore testing plant of the University of Minnesota.
118. *Ibid.*, May 1, (1893), p. 357. Wet concentration of iron ores.
119. *Ibid.*, July 20, (1894), p. 87. Preparation of iron ore in Spain.
120. *Ibid.*, Feb. 16, (1894), p. 232. The concentration of Alabama iron ores.
121. *Ibid.*, Mar. 23, (1894), p. 403. Concentration of Lake Superior copper ores.
122. *Ibid.*, Aug. 31, (1894), p. 303. Material handled to obtain iron ore.
123. *Ibid.*, Nov. 2, (1894), p. 632. Preparation of spathic iron ores.
124. *Am. Soc. Mech. Eng.*, Vol. XV., (1894), p. 204. F. W. Taylor. Article on belts discussing the cost, life, best methods of splicing, etc. Results of tests.
125. *Ann. f. Gewerbe u. Bauwesen*, Vol. XXXVII., (1895), p. 43. E. Faber. The washing of graphite for lead pencils.
126. *Ann. des Mines*, Series VI., Vol. XIX., (1871), p. 294. A. Henry. Long article on dressing lead and zinc ores in Belgium and the Rhenish provinces. Discussion of arrangement of mills. Description of mills at Welkenraedt, Steinenbruck, Mechernich and Silberau.
127. *Ibid.*, Series VII., Vol. II., (1872), p. 271. A. Henry. Description of ore dressing plant at Przibram with figures on labor and results obtained.
128. *Ibid.*, Vol. VI., (1874), p. 8. P. L. Burthe. Description of the processes of wet and dry silver milling in the United States and results obtained.
129. *Ibid.*, Vol. XI., (1877), p. 261. Mr. Opperman. Description of the treatment of zinc ores at Ammeberg, Sweden.
130. *Ibid.*, Vol. XIV., (1878), p. 209. Mr. Carcanagues. Description of method of tin dressing in Cornwall.
131. *Ibid.*, Series VIII., Vol. XIX., (1891), p. 1. J. Thoulet. Theories of settling in water and results of some experiments. Statement of the influence of temperature, the quantity of material in suspension, and the addition of hydrochloric acid and of brine.
132. *Ibid.*, Vol. XX., (1891), p. 1. M. Bellom. General article on ore dressing in Saxony, the Harz and Rhenish Prussia with descriptions of several mills.
133. *Austr. Inst. Min. Eng.*, Vol. V., (1898), p. 81. Henry Rosales. Descriptive outline of the treatment for auriferous quartz in Victoria. It includes stamp mill and apparatus for treatment of slimes.
134. *Austr. Min. Standard*, Nov. 30, (1895), p. 643. No author. Notes on the location and construction of mills.
135. *Berg. u. Hütt. Jahrb.*, Vol. XXVI., (1878), p. 177. J. Habermann. Description of the proposed crushing plant to replace stamps at Przibram.

136. *Ibid.*, Vol. XXVII., (1879), p. 96. J. Habermann. Description of proposed concentration mill for lead ores at Przibram with figures on capacity, power, cost, and products.
137. *Ibid.*, Vol. XXVIII., (1880), p. 213. J. Habermann. Description of a concentrating plant with graded crushing.
138. *Ibid.*, Vol. XXX., (1882), p. 14. J. Habermann. Description of the Stefan washing, crushing, and stamp mill in Przibram with figures on water and power.
139. *Ibid.*, Vol. XXXI., (1883), p. 137. K. V. Reytt. Discussion of the relative merits of the various machines in mills.
140. *Ibid.*, Vol. XXXIII., (1885), p. 148. J. Habermann. Description of the ore dressing plant at Raibl with power and water required.
141. *Ibid.*, Vol. XXXIV., (1886), p. 284. J. Habermann. Outline of the trommel and jig plant at the Anna mill in Przibram.
142. *Ibid.*, Vol. XXXVII., (1889), p. 95. A. Pallausch. Notes on graphite dressing in southern Bohemia.
143. *Ibid.*, Vol. XLVI., (1898), p. 357. C. Blömeke. Discussion of the progress in ore dressing. Contains outlines of the mills at Silberau, Laurenburg and Clausthal with discussion and figures with regard to power and cost. Discussion of dry and wet dressing, magnetic dressing and the dressing of gold ores.
144. *Berg. u. Hütt. Zeit.*, Vol. XXIII., (1864), p. 361. R. Geyer. Description of plant for concentrating lead and silver ores at Silberau near Bad-Ems in Prussia.
145. *Ibid.*, Vol. XXIX., (1870), pp. 117, 159, 167, 201, 227. E. Heberle. Description of ore dressing works at Falun, Sweden, and results obtained.
146. *Ibid.*, pp. 305, 365, 395. A. Reichenecker. Results of dressing gold ores in Colorado and costs.
147. *Ibid.*, Vol. XXXI., (1872), pp. 73, 101, 117, 136. Vol. XXXII., (1873), p. 126. C. Blömeke. Details of some of the apparatus in several German mills.
148. *Ibid.*, Vol. XXXI., (1872), pp. 145, 169, 239. Vol. XXXII., (1873), pp. 112, 156, 165. M. G. Clerc. General theory of separation with especial reference to the different methods of jigging.
149. *Ibid.*, Vol. XXXI., (1872), pp. 357, 373, 408, 421, 436, 445. E. Heberle. Full description of new ore dressing works at Falun, Sweden, giving also the labor required and results obtained.
150. *Ibid.*, Vol. XXXIII., (1874), pp. 399, 409. C. Blömeke. Description of new plant for concentrating lead and zinc ores at the Perm mine in Westphalia.
151. *Ibid.*, Vol. XXXIV., (1875), p. 365. C. Blömeke. Description of a proposed plant for concentrating zinc and lead ores using a flat site.
152. *Ibid.*, Vol. XXXVII., (1878), p. 217. O. Lattes. A very brief description of the ore dressing works at Przibram, Bohemia, giving the capacity, power, cost, and analyses of products.
153. *Ibid.*, Vol. XLI., (1882), pp. 29, 37, 49. C. Blömeke. Description of ore dressing works at Clausthal and results obtained.
154. *Ibid.*, p. 141. C. Blömeke. Description of ore dressing works at Laurenburg in Prussia.
155. *Ibid.*, p. 217. C. Blömeke. Description of ore dressing works at Lintorf.
156. *Ibid.*, pp. 289, 336, 345. C. Blömeke. Description of ore dressing plant at Bad-Ems in Prussia.
157. *Ibid.*, Vol. XLIV., (1885), p. 4. E. Koch. Description of the Gottesgabe and Hammerwäsche mills in Westphalia, with capacities.
158. *Ibid.*, pp. 137, 145, 157. C. Blömeke. Discussion of the treatment of slimes and results obtained at the Himmelfürst-Fund mine at Przibram.
159. *Ibid.*, p. 503. C. Blömeke. Description of ore dressing plant at Beuthen in upper Silesia, and results obtained.
160. *Ibid.*, Vol. XLVIII., (1889), p. 77. C. Wagemann. Description of concentration plant for tin ore at Ploermel, France.
161. *Ibid.*, Vol. XLIX., (1890), p. 269. Th. Andrée. Short note on the dressing of graphite in Austria and Bavaria.
162. *Ibid.*, p. 423. H. Wedding. Description of a dry concentrating mill for Thomas slag.
163. *Ibid.*, Vol. L., (1891), p. 229. C. Blömeke. Description of the Himmelfahrt ore dressing plant at Freiberg, Saxony.
164. *Ibid.*, Vol. LIII., (1894), pp. 142, 167. C. Blömeke. Description of the Dörnberg and Aurora concentrating plant at Ramsbeck in Westphalia with results obtained.
165. *Ibid.*, Vol. LIV., (1895), p. 373. R. Rosenlecher. Description of the method of dressing quicksilver ores in Tuscany by use of trommel, hand jig, hand picking and tie.
166. *Ibid.*, Vol. LVI., (1897), p. 366. B. Knochenhauer. Figures on costs, losses and labor required in California gold mills.

167. *Bull. Soc. Ind. Min.*, Series II., Vol. XIV., (1885), p. 899. Mr. Simonnet and Mr. Chaumeis. General description of the American gold stamp milling system with results.
168. *Ibid.*, Series III., Vol. IV., (1890), p. 915. Mr. Gayet. Description of treatment of argentiferous galena ores at the mill at Villefort, Lozere, France.
169. *Ibid.*, Vol. VII., (1893), pp. 465-485. G. Gromier. Description of the process of treating spathic iron ore at Allevard, France, by roasting, jigging and magnetic treatment.
170. *Ibid.*, Vol. VIII., (1894), p. 527. Ch. Mouchet. Description of the Vaucron, Var, France, mill for galena blende ores with results obtained.
171. *Cal. Bull.*, (1895), No. 6. E. B. Preston. A few notes on the construction and running of mills; outline of several California gold stamp mills and specifications for a 40-stamp gold mill; the testing of a gold mill.
172. *Ibid.*, (1900), No. 18. W. H. Storms. Brief description of several California gold mills.
173. *Cal. Rep.*, Vol. VIII., (1888), p. 696. J. H. Hammond. Costs of gold stamp milling and specifications for a 40-stamp gold mill.

Many figures on cost of gold stamp milling will be found scattered through the different volumes of the *Cal. Rep.*

174. *Can. Min. Inst.*, Vol. I., Part I., (1896), p. 21. F. Hille. Discussion of the losses in gold stamp mills and description of a proposed plant for decreasing the losses.
175. *Ibid.*, Vol. II., (1897), p. 273. H. N. Thompson. Description of the dressing of asbestos at Thetford, Quebec.
176. *Ibid.*, Vol. II., Part I., (1899), p. 28. A. C. McCallum. Discussion of rolls, crushers and mortars from the point of view of the designer.
177. *Ibid.*, Vol. III., (1900), p. 37. J. E. Hardman. Method of keeping accounts and reckoning costs, with various forms for illustration.
178. *Ibid.*, p. 102. F. T. Snyder. Discussion of original cost and resultant returns taking vanners as a specific case. Description of a modified micrometer gauge for measuring ore grains.
179. *Ibid.*, Vol. IV., (1901), p. 254. W. M. Edwards. Description of the Helena and Frisco mill in Idaho.
180. *Can. Min. Rev.*, Vol. XIV., (1895), p. 169. F. Hille. Discussion of the losses in concentrating zinc lead sulphides.
181. *Ibid.*, p. 182. Same as *Am. Inst. Min. Eng.*, Vol. XXV., p. 130.
182. *Ibid.*, Vol. XV., (1896), p. 37. No author. Short description of the Lake Harold gold stamp mill in the Rainy River district, Ontario.
183. *Ibid.*, Vol. XVI., (1897), p. 126. H. N. Thompson. Same as *Can. Min. Inst.*, Vol. II., (1897), p. 273.
184. *Ibid.*, Vol. XVII., (1898), p. 270. H. A. Guess. Comparison of the results obtained by a laboratory amalgamator with those obtained in actual milling, showing a close agreement between the two.
185. *Ibid.*, Vol. XX., (1901), p. 176. J. B. Jaquet. Hydraulicking with a centrifugal pump in New South Wales.
186. *Cassier's Mag.*, Vol. XIV., (1898), p. 391. T. H. Leggett. Description of the process of diamond washing in South Africa.
187. *Charcoal Iron Workers*, Vol. IV., (1893), p. 324. C. G. Buchanan. Description of a magnetic concentration plant.
188. *Chem. & Met. Soc. S. Africa, Jour.*, Vol. I., April, (1898), p. 43. J. A. Wilkes. Discussion of a gold stamp mill for testing with precautions to be observed in its use.
189. *Ibid.*, p. 52. No author. Effect of lime and caustic soda in settling slimes.
190. *Ibid.*, July, (1898), p. 96. W. A. Caldecott. J. T. Carrick. Aug., p. 115. W. A. Caldecott. Percentage of lime used for settling slimes in South Africa.
191. *Ibid.*, Sept., p. 131. A. Prister. Discussion of slime settling with influence of addition of hydrochloric acid, and salts, and the effect of pressure, etc.
192. *Chem. Soc. Trans., London*, Vol. LXI., (1892), p. 160. H. Pictou and S. E. Linder. Experiments and results obtained by immersing electrodes connected with a storage battery in diffusible arsenic sulphide solution.
193. *Ibid.*, Vol. LXVII., (1895), p. 63. S. E. Linder and H. Pictou. Discussion and table of coagulative powers of metallic salts on arsenious sulphide and other solutions.
194. *Clay Worker*, Vol. XXV., (1896), p. 145. F. Lehman. Description of the washing of clays at Chicago. Outline of slumming plant with cost of installation.
195. *Coll. Eng.*, Vol. XVII., (1896), p. 62. H. K. Landis. Description of mills for dressing zinc ores at Friedensville, Pennsylvania, with results obtained.
196. *Ibid.*, p. 249. J. V. Schaefer. Description of Alexandria Coal Company's plant for washing coal before coking, at Greensburg, Pennsylvania.

197. *Ibid.*, p. 309. H. K. Landis. Description of blende mills in Southwest Missouri and results obtained.
198. *Ibid.*, p. 346. H. Van F. Furman. Description of the testing for losses in gold amalgamation.
199. *Ibid.*, p. 356. Epitome of *Am. Inst. Min. Eng.*, Vol. XXV., p. 906.
200. *Ibid.*, Vol. XVIII., (1897), p. 26. H. Van F. Furman. Outline of the Morning mill at Mullan, Idaho, and of the Hecla Mill at Glendale, Montana.
201. *Coll. Guard.*, Vol. LXII., (1891), pp. 703, 749, 796. W. J. May. Discussion of the results obtained in concentrating iron ores by various processes.
202. *Ibid.*, Vol. LXVIII., (1894), p. 111. Abstract of *Inst. Civ. Eng.*, Vol. CXVI., p. 331.
203. *Ibid.*, p. 670. Abstract of *Am. Inst. Min. Eng.*, Vol. XXIV., p. 486.
204. *Ibid.*, Vol. LXX., (1895), p. 749. H. C. Cutter. Description of testing plant at the University of Minnesota, U. S. A.
205. *Ibid.*, Vol. LXXIV., (1897), p. 885. No author. Description of the magnetic concentration mill at Edison, New Jersey.
206. *Ibid.*, p. 1114. B. H. Brough. Description of magnetic concentration plants in Sweden.
207. *Col. Sci. Soc.*, Vol. V., (1894), p. 102. E. B. Kirby. Figures on the weight of various ores in place and after crushing.
208. *Ibid.*, Vol. VI., (1897), p. 66. H. A. Vezin. Advocating the use of an intermediary jig in mills.
209. *Comptes Rendus Soc. Ind. Min.*, (1895), p. 11. No author. An outline of a plant for concentrating zinc lead ores at Saint-Laurent-le-Minier, Gard, France, with figures in regard to dimensions and amount treated.
210. *Dingler's Polyt. Jour.*, Vol. CCLXXVIII., (1890), p. 405. No author. Short description of the ore-dressing plant at Freiberg, Saxony, with figures on power.
211. *Electrical Review.*, Vol. XXXI., (1897), p. 203. S. H. Goddard. Description of Edison's magnetic concentration plant in New Jersey.
212. *Engineering*, Vol. XXXII., (1881), p. 329. No author. Full description of the ore dressing works at Lintorf, Prussia. Illustrated, showing general arrangement and giving figures on capacity, power and dimensions.
213. *Ibid.*, Vol. LVI., (1893), p. 604. No author. Short note on Orion gold stamp mill near Johannesburg, South Africa, giving capacity. Illustrated, showing general arrangement.
214. *Ibid.*, Vol. LVIII., (1894), pp. 262, 294. No author. Full description of the mill for dressing zinc ore at Monteponi, Sardinia. Illustrated, showing general arrangement and also details of the washing apparatus. Figures on amount treated, products obtained and costs.
215. *Ibid.*, Vol. LIX., (1895), p. 405. No author. Short description of new method of diamond washing in South Africa. Illustrated, showing general arrangement.
216. *Ibid.*, Vol. LX., (1895), p. 633. No author. Description of the phosphate dressing plant near Mons, Belgium. Fully illustrated, showing general arrangement and details of machinery.
217. *Ibid.*, Vol. LXIV., (1897), p. 579. No author. Short description of magnetic concentration at Edison, New Jersey. Illustrated.
218. *Ibid.*, Vol. LXVII., (1899), pp. 503, 535, 642, 840. Vol. LXVIII., (1899), pp. 34, 192. C. C. Longridge. A very complete article on gold dredging in rivers.
219. *Eng. Mag.*, Vol. XI., (1896), p. 461. H. M. Chance. Some of the recent improvements in gold milling and discussion of the most profitable percentage of extraction.
220. *Ibid.*, Vol. XVIII., (1900), p. 697. W. H. Cutten. Gold dredging in New Zealand, with description of the Earnschleugh No. 2 dredge and results obtained.
221. *Ibid.*, Vol. XIX., (1900), p. 823. Thomas Tonge. A short note on mills for concentrating zinc ores from the dumps at Leadville, Colorado.
222. *Ibid.*, Vol. XX., (1901), p. 685. A. G. Charleton. An article discussing accounts and reports and giving various forms.
223. *Eng. & Min. Jour.*, Vol. XXV., (1878), p. 46. No author. Short note on the Ontario silver mill using stamps and amalgamating pans, at Park City, Utah.
224. *Ibid.*, pp. 113, 150, 168, 186, 204, 222. Same as *Am. Inst. Min. Eng.*, Vol. VI., p. 470.
225. *Ibid.*, Vol. XXXII., (1881), p. 251. F. A. Lowe. Stamp mill for treatment of low grade silver ores at Silver Islet Mill, Lake Superior, with costs and loss in the tailings.
226. *Ibid.*, Vol. XXXIII., (1882), p. 37. Same as *Am. Inst. Min. Eng.*, Vol. IX., p. 646.
227. *Ibid.*, Vol XXXIV, (1882), p. 306. No author. Short description and outline of the concentration works of the Hecla Consolidated Mining Company at Glendale, Montana, with figures on capacity of mill. Illustrated.
228. *Ibid.*, Vol. XXXV., (1883), p. 346. No author. Description of a blende concentrating plant at Galena, Kansas.

229. *Ibid.*, Vol. XLIII., (1887), pp. 274, 292. John A. Church. Description of a stamp and concentration mill for fine tailings at Tombstone, Arizona. Figures on amount treated, concentrates saved and costs.
230. *Ibid.*, Vol. XLV., (1888), p. 397. No author. Description of the Carlisle gold stamp mill in New Mexico.
231. *Ibid.*, p. 416. Same as *Am. Inst. Min. Eng.*, Vol. XVI., p. 609.
232. *Ibid.*, Vol. XLVI., (1888), p. 392. No author. Description of a concentrating mill for silver ores.
233. *Ibid.*, Vol. XLVII., (1889), p. 324. F. de Stowlinski. Description of the San Antonio de Yguana concentrating mill, Mexico.
234. *Ibid.*, pp. 566, 589. Same as *Am. Inst. Min. Eng.*, Vol. XVII., p. 659.
235. *Ibid.*, Vol. XLVIII., (1889), p. 118. C. H. Aaron. Discussion of the losses in gold milling.
236. *Ibid.*, Vol. L., (1890), p. 628. Abstract of *Am. Inst. Min. Eng.*, Vol. XIX., p. 62.
237. *Ibid.*, Vol. LII., (1891), p. 498. Cost of milling at the Atlantic native copper mill, Lake Superior.
238. *Ibid.*, p. 502. W. H. Hoffman. Description of magnetic concentration at the Croton magnetic iron mines, Brewster, New York.
239. *Ibid.*, p. 566. E. Ludlow. Form of report used by the Choctaw Coal and Railway Company.
240. *Ibid.*, p. 588. A. Sahlin. Short description of a magnetic concentration plant at Weldon, New Jersey.
241. *Ibid.*, Vol. LIII., (1892), p. 233. Similar to *Berg. u. Hütt. Zeit.*, Vol. L., p. 229.
242. *Ibid.*, p. 349. W. de L. Benedict. Washing South Carolina land phosphate by means of a log washer.
243. *Ibid.*, p. 616. A. Sahlin. Discussion of the value of magnetic concentrates.
244. *Ibid.*, p. 665. J. W. Meier. Notes on the ore dressing works at Przibram, Bohemia.
245. *Ibid.*, p. 667. O. F. Pfordte. Description of the concentration plant at Casapalca, Peru.
246. *Ibid.*, Vol. LIV., (1892), pp. 5, 28, 52. J. W. Meier. Notes on the ore dressing works at Przibram.
247. *Ibid.*, p. 102. No author. Description of concentrating plant at Harney Peak tin mines, South Dakota.
248. *Ibid.*, pp. 198, 222, 245. T. A. Rickard. Description of gold stamp mills in Gilpin County, Colorado. Discussion of the system used, costs, losses, and results obtained.
249. *Ibid.*, pp. 534, 558. T. A. Rickard. Description of gold stamp mills at Thames in New Zealand, giving losses and results obtained.
250. *Ibid.*, Vol. LV., (1893), p. 77. W. M. Brewer. Brief outline of log washer plant for iron ore in Alabama.
251. *Ibid.*, pp. 78, 101. T. A. Rickard. Description of gold stamp mills at Clunes, Victoria, with losses and results obtained.
252. *Ibid.*, pp. 222, 247. T. A. Rickard. Description of gold stamp mills at Otago, New Zealand, with results obtained.
253. *Ibid.*, p. 295. J. Hicks. Discussion of the losses in dressing tin ores in Cornwall.
254. *Ibid.*, pp. 389, 416. T. A. Rickard. Description of gold stamp mills at Ballarat, Victoria, with results obtained.
255. *Ibid.*, pp. 534, 560. T. A. Rickard. Description of gold stamp mills in the Ovens district, Victoria, with results obtained.
256. *Ibid.*, Vol. LVI., (1893), p. 544. E. C. Moxham. Short description of the concentration plant of the Bertha Zinc Company in Virginia.
257. *Ibid.*, pp. 639, 663. T. A. Rickard. Description of gold stamp mills in Amador County, California, with losses and results obtained.
258. *Ibid.*, pp. 101, 128. T. A. Rickard. Discussion of the various processes of gold milling used in different districts in Australia, with the losses and results obtained.
259. *Ibid.*, Vol. LVII., (1894), p. 127. S. I. Hallet. Full description of Hallet's hand testing jig. Drawing given.
260. *Ibid.*, pp. 174, 198. T. A. Rickard. Description of gold stamp mills at Bendigo, Australia, with losses and results obtained.
261. *Ibid.*, p. 223. Abstract of *Am. Inst. Min. Eng.*, Vol. XXIV., p. 34.
262. *Ibid.*, pp. 460, 486, 511. T. A. Rickard. Description of gold stamp mills at Grass Valley, California, giving losses and results obtained.
263. *Ibid.*, p. 490. W. B. Phillips. Figures on the cost of magnetic concentration of Cranberry ore in North Carolina.
264. *Ibid.*, Vol. LVIII., (1894), p. 9. G. T. Cooley. Short description of plant for dressing zinc ore in Southwest Missouri.
265. *Ibid.*, p. 33. Abstract of *L. Superior Min. Inst.*, Vol. II., (1894), p. 97.

266. *Ibid.*, pp. 269, 293. Abstract of *Engineering*, Vol. LVIII., (1894), pp. 262, 294.
267. *Ibid.*, p. 390. G. F. Deetkin. Short history of the development of concentration in California gold stamp mills.
268. *Ibid.*, p. 392. J. R. Holibaugh. Dressing of zinc ore in Southwest Missouri and results obtained.
269. *Ibid.*, p. 415. Abstract of *Engineering*, Vol. LVIII., (1894), pp. 262, 294.
270. *Ibid.*, p. 489. F. M. Drake. Description of gold stamp mill of Wentworth Company at Lucknow, New South Wales, with results obtained.
271. *Ibid.*, p. 536. Abstract of *Bull. Soc. Ind. Min.*, Series III., Vol. VII., (1893), pp. 465-485.
272. *Ibid.*, Vol. LIX., (1895), p. 243. T. A. Rickard. Discussions of the reasons for the Gilpin County, Colorado, and for the California methods of gold stamp milling.
273. *Ibid.*, Vol. LX., (1895), pp. 29, 441, 466. W. H. Storms. Description of several gold stamp mills in California with blanket plants.
274. *Ibid.*, p. 195. F. Hille. Outline of a concentrating plant for galena and zinc blende.
275. *Ibid.*, pp. 221, 247. T. A. Rickard. Description of gold stamp mills in the Black Hills, South Dakota.
276. *Ibid.*, p. 371, 397. T. A. Rickard. Discussion of adaptability of gold stamp mills to various purposes. Some abstract principles of gold milling and a plea for systematic testing.
277. *Ibid.*, p. 439. No author. Brief description of a concentrating plant in Colorado.
278. *Ibid.*, Vol. LXII., (1896), p. 319. B. McDonald. Description of gold stamp mill at Gibbonsville, Idaho.
279. *Ibid.*, Vol. LXIV., (1897), p. 68. P. W. Duffield. Same as *Inst. Min. & Met.*, Vol. V., (1896-7), p. 325.
280. *Ibid.*, p. 98. J. P. Wetherill. Full outline of the Wetherill magnetic concentrating plant at Franklin Furnace, New Jersey.
281. *Ibid.*, p. 305. P. Buttgenbach. Description and dimensions of a glass hand testing jig.
282. *Ibid.*, p. 488. No author. Report of the Homestake Mining Company, South Dakota.
283. *Ibid.*, Vol. LXV., (1898), p. 459. No author. Results of an experiment on the minimum amount of water required for stamp mills.
284. *Ibid.*, p. 459. C. W. Merrill. Description of the plant for cyaniding the tailings of the Montana Mining Company at Marysville, Montana.
285. *Ibid.*, p. 549. F. L. Bartlett. Some general ideas on milling with especial reference to small fine crushing plants, an illustration of which is given.
286. *Ibid.*, Vol. LXVI., (1898), p. 400. No author. Report of the Anaconda Copper Mining Company, Montana, giving detailed costs.
287. *Ibid.*, p. 575. A. H. Bromly. Weight of a cubic foot of ore when crushed for cyaniding, in the Hauraki peninsula, New Zealand.
288. *Ibid.*, Vol. LXVII., (1899), p. 83. No author. Use of a Dodge breaker before stamps to increase capacity.
289. *Ibid.*, p. 266. No author. Report of the Tamarack Mining Company, Michigan, giving detailed costs.
290. *Ibid.*, p. 294. No author. Report of the Quincy Mining Company and of the Osceola Consolidated Mining Company, Michigan, giving detailed costs.
291. *Ibid.*, p. 322. No author. Report of the Atlantic Mining Company, Michigan, giving detailed costs.
292. *Ibid.*, p. 409. No author. Report of the Horn Silver Mining Company, Utah, giving detailed costs.
293. *Ibid.*, p. 472. No author. Report of the Franklin Mining Company, Michigan, giving detailed costs.
294. *Ibid.*, Vol. LXVIII., (1899), p. 187. Report of the Wolverine Mining Company, Michigan, giving detailed costs.
295. *Ibid.*, p. 370. No author. Report of the Alaska Treadwell Gold Mining Company, Alaska, giving detailed costs.
296. *Ibid.*, Vol. LXIX., (1900), p. 263. No author. Short description of the Thayer portable stamp mill for testing.
297. *Ibid.*, p. 742. Abstract of *Inst. Min. & Met.*, Vol. VIII., p. 379.
298. *Ibid.*, Vol. LXX., (1900), p. 68. No author. Short note on the arrangement of the mills at Monteponi, Sardinia.
299. *Ibid.*, pp. 128, 161, 190. P. G. Morgan. Elaborate article on gold dredging in New Zealand.
300. *Ibid.*, p. 395. F. Powell. Description of gold dredges on Snake River, Idaho, with results obtained.
301. *Ibid.*, p. 519. No author. Short note on dressing corundum in Renfrew County, Ontario, Canada.

302. *Ibid.*, Vol. LXXI., (1901), p. 119. T. J. Barbour. Account of present state of dredging industry in California with costs and results.
303. *Ibid.*, p. 823; Vol. LXXII., (1901), pp. 11, 40. C. P. Grimsley. Very complete article on gold dredging.
304. *Ibid.*, Vol. LXXII., (1901), p. 322. Editor. General statement of the work done by the blende mills in Southwest Missouri.
305. *Ibid.*, p. 328. No author. Result of the removal of pyrite from blende in Missouri by roasting and treatment on a Waring magnetic concentrator.
306. *Ibid.*, Vol. LXXIII., (1902), p. 311. No author. Description of new concentration mill of the Anaconda Copper Mining Company in Montana.
307. *Ibid.*, p. 468. Editor. Results obtained in Osceola mill, Michigan, on native copper rock.
308. *Ibid.*, Vol. LXXIV., (1902), p. 178. E. Skewes. Description of the method of washing tin slimes recovered from the Red river, Cornwall, with results obtained.
309. *Fed. Inst. Min. Eng.*, Vol. IX., (1895), p. 344. A. G. Charleton. Description of the milling process for gold ores at Pestarena, Italy, by amalgamation in Francfort mills. Details and costs.
310. *Freiberger Jahrb.*, (1890), p. 65. O. Bilharz. Description of the new Himmelfahrt mill at Freiberg, Saxony.
311. *Ibid.*, (1893), p. 80. L. Seemann. Discussion of the losses in sizing, jigging and wet stamping.
312. *Genie Civil*, Vol. XVII., (1890), p. 337. G. Prus. General article on magnetic concentration, considering mechanical treatment, operation of different separators, giving results obtained and cost of installation.
313. *Ibid.*, Vol. XXV., (1894), pp. 84, 137, 164. P. Ferrand. Very full description of gold mill at Ouro Preto, Brazil. Fully illustrated, showing general arrangement and details. Figures on cost and labor.
314. *Gen. Min. Assoc. Quebec*, Vol. I., (1892-3), p. 150. L. A. Klein. Description of method of dressing asbestos.
315. *Inst. Civ. Eng.*, Vol. CVIII., (1892), p. 133. A. H. Curtis. Comparative tables, showing cost, capacity, power and effective horse power per ton of quartz, of stamp mills, Krom rolls and Huntington mills.
316. *Ibid.*, Vol. CXIV., (1892-3), p. 132. M. B. Jamieson and J. Howell. Description of concentrating plant on silver ores at Broken Hill, New South Wales, with figures on capacity, water and costs together with reasons why it is unsuccessful.
317. *Ibid.*, Vol. CXVI., (1894), p. 4. R. E. Commans. General article describing the various processes and machines for separating valuable and waste minerals after crushing.
318. *Ibid.*, p. 331. F. R. Kensington. Description of the washing of iron ore at Cabarceno, Spain, by means of wash trommels.
319. *Ibid.*, Vol. CXXIII., (1895-6), p. 379. H. W. F. Kayser and Richard Provis. Description of tin dressing plant at Mount Bischoff, Tasmania.
320. *Inst. Mech. Eng.*, (1873), p. 119. H. T. Ferguson. Description of the process of tin dressing in Cornwall, machines used and results obtained.
321. *Inst. Min. & Met.*, Vol. II., (1893-4), p. 92. H. L. Lawrence. Description of the jigging and magnetic plant for dressing zinc blende and magnetite at the New Pierrefitte mines, France.
322. *Ibid.*, Vol. III., (1894-5), p. 168. C. G. W. Lock. A few notes on the milling practice in the Black Hills, South Dakota.
323. *Ibid.*, p. 344. A. C. Claudet. Description of gold stamp mills at Mesquital, Mexico, with power, cost and results obtained.
324. *Ibid.*, Vol. IV., (1895-6), p. 3. F. Owen. Description of several gold stamp mills in the Remedios district (Republic of Colombia) with results obtained.
325. *Ibid.*, Vol. V., (1896-7), p. 99. G. M. Barber. Description of the treatment of gold ores at Atacama, Chili, by dry grinding with a Grtison ball mill, followed by pan amalgamation using sea water. Results obtained with both wet and dry grinding.
326. *Ibid.*, p. 116. S. G. McCormick. Scheme of treatment of gold ores at Ouro Preto mine, Brazil, by stamping and concentration.
327. *Ibid.*, p. 153. P. R. Robert. Details of the North Star stamp mill at Grass Valley, California, with results obtained, power, cost, losses, etc.
328. *Ibid.*, p. 243. A. G. Charleton. Discussion of the method of keeping mine accounts and making out reports, with various illustrations.
329. *Ibid.*, p. 325. P. W. Duffield. Short description of a hand testing jig.
330. *Ibid.*, Vol. VI., (1897-1898), p. 51. Frank Owen. Method of working tin placers in Perak, Malay Peninsula.
331. *Ibid.*, Vol. VII., (1898-1899), p. 12. W. H. Derrick. Description of the method of dressing tin ore in the Malay Peninsula.

332. *Ibid.*, p. 77. C. S. Pasley. Short descriptions of several tin dressing mills in Bolivia.
333. *Ibid.*, p. 175. R. A. Thomas. Description of the Dolcoath tin mill, Cornwall, using Frue vanners, with results obtained.
334. *Ibid.*, Vol. VIII., (1899-1900), p. 379. C. M. Rolker. Full description and discussion of the Elmore oil concentration process and results obtained at Glasdir, Wales.
335. *Iron*, Vol. IX., (1877), pp. 739, 771; Vol. X., (1877), pp. 34, 131, 229, 261, 323, 419, 483, 514, 547, 581, 611, 643, 675, 707, 739, 771, 802; Vol. XI., (1878), pp. 6, 67, 99, 131, 165. Same as *Rev. des Mines*, Series II., Vol. I., (1877), pp. 11, 275.
336. *Ibid.*, Vol. XL., (1892), p. 165. Same as *Oest. Zeit.*, Vol. XL., (1892), p. 233.
337. *Iron Age*, Vol. LII., (1893), p. 202. No author. Description of the Hibernia magnetic concentration plant in New Jersey.
338. *Ibid.*, Vol. LIV., (1894), p. 222. Abstract of *Inst. Civ. Eng.*, Vol. CXVI., p. 331.
339. *Ibid.*, Vol. LX., Oct. 28, (1897), p. 1. No author. Description of Edison's magnetic concentration plant in New Jersey.
340. *Iron & Steel Inst.*, Vol. XLV., (1894), Part I., p. 426. An abstract of *Bull. Soc. Ind. Min.*, Series III., Vol. VII., (1893), pp. 465-485.
341. *Jahrb. Geol. Reichsanstalt*, Vol. XLVII., (1897), p. 43. Franz Kretschmer. Graphite dressing in Moravia.
342. *L. Superior Min. Inst.*, Vol. II., (1894), p. 97. F. F. Sharpless. Description of the Atlantic mill for Lake Superior native copper rock.
343. *McClure's Mag.*, Nov., (1897), p. 75. Theodore Waters. Description of Edison's magnetic concentration plant in New Jersey.
344. *Memoirs Nat. Acad. Sciences*, Vol. II., (1883), p. 165. W. H. Brewer. Paper on the subsidence of particles in liquids.
345. *Min. Ass. & Inst. Cornwall*, Vol. I., Part II., (1886), p. 93. R. J. Frecheville. Discussion of the losses in Cornish tin dressing and suggestions for improvements.
346. *Ibid.*, Vol. IV., (1892), p. 111. J. Hicks. Discussion of the losses from slimes in dressing tin and means of reducing them.
347. *Min. Ind.*, Vol. IV., (1895), p. 531. R. Helmhacker. Short description of a quicksilver concentration plant at Idria, Austria.
348. *Ibid.*, Vol. V., (1896), p. 19. C. N. Jenks. Short description of processes for dressing corundum.
349. *Ibid.*, p. 619. F. L. Bartlett. Discussion of the difficulties of concentrating blende when pyrite is present.
350. *Ibid.*, Vol. VI., (1897), p. 354. W. R. Ingalls. Condition of the gold dredging industry in the United States.
351. *Ibid.*, pp. 359-366. W. R. Ingalls. Various figures of costs in gold and silver mills.
352. *Ibid.*, p. 702. R. H. Richards. Description of methods of testing for a mill process.
353. *Ibid.*, p. 709. J. Gross. Description of the Golden concentrating plant, Colorado.
354. *Ibid.*, Vol. VII., (1898), p. 150. T. C. Hopkins. Description of methods for washing kaolin by use of log washers, blungers, and settling tanks.
355. *Ibid.*, p. 353. R. H. Richards. Abstract of *Can. Min. Rev.*, Vol. XVII., (1898), p. 270.
356. *Ibid.*, Vol. VIII., (1899), p. 13. L. S. Ropes. Short description of the mill of the Isel Corundum Company in Georgia, using jigs and vanners.
357. *Ibid.*, p. 326. A. Grothe. A comprehensive article on gold dredging in the United States.
358. *Ibid.*, p. 622. No author. Short outline of the Mount Bischoff tin dressing plant in Tasmania.
359. *Ibid.*, p. 668. F. Nicholson. Description of standard 100-ton concentrating mill for blende in Southwest Missouri with complete specifications of the same and figures on costs of mills and milling.
360. *Ibid.*, Vol. IX., (1900), p. 14. No author. Short description of corundum dressing mill of the Canada Corundum Company, Limited, at the Robillard mine in Raglan township, Ontario, Canada.
361. *Ibid.*, p. 107. H. Ries. A short description of the method of washing clay.
362. *Ibid.*, Vol. X., (1901), p. 690. Frank Nicholson. Figures on costs of mills and milling blende ores in the Joplin district of Missouri. Water required.
363. *Mines & Minerals*, Vol. XVIII., (1897-8), p. 200. Geo. Leighton. Short description of methods of dressing phosphate in South Carolina.
364. *Ibid.*, Vol. XIX., (1898), pp. 35, 181, 232. G. E. Bailey. Notes on the location and construction of gold stamp mills.
365. *Ibid.*, Vol. XX., (1900), p. 303. Arthur Lakes. Short description of the Standard mill in the Cœur d'Alêne district, Idaho.
366. *Ibid.*, p. 343. No author. Short description of the new Bunker Hill and Sullivan mill at Wardner, Idaho.

367. *Ibid.*, Vol. XXII., (1901), p. 7. C. V. Jenkins. Discussion of method of keeping mine and mill accounts.
368. *Min. Jour.*, Vol. XLIII., (1873), p. 353. T. Parkyn. Short note on tin dressing at St. Dennis, Cornwall. Illustrated, showing general arrangement of mill.
369. *Min. Soc. N. Scotia*, Vol. I., Part II., (1892-3), p. 34. J. E. Hardman. Description of the Oldham gold stamp mill, Nova Scotia, with costs and results obtained.
370. *Min. & Sci. Press*, Jan. 5, (1884), p. 1. Description and estimates of cost of constructing and running Anderson's concentrating mill.
371. *Ibid.*, Vol. LXI., (1890), p. 345. No author. Short description of a concentrating mill for galena.
372. *Ibid.*, Vol. LXVI., (1893), p. 339. No author. Short description of the Santa Eduwiges wet silver mill, Mexico.
373. *Ibid.*, Vol. LXVIII., (1894), p. 193. No author. Short description of a combination mill built by the Union Iron Works.
374. *Ibid.*, p. 197. Short abstract of *Am. Inst. Min. Eng.*, Vol. XXII., pp. 321, 647.
375. *Ibid.*, pp. 209, 260. A. B. Paul. Short discussion of the Colorado and California systems of gold milling.
376. *Ibid.*, p. 324. No author. Short note on loss of gold in stamp mill tailings with figures from the Robinson gold mine, Johannesburg, South Africa.
377. *Ibid.*, Vol. LXIX., (1894), pp. 22, 33. Same as *Am. Inst. Min. Eng.*, Vol. XXIV., p. 220.
378. *Ibid.*, p. 241. No author. Description of the Eureka Hill combination mill in Utah.
379. *Ibid.*, Vol. LXX., (1895), p. 70. E. L. Ballou. Results of stamping and concentration on a sulphide gold ore.
380. *Ibid.*, p. 97. A. C. Robbins. Description of plant for amalgamation and concentration of river sand at Dayton, Nevada.
381. *Ibid.*, Vol. LXXII., (1896), p. 61. No author. Short description of concentration plant on Comstock tailings, Nevada, using Kinkead mills, amalgamating plates and vanners.
382. *Ibid.*, Vol. LXXIII., (1896), p. 277. W. S. Hutchinson. Description of the Gates canvas plant at Grass Valley, California.
383. *Ibid.*, p. 523. J. Ross, Jr. Cost of milling at the Wildman and Hector gold stamp mills, California.
384. *Ibid.*, Vol. LXXIV., (1897), p. 408. Ph. Reardon. Discussion of losses in Colorado gold stamp mills.
385. *Ibid.*, p. 473. S. R. Porter. Cost of gold stamp milling at the Baliol Mill, Sutters Creek, California.
386. *Ibid.*, Vol. LXXV., (1897), p. 98. E. B. Kirby. General discussion of the different systems of ore dressing.
387. *Ibid.*, pp. 432, 458. No author. Description of Edison's magnetic concentration plant.
388. *Ibid.*, p. 459. E. McCormick. A summary statement of the Calumet and Hecla mill scheme, Lake Superior.
389. *Ibid.*, Vol. LXXVI., (1898), p. 153. No author. Short note on gasoline engines for power in the Arizona desert.
390. *Ibid.*, pp. 391, 490. Chas. Butters. Coagulation, concentration, and settling of slimes.
391. *Ibid.*, p. 513. No author. Effects of different salts and acid on precipitation of slimes.
392. *Ibid.*, p. 590. No author. Description of Hendy improved gold hand pan with flange just below inner edge.
393. *Ibid.*, Vol. LXXVIII., (1899) p. 208. J. W. Gray. Description of two New Zealand gold dredges and results obtained.
394. *Ibid.*, Vol. LXXIX., (1899), p. 36. R. H. Postlethwaite. Detailed description of Kia Ora dredge, on Feather River, California, with results obtained.
395. *Ibid.*, Vol. LXXXI., (1900), p. 184. G. W. Starr. Description of Empire gold stamp mill, with Gates' canvas plant, at Grass Valley, California, giving figures on dimensions, costs and percentage recovered.
396. *New Zealand Inst. Min. Eng.*, Aug. 28, 1898. W. H. Cutten. Gold dredging in New Zealand.
397. *N. Carolina Geol. Survey Bull.*, No. 11, (1896), p. 83. J. V. Lewis. Description of methods of cleaning corundum at Sapphire and at Corundum Hill, North Carolina.
398. *North Eng. Inst. Min. & Mech. Eng.*, Vol. XLIII., (1893-4), p. 37, *et seq.* A. G. Charleton. General discussion of the variation in the items of cost in constructing and running mills, giving specific examples from different mills. Description of gold stamp mill practice in various districts, compiled from various authors.
399. *Ontario Rep.*, Vol. VII., (1898), p. 242. C. De Kalb. Report of tests made on corundum ore with scheme for treatment.

400. *Oest. Zeit.*, Vol. XXXIII., (1885), p. 699. J. Habermann. Results of comparative tests on Salzburger tables run by the Przibram system and on those run by the Raibl system.
401. *Ibid.*, Vol. XXXIV., (1886), p. 67. J. Habermann. Description of treatment of zinc ores at Raibl in Carinthia, and results obtained.
402. *Ibid.*, p. 621. J. Habermann. Description of plant with fine crushing at Przibram, Bohemia, with figures on power, water and capacity.
403. *Ibid.*, Vol. XXXVI., (1888), p. 230. K. von Reytt. Per cent. of moisture in drained ore.
404. *Ibid.*, pp. 508, 515. C. von Reytt. Description of Karlick screen and jig plant at Przibram, with figures on power.
405. *Ibid.*, Vol. XXXVII., (1889), p. 133. E. Ferraris. Description of plant for dressing zinc ores at Monteponi, Sardinia.
406. *Ibid.*, pp. 553, 569, 578. E. Purtscher. Same as *Cal. Rep.*, Vol. VIII., p. 696.
407. *Ibid.*, Vol. XXXVIII., (1890), p. 213. O. Bilharz. Remarks on the mode of treatment for gold or lead ores.
408. *Ibid.*, Vol. XL., (1892), p. 233. E. Ferraris. Description of roasting and magnetic separation plant at Monteponi, Sardinia.
409. *Ibid.*, Vol. XLI., (1893), pp. 39, 51. J. Billek. Description of concentration plant on galena-blende-pyrite at Maiern, Austria, and results obtained.
410. *Ibid.*, Vol. XLII., (1894), p. 421. E. Ferraris. Description of the fine concentration plant at Monteponi, Sardinia.
411. *Rev. des Mines*, Series II., Vol. I., (1877), pp. 11, 275. O. Dupont and Ch. Quéhant. General article on dressing lead and zinc ores in Belgium.
412. *Ibid.*, Series III., Vol. XXI., (1893), p. 287. L. Demaret. General article on dressing tin ores in Cornwall.
413. *Royal Inst. Great Britain*, Vol. XV., Part II., No. 91, p. 483. Wm. Crookes. Article on diamonds.
414. *S. Afr. Min. Jour.*, Vol. VII., (1898), p. 359. R. G. Smith. Settling fine slimes by adding dissolved substances.
415. *Ibid.*, p. 550. No author. Weight of a cubic foot of broken quartz in South Africa.
416. *Ibid.*, pp. 659, 674. No author. Full discussion and figures on consumption and loss of water in stamp mills on the Rand.
417. *Ibid.*, p. 935. No author. Short description of the Jumpers Deep gold mill in South Africa and results obtained.
418. *Sch. Mines Quart.*, Vol. IV., (1883), pp. 179, 298; Vol. V., (1883), pp. 8, 140. W. B. Kunhardt. Same as Kunhardt, W. B., "Ore Dressing in Europe."
419. *Ibid.*, Vol. IX., (1887), p. 74. J. F. Kemp. Description of the Desloge mill for galena in Missouri.
420. *Ibid.*, (1888), p. 145. G. W. Maynard and W. B. Kunhardt. Description of the dressing of iron ores at Iron Mountain, Missouri; Lyon Mountain, New York; Negaunee, Michigan, together with dressing tests on New Jersey and Adirondack ores, with results obtained.
421. *Ibid.*, Vol. XIV., (1892-3), pp. 218, 330; Vol. XV., (1893-4), pp. 16, 115, 126. M. Bellom. Same as *Ann. des Mines*, Vol. XX., (1891), p. 1.
422. *Ibid.*, Vol. XXI., (1899-1900), pp. 28, 137, 239. Same as *Berg. u. Hütt. Jahrb.*, Vol. XLVI., (1898), p. 357.
423. *Sci. American Sup.*, Vol. XLIII., (1897), p. 18,239. Similar to *Min. & Sci. Press*, Vol. LXXV., p. 98.
424. *Soc. Arts Jour., London*, Vol. XLIII., (1895), p. 609. A. G. Charleton. The dressing of nickel ores.
425. *Ibid.*, Vol. XLVI., (1897), p. 69. B. H. Brough. Short description of magnetic concentrating plant on the island of Svarto, Sweden.
426. *Soc. Chem. Ind. Jour.*, Vol. XVII., (1898), p. 117. R. G. Smith. Discussion of the different hypotheses on flocculation of suspended particles.
427. *Stahl u. Eisen*, Vol. XIII., (1893), p. 675. No author. Some results of magnetic concentration obtained from *Am. Inst. Eng.* references.
428. *Ibid.*, Vol. XVII., (1897), p. 901. No author. Description of the magnetic separating and wet dressing plant on the island of Svarto, Sweden, for iron ore and apatite.
429. *Tenth U. S. Census*, Vol. XIII., (1880), p. 242. A general statistical article on gold and silver amalgamating mills in the United States.
430. *Thon-Ind. Zeit.*, Vol. XVII., (1893), p. 140. G. Vogt. Experiments on the testing of clays by the washing process for the separation of clay, mica, quartz, and feldspar.
431. *Ibid.*, pp. 632, 660, 707, 813, 838. Mr. Hotop. Very full description of the washing of clays, describing various forms of washers.

432. *Ibid.*, Vol. XXIV., (1900), p. 1825. J. W. Schamberger. Short description of clay washing.
433. *U. S. Geol. Survey Bull.* 36. C. Barus. Discussion of subsidence of fine solid particles in liquids with experimental tables on effects of different solutions, etc.
434. *U. S. Geol. Survey, Min. Resources*, (1886), p. 688. W. A. Raborg. Short note on experimentally separating graphite from gangue by means of petroleum.
435. *Ibid.*, (1897), Part VI., p. 387. H. Ries. Description of washing clays.
436. *Ibid.*, p. 392. G. Vogt. An abstract of *Thon-Ind. Zeit.*, Vol. XVII., (1893), p. 140.
437. *Zeit. Berg. Hütt. u. Salinen-wesen*, Vol. XXI., (1873), p. 85. Kutscher. Full description of the ore dressing works at Clausthal.
438. *Ibid.*, Vol. XXVI., (1878), p. 105. E. Althans. A general article on ore dressing.
439. *Ibid.*, Vol. XXVIII., (1880), p. 210. C. Mosler. Description of method of dressing copper at Lake Superior and results obtained.
440. *Ibid.*, Vol. XXXII., (1884), p. 389. H. Koch. Description of ore dressing plant at Tarnowitz, Silesia.
441. *Ibid.*, Vol. XXXIII., (1885), p. 245. No author. Description of ore dressing plant at Beuthen in upper Silesia.
442. *Ibid.*, Vol. XLI., (1893), p. 1. O. Hoppe. Theoretical discussion of the principles of water separation, more especially by jigs, as advanced by various authors.
443. *Ibid.*, Vol. XLIII., (1895), p. 215. No author. Short description of the new close sizing jigging mill of the Bleicharley mine at Beuthen.
444. *Ibid.*, Vol. XLV., (1897), p. 232. No author. Brief description of a plant for roasted spathic iron ore.
445. *Ibid.*, Vol. XLVII., (1899), p. 209. No author. Use of specific gravity in place of chemical analyses to determine the value of products at Tarnowitz, Silesia.
446. *Ibid.*, p. 246. Mr. Hübner. Method of testing slimes by specific gravity as used at Tarnowitz.
447. *Zeit. Ver. Deut. Ing.*, Vol. XXX., (1886), p. 2. C. Sachs. Description of the Neuhof mill at Beuthen in upper Silesia.
448. *Ibid.*, Vol. XXXV., (1891), pp. 1213, 1433. O. Hoppe. Theoretical discussion of classifying and the velocity of bodies falling in water.
449. *Ibid.*, Vol. XXXVIII., (1894), p. 52. No author. Short note on the Huntington mill used for amalgamation of a gold-silver ore, with figures on power and capacity.

APPENDIX.

TABLES AND OTHER USEFUL INFORMATION.

Equivalents of Weights and Measures.*..... ....

Length.

1 mile = 5,280 feet, = 1609.31 meters.
1 foot = 12 inches, = 0.30479 meter.
1 inch = 25.3995 millimeters.
1 kilometer = 1000 meters, = 0.62138 mile.
1 meter = 100 centimeters, = 3.280899 feet, = 39.370790 inches.
1 centimeter = 10 millimeters, = 0.393708 inch.
1 millimeter = 0.039371 inch.

Surface.

1 square yard = 9 square feet, = 0.83610 square meter.
1 square foot = 144 square inches, = 9.2900 square decimeters, = 929.00 square centimeters.
1 square inch = 6.4514 square centimeters.
1 square meter = 100 square decimeters, = 10.764 square feet.
1 square decimeter = 100 square centimeters, = 0.10764 square foot, = 15.501 square inches.
1 square centimeter = 100 square millimeters, = 0.15501 square inch.
1 square millimeter = 0.001550 square inch.

Volume.

1 cubic yard = 27 cubic feet, = 0.76451 cubic meter, = 201.97 gallons.
1 cubic foot = 1728 cubic inches, = 0.028315 cubic meter, = 7.4805 gallons, = 28.3153 liters, = 29.922 quarts.
1 cubic inch = 0.017316 quart, =16.386 cubic centimeters.
1 gallon = 4 quarts, = 0.13368 cubic foot, = 231.0000 cubic inches, = 3.7852 liters.
1 quart = 2 pints, = 57.7500 cubic inches, = 0.94630 liter, = 946.30 cubic centimeters.
1 cubic meter = 1000 liters, = 1.3080 cubic yards, = 35.317 cubic feet, = 264.19 gallons.
1 liter or 1 cubic decimeter = 1000 cubic centimeters, = 0.035317 cubic foot, = 61.027 cubic inches, = 0.26419 gallon, = 1.0567 quarts.
1 cubic centimeter = 0.061027 cubic inch.

Weight.

1 ton = 2000 pounds avdp., = 907.19 kilos. This is the ton used throughout this book unless otherwise specified.
1 long ton = 2240 pounds avdp., = 1016.05 kilos.
1 pound avoirdupois = 16 ounces avdp., = 0.45359 kilo, = 7000 grains, = 1.2153 pounds troy.
1 pound troy = 5760 grains, = 0.82286 pound avdp., = 12 ounces troy, = 0.37324 kilo.
1 ounce avoirdupois = 437.50 grains, = 28.3495 grams, = 0.91146 ounce troy.
1 ounce troy = 480 grains, = 20 pennyweights, = 31.1035 grams, = 1.0971 ounces avdp. The troy ounce and pound are used only for gold and silver and other precious metals.
1 grain = 64.799 milligrams.
1 metric ton = 1000 kilos, = 2204.62 pounds avdp., = 1.1023 tons, = 0.98421 long tons.
1 kilo or kilogram = 1000 grams, = 2.2046 pounds avdp.
1 gram = 0.035274 ounce avdp., = 0.032151 ounce troy, = 15.43235 grains, = 1000 milligrams.
1 milligram = 0.015432 grain.

Water.

Note.—These figures are all for water at its maximum density, that is, at a temperature of 39.2° Fahrenheit.
1 cubic foot of water = 62.425 pounds, = 28.3153 kilos.
1 cubic inch of water = 0.036125 pound, = 252.88 grains, = 16.386 grams.
1 ton of water = 32.038 cubic feet, = 239.665 gallons.
1 pound of water = 0.016019 cubic foot, = 0.47933 quart, = 27.681 cubic inches, = 0.45359 liter.
1 gallon of water = 8.3448 pounds.
1 cubic meter of water = 2204.6 pounds.
1 kilo of water or 1 liter = 2.2046 pounds, = 0.035317 cubic foot, = 61.027 cubic inches, = 1.0567 quarts.

*Taken from C. Hering. Table of Equivalents of Units of Measurement.

1 cubic centimeter of water = 1 gram, = 15.432 grains.
Sea water averages 1.028 times as heavy as pure water and it contains about 3.44% of solids (of which 2.5 % is sodium chloride).
The water of Great Salt Lake, Utah, is 1.170 times as heavy as pure water and contains 22.42% of solids.
Dead Sea water is 1.172 times as heavy as pure water.

Power.

1 horse power = 33000 foot pounds per minute, = 4562.33 kilogram-meters per minute, = 0.745941 kilowatt, = 1.01385 metric horse power.
1 metric horse power = 32549.0 foot pounds per minute, = 4500 kilogram-meters per minute, = 0.735750 kilowatt, = 0.98634 horse power.

Pressure.

1 atmosphere = 760 millimeters or 29.922 inches of mercury column, = 10.333 meters or 33.901 feet of water column, = 14.696 pounds per square inch, = 1.0333 kilos per square centimeter.
1 pound per square inch, = 0.070310 kilo per square centimeter.
1 kilo per square centimeter = 14.223 pounds per square inch.

TABLE 401.—ATOMIC WEIGHTS.*

Aluminum	Al	27.1	Molybdenum	Mo	96.0
Antimony	Sb	120.2	Neodymium	Ne	143.6
Argon	A	39.9	Neon		20
Arsenic	As	75.0	Nickel	Ni	58.7
Barium	Ba	137.4	Nitrogen	N	14.04
Bismuth	Bi	208.5	Osmium	Os	191
Boron	B	11	Oxygen	O	16.00
Bromine	Br	79.96	Palladium	Pd	106.5
Cadmium	Cd	112.4	Phosphorus	P	31.0
Cæsium	Cs	133	Platinum	Pt	194.8
Calcium	Ca	40.1	Potassium	K	39.15
Carbon	C	12.00	Praseodymium	Pr	140.5
Cerium	Ce	140	Radium	Ra	225
Chlorine	Cl	35.45	Rhodium	Rh	103.0
Chromium	Cr	52.1	Rubidium	Rb	85.4
Cobalt	Co	59.0	Ruthenium	Ru	101.7
Columbium (Niobium)	Cb	94	Samarium	Sm	150
Copper	Cu	63.6	Scandium	Sc	44.1
Erbium	E	166	Selenium	Se	79.2
Fluorine	F	19	Silicon	Si	28.4
Gladolinium	Gd	156	Silver	Ag	107.93
Gallium	Ga	70	Sodium	Na	23.05
Germanium	Ge	72.5	Strontium	Sr	87.6
Glucinum (Beryllium)	Gl	9.1	Sulphur	S	32.06
Gold	Au	197.2	Tantalum	Ta	183
Helium	He	4	Tellurium	Te	127.6
Hydrogen	H	1.008	Terbium	Tb	160
Indium	In	114	Thallium	Tl	204.1
Iodine	I	126.85	Thorium	Th	232.5
Iridium	Ir	193.0	Thulium	Tm	171
Iron	Fe	55.9	Tin	Sn	119.0
Krypton	K	81.8	Titanium	Ti	48.1
Lanthanum	La	138.9	Tungsten	W	184.0
Lead	Pb	206.9	Uranium	U	238.5
Lithium	Li	7.03	Vanadium	V	51.2
Magnesium	Mg	24.36	Xenon	X	128
Manganese	Mn	55.0	Ytterbium	Yb	173.0
Mercury	Hg	200.0	Yttrium	Yt	89.0
			Zinc	Zn	65.4
			Zirconium	Zr	90.6

*Based on Oxygen as 16.00. From the report of the International Committee for 1902.

TABLE 402.—SPECIFIC GRAVITIES OF MINERALS AND COMMON METALS.*

	Specific gravity.		Specific gravity.
Alkinite, $3(Pb,Cu_2)S.Bi_2S_3$	6.1 — 6.8	Anorthite, $CaAl_2Si_2O_8$	2.74 — 2.76
Albertite	1.097	Anthracite	1.32 — 1.7
Albite, $NaAlSi_3O_8$	2.62 — 2.65	Antimony, Sb	6.71
Aluminum, Al	2.60	Apatite, $3Ca_3P_2O_8+CaF_2.CaCl_2$	3.17 — 3.23
Amalgam, Ag_2Hg_3	13.75 —14.1	Apophyllite, $H_7KCa_4(SiO_3)_8+4\frac{1}{2}H_2O$	2.3 — 2.4
Amphibole $RRSiO_3$	2.9 — 3.4	Aragonite, $CaCO_3$	2.93 — 2.95
Analcite, $NaAlSi_2O_6+H_2O$	2.22 — 2.29	Argentite, Ag_2S	7.20 — 7.36
Andalusite, Al_2SiO_5	3.16 — 3.20	Arsenic, As	5.73
Andesine, $nNaAlSi_3O_8$. $mCaAl_2Si_2O_8$	2.68 — 2.69	Arsenolite, As_2O_3	3.70 — 3.72
Anglesite, $PbSO_4$	6.12 — 6.39	Arsenopyrite, FeAsS	5.9 — 6.2
Anhydrite, $CaSO_4$	2.899— 2.985	Asphaltum	1.0 — 1.8
Ankerite $CaCO_3.(Mg,Fe,Mn)CO_3$	2.95 — 3.1	Atacamite, $CuCl_2.3Cu(OH)_2$	3.75 — 3.77

*The minerals are taken from E. S. Dana, System of Mineralogy, and the metals from Landolt und Bornstein, Physikalische Chemische Tabellen.

	Specific gravity.
Axinite, $HR_3BAl_2(SiO_4)_4$	3.271
Azurite, $Cu_3(OH)_2(CO_3)_2$	3.77 — 3.83
Barite, $BaSO_4$	4.3 — 4.6
Barnhardtite, $Cu_4Fe_2S_5$?	4.52
Bauxite, $Al_2O_32H_2O$	2.55
Berthierite, $FeSb_2S_4$	4.0 — 4.3
Beryl, $Be_3Al_2Si_6O_{18}$	2.63 — 2.80
Biotite, From $(H,K)_2(Mg.Fe)_4(Al,Fe)_2Si_4O_{16}$ to $(H,K)_2(Mg,Fe)_2Al_2Si_4O_{12}$	2.7 — 3.1
Bismuth, Bi	9.8
Bismuthinite, Bi_2S_3	6.4 — 6.5
Bituminous Coal	1.14 — 1.4
Bornite, Cu_3FeS_3	4.9 — 5.4
Bournonite, $3(Cu_2,Pb)S.Sb_2S_3$	5.7 — 5.9
Bromyrite, AgBr	5.8 — 6.0
Brookite, TiO_2	3.87 — 4.01
Brown Coal	1.15 — 1.3
Brucite, $Mg(OH)_2$	2.38 — 2.40
Cadmium, Cd	8.60
Calamine, $H_2Zn_2SiO_5$	3.40 — 3.50
Calcite, $CaCO_3$	2.713
Cassiterite, SnO_2	6.8 — 7.1
Cast Iron	7.03 — 7.73
Celestite, $SrSO_4$	3.95 — 3.97
Cerargyrite, AgCl	5.55
Cerussite, $PbCO_3$	6.46 — 6.574
Chabazite, $(Na_2,Ca)Al_2Si_4O_{12}+6H_2O$	2.08 — 2.16
Chalcocite, Cu_2S	5.5 — 5.8
Chalcopyrite, $CuFeS_2$	4.1 — 4.3
Chondrodite, $H_2(Mg,Fe)_{10}Si_5O_{24}F_4$	3.1 — 3.2
Chromite, $FeCr_2O_4$	4.32 — 4.57
Chromium, Cr	6.50
Chrysoberyl, $BeAl_2O_4$	3.5 — 3.84
Chrysocolla, $CuSiO_3+2H_2O$	2.0 — 2.238
Chrysolite, $(Mg,Fe)_2SiO_4$	3.27 — 3.37
Cinnabar, HgS	8.0 — 8.2
Clinochlore, $H_8Mg_5Al_2Si_3O_{18}$	2.65 — 2.78
Cobalt, Co	8.6
Cobaltite, CoAsS	6.0 — 6.3
Columbite, $(Fe,Mn)(Nb,Ta)_2O_6$	5.3 — 7.3
Copper, Cu, Native	8.8 — 8.9
Copper, Cu, Pure	8.92
Corundum, Al_2O_3	3.95 — 4.10
Crocoite, $PbCrO_4$	5.9 — 6.1
Cryolite, Na_3AlF_6	2.95 — 3.0
Cuprite, Cu_2O	5.85 — 6.15
Cyanite, Al_2SiO_5	3.56 — 3.67
Datolite, $HCaBSiO_5$	2.9 — 3.0
Diamond, C	3.516— 3.525
Diaspore, $Al_2O_3.H_2O$	3.3 — 3.5
Dolomite, $(Ca,Mg)CO_3$	2.8 — 2.9
Domeykite, Cu_3As	7.2 — 7.75
Electrum, $mAunAg$	15.6 —19.3
Enargite, Cu_3AsS_4	4.43 — 4.45
Epidote, $HCa_2(Al,Fe)_3Si_3O_{13}$	3.25 — 3.5
Erythrite, $Co_3As_2O_8+8H_2O$	2.948
Fluorite, CaF_2	3.01 — 3.25
Franklinite, $(Fe,Zn,Mn)O.(Fe,Mn)_2O_3$	5.07 — 5.22
Gahnite, $ZnAl_2O_4$	4.0 — 4.6
Galena, PbS	7.428
Garnet, $R_3R_2(SiO_4)_3$	3.15 — 4.3
Gersdorffite, NiAsS	5.6 — 6.2
Gibbsite, $Al(OH)_3$	2.3 — 2.4
Gmelinite, $(Na_2,Ca)Al_2Si_4O_{12}+6H_2O$	2.04 — 2.17
Gold, Au, Native	15.6 —19.3
Gold, Au, Pure	19.32
Göthite, $Fe_2O_3.H_2O$	4.0 — 4.4
Graphite, C	2.09 — 2.23
Gypsum, $CaSO_4+2H_2O$	2.314— 2.328
Harmotome, $H_2(K_2,Ba)Al_2Si_5O_{16}+4H_2O$	2.44 — 2.50
Hematite, Fe_2O_3	4.9 — 5.3
Hessite, Ag_2Te	8.31 — 8.45
Ice, H_2O	0.9167
Ilmenite, $mFeTiO_3nFe_2O_3$	4.5 — 5.0
Iodyrite, AgI	5.6 — 5.7
Iridium, Ir	22.42
Iridosmine, $mIrnOs$	19.3 —21.12
Iron, Fe, Pure	7.86
Kaolinite, $2H_2O.Al_2O_3.2SiO_2$	2.6 — 2.63
Labradorite, $nNaAlSi_3O_8mCaAl_2Si_2O_8$	2.70 — 2.72
Laumontite, $H_4CaAl_2Si_4O_{14}+2H_2O$	2.25 — 2.36
Lead, Pb	11.37
Lepidolite, $KLi[Al,(OH,F)_2]Al(SiO_3)_3$	2.8 — 2.9
Limonite, $2Fe_2O_3.3H_2O$	3.6 — 4.0
Linnaeite, Co_3S_4	4.8 — 5.0
Magnesite, $MgCO_3$	3.0 — 3.12
Magnetite, $FeO.Fe_2O_3$	5.168— 5.180
Malachite, $Cu_2(OH)_2CO_3$	3.9 — 4.03
Manganese, Mn	7.39
Manganite, $Mn_2O_3.H_2O$	4.20 — 4.40
Marcasite, FeS_2	4.85 — 4.90
Mercury, Hg	13.596
Miargyrite, $AgSbS_2$	5.1 — 5.3
Millerite, NiS	5.3 — 5.65
Mimetite, $3Pb_3As_2O_8.PbCl_2$	7.0 — 7.25
Molybdenite, MoS_2	4.7 — 4.8
Muscovite, $H_2KAl_3(SiO_4)_3$	2.76 — 3.0
Naphtha	0.60 — 0.756
Niccolite, NiAs	7.33 — 7.67
Nickel, Ni	8.9
Oligoclase, $nNaAlSi_3O_8mCaAl_2Si_2O_8$	2.65 — 2.67
Opal, SiO_2nH_2O	1.9 — 2.3
Orpiment, As_2S_3	3.4 — 3.5
Orthoclase, $KAlSi_3O_8$	2.467— 2.619
Ozocerite,	0.85 — 0.90
Palladium, Pd	11.3 —11.8
Phlogopite, $(H,K,MgF)_2Mg_3Al(SiO_4)_3$	2.78 — 2.85
Pinite, Hydrous Alkaline Silicate from alteration	2.6 — 2.85
Platiniridium, $mPtnIr$	22.65 —22.84
Platinum, Pt, Native	14.0 —19.0
Platinum, Pt, Pure	21.50
Polybasite, Ag_9SbS_6	6.0 — 6.2
Prehnite, $H_2Ca_2Al_2Si_3O_{12}$	2.80 — 2.95
Proustite, Ag_3AsS_3	5.57 — 5.64
Psilomelane, H_4MnO_5	3.7 — 4.7
Pyrargyrite, Ag_3SbS_3	5.77 — 5.86
Pyrite, FeS_2	4.95 — 5.10
Pyrolusite, MnO_2	4.82
Pyromorphite, $3Pb_3P_2O_8.PbCl_2$	6.5 — 7.1
Pyroxene, $RSiO_3$	3.2 — 3.6
Pyrrhotite, $Fe_{11}S_{12}$	4.58 — 4.64
Quartz, SiO_2	2.653— 2.660
Realgar, AsS	3.556
Rhodochrosite, $MnCO_3$	3.45 — 3.60
Rhodonite, $MnSiO_3$	3.4 — 3.68
Rutile, TiO_2	4.18 — 4.25
Scheelite, $CaWO_4$	5.9 — 6.1
Serpentine, $H_4Mg_3Si_2O_9$	2.50 — 2.65
Siderite, $FeCO_3$	3.83 — 3.88
Silver, Ag, Native	10.1 —11.1
Silver, Ag, Pure	10.53
Smaltite, $CoAs_2$	6.4 — 6.6
Smithsonite, $ZnCO_3$	4.30 — 4.45
Sphalerite, (Blende) ZnS	3.9 — 4.1
Spinel, $MgAl_2O_4$	3.5 — 4.1
Spodumene, $LiAl(SiO_3)_2$	3.13 — 3.20
Staurolite, $H_4(Fe,Mg)_2(Al,Fe)_{24}Si_{11}O_{48}$	3.65 — 3.75
Steel	7.60 — 7.80
Stephanite, Ag_5SbS_4	6.2 — 6.3
Stibnite, Sb_2S_3	4.52 — 4.62
Stilbite, $H_4(Na_2,Ca)Al_2Si_6O_{16}+4H_2O$	2.094— 2.205
Strontianite, $SrCO_3$	3.680— 3.714
Sulphur, S	2.07 — 2.09
Sylvanite, $(Au,Ag)Te_2$	7.9 — 8.3
Talc, $H_2Mg_3Si_4O_{12}$	2.7 — 2.8
Tenorite, CuO	5.825— 6.25
Tephroite, Mn_2SiO_4	4.0 — 4.12
Tetradymite, $Bi_2(Te,S)_3$	7.2 — 7.6
Tetrahedrite, $4Cu_2S.Sb_2S_3$	4.4 — 5.1
Tin, Sn	7.29
Titanite, $CaTiSiO_5$	3.4 — 3.56
Topaz, $[Al(O,F_2)]AlSiO_4$	3.4 — 3.65
Tourmaline, $[(Na,Li,K)_x.(MgFe,Ca)_3$ or $(Al,B,Cr,Fe)_2]SiO_3$	2.98 — 3.20
Turgite, $2Fe_2O_3.H_2O$	4.29 — 4.49
Valentinite, Sb_2O_3	5.566
Vivianite, $Fe_3P_2O_8+8H_2O$	2.58 — 2.68
Wad, Impure hydrous oxide of manganese	3.0 — 4.26
Willemite, Zn_2SiO_4	3.89 — 4.18
Witherite, $BaCO_3$	4.29 — 4.35
Wolframite, $(Fe.Mn)WO_4$	7.2 — 7.5
Wrought Iron	7.79 — 7.85
Wulfenite, $PbMoO_4$	6.7 — 7.0
Zaratite, $NiCo_2.2Ni(OH)_2+4H_2O$	2.57 — 2.69
Zinc	7.15
Zincite, ZnO	5.43 — 5.7
Zircon, $ZrSiO_4$	4.68 — 4.70

Weight of Broken Ore.

This is important in figuring for a mill and in comparing work at various places. For example, in estimating the tonnage capacity of crushing machinery, the specific gravity of the ore, or in other words, its volume, must be considered as well as its hardness.

The weight of a cubic foot of crushed rock depends on the manner of crushing. As a rule, the finer it is, the less the weight. A mixture of coarse and fine will weigh more per cubic foot than either coarse or fine separately. The weight of coarse ore per cubic foot may be calculated from the volume of the skip or car and the weight of its contents; for fine stuff a little box holding exactly one cubic foot is to be recommended

Vezin's rule (probably for ore crushed fairly fine) is that the weight of mixed coarse and fine crushed ore is 57% of the weight of uncrushed ore, or the volume is increased, by crushing, to one and three-fourths times the volume of solid rock. The specific gravity of galena is 7.5 and that of quartz is 2.62. Then the specific gravity of an ore containing 15% galena and 85% quartz, before crushing, would be $0.15 \times 7.5 + 0.85 \times 2.62$ or 3.335. The specific gravity, after crushing, would be 57% of 3.335 or 1.9. Taking the weight of a cubic foot of water as 62.5 pounds then the crushed ore would weigh 62.5×1.9 or 118.7 pounds. For the ore coming to Mill 94, Vezin estimated that one cubic foot, after being crushed to about ⅛-inch size, would weigh 90 pounds or there would be 22.2 cubic feet per ton.

Kirby[207] states that ores in place are full of small fractures and may be spongy or porous so that they will not weigh as much as solid compact specimens of mineral. His figures are given in Table 403. Oxidized ores in place cannot be well calculated and their weight should be determined in each case by actual test. Broken ore on dumps in pieces ranging from the size of one's head to gravel contains from 35 to 50% interstitial spaces, that is, the weight of the broken ore is from 50 to 65% of the weight of the ore in place.

TABLE 403.—KIRBY'S VALUES FOR ORE IN PLACE.

Material.	Weight per Cubic Foot.		Cubic Feet per Ton.	
	Theoretically* Pounds.	Practically. Pounds.	Theoretically.*	Practically.
Galena	465	426	4.3	4.7
Pyrite	313	286	6.4	7.0
Blende	250	235	8.0	8.5
Hematite	303	267	6.6	7.5
Limonite	238	213	8.4	9.4
Dolomite	175	160	11.4	12.5
Limestone, andesite, syenite	168	154	11.9	13.0
Vein quarts, granite and granitic rocks	168	148	11.9	13.5
Clay, quartz, porphyry, trachytes, rhyolites, etc.	163	138	12.3	14.5
Vein quarts, with 15% galena	187	164	10.7	12.2
Vein quartz with 15% pyrites	180	160	11.1	12.5
Vein quartz with 10% hematite	175	155	11.4	12.9

*Calculated from average specific gravity for pure unaltered specimens.

McDonald's[208] figures are given in Table 404. These values are probably for ore as it comes to the mill.

TABLE 404.—MCDONALD'S FIGURES ON WEIGHT OF ORE.

Material.	Weight per Cubic Foot.		Cubic Feet per Ton.	
	In Place. Pounds.	Broken. Pounds.	In Place.	Broken.
Granite and porphyry	170	97	11.8	20.6
Gneiss	168	96	11.9	20.8
Greenstone and trap	187	107	10.7	18.7
Limestone	168	96	11.9	20.8
Slate	175	95	11.4	21.1
Quartz	165	94	12.1	21.3
Sandstone	151	86	13.2	23.3
Earth in bank	111	—	18.0	—
Earth dry and loose	—	74	—	27.0
Clay	118	—	17.0	—
Sand	80	—	25.0	—

Further quotations from various sources are given in Table 405.

TABLE 405.—MISCELLANEOUS FIGURES ON THE WEIGHT OF BROKEN ORE.

Weight per Cubic Foot. Pounds.	Cubic Feet per Ton.	Material.
100	20	Mine ore coming to Mill 57.[161]
100	20	Tailings of Mill 44.
100	20	"Blue ground" (altered peridotite) as it comes from the Kimberly mines, South Africa.[196]
96	20.8	Broken quartz as it comes from the Jumpers' Deep mine, South Africa.[417]
95	21.1	Broken quartz conglomerate as it comes from the Ferreira mine, South Africa.[413]
87	23	Material from gravity stamps.[21]
77	26	Material from gravity stamps, with the slimes removed.[21]
75	26⅔	Quartz stamped dry through 40 mesh and charged dry into vats at the Victoria mill, Hauraki peninsula, New Zealand.[207]

TABLE 406.—FOR CONVERTING SLOPE IN DEGREES TO SLOPE IN INCHES.

NOTE.—The column headed "Inches per Inch" is also the geometrical tangent of the angle. The tangent should always be used in figuring slope angles in preference to the sine. By moving the decimal point in this column two places to the right the slope is then expressed as so much in one hundred, or, in other words, as per cent. The last column is intended for use on vanners and as the steepest vanner found by the author in the mills sloped only 1½ inches per foot it was not considered necessary to continue this column in the table beyond 2 inches per foot.

Degrees.	Inches per Inch.	Inches per Foot.	Inches per 12 Feet.	Degrees.	Inches per Inch.	Inches per Foot.	Inches per 12 Feet.
0° 5′	.00145	.01745	.20938	50′	.08456	1.01470	12.17635
10′	.00291	.03490	.41875	55′	.08602	1.03228	12.38731
15′	.00436	.05236	.62827	5° 0′	.08749	1.04986	12.59827
20′	.00582	.06980	.83765	5′	.08895	1.06745	12.80938
25′	.00727	.08726	1.04717	10′	.09042	1.08504	13.02048
30′	.00873	.10471	1.25654	15′	.09189	1.10264	13.23173
35′	.01018	.12217	1.46606	20′	.09335	1.12025	13.44298
40′	.01164	.13963	1.67558	25′	.09482	1.13785	13.65422
45′	.01309	.15708	1.88496	30′	.09629	1.15547	13.86562
50′	.01455	.17454	2.09448	35′	.09776	1.17308	14.07701
55′	.01600	.19200	2.30400	40′	.09923	1.19070	14.28840
1° 0′	.01746	.20946	2.51352	45′	.10069	1.20833	14.49994
5′	.01891	.22692	2.72304	50′	.10216	1.22597	14.71162
10′	.02037	.24438	2.93256	55′	.10363	1.24361	14.92330
15′	.02182	.26184	3.14208	6° 0′	.10510	1.26125	15.13498
20′	.02328	.27930	3.35160	5′	.10658	1.27890	15.34680
25′	.02473	.29676	3.56112	10′	.10805	1.29655	15.55862
30′	.02619	.31422	3.77064	15′	.10952	1.31420	15.77045
35′	.02764	.33169	3.98030	20′	.11099	1.33187	15.98242
40′	.02910	.34916	4.18997	25′	.11246	1.34954	16.19453
45′	.03055	.36662	4.39949	30′	.11394	1.36722	16.40664
50′	.03201	.38410	4.60915	35′	.11541	1.38491	16.61890
55′	.03346	.40157	4.81882	40′	.11688	1.40260	16.83115
2° 0′	.03492	.41904	5.02848	45′	.11836	1.42028	17.04341
5′	.03638	.43652	5.23829	50′	.11983	1.43798	17.25581
10′	.03783	.45400	5.44795	55′	.12131	1.45570	17.46835
15′	.03929	.47148	5.65776	7° 0′	.12278	1.47341	17.68090
20′	.04075	.48895	5.86742	5′	.12426	1.49113	17.89358
25′	.04220	.50644	6.07723	10′	.12574	1.50886	18.10627
30′	.04366	.52392	6.28704	15′	.12722	1.52659	18.31910
35′	.04512	.54142	6.49699	20′	.12869	1.54433	18.53194
40′	.04658	.55890	6.70680	25′	.13017	1.56208	18.74491
45′	.04803	.57640	6.91675	30′	.13165	1.57982	18.95789
50′	.04949	.59389	7.12670	35′	.13313	1.59758	19.17101
55′	.05095	.61139	7.33666	40′	.13461	1.61534	19.38413
3° 0′	.05241	.62888	7.54661	45′	.13609	1.63313	19.59754
5′	.05387	.64639	7.75670	50′	.13758	1.65090	19.81080
10′	.05533	.66390	7.96680	55′	.13906	1.66870	20.02435
15′	.05678	.68141	8.17690	8° 0′	.14054	1.68648	20.23776
20′	.05824	.69892	8.38700	5′	.14202	1.70429	20.45146
25′	.05970	.71642	8.59709	10′	.14351	1.72210	20.66515
30′	.06116	.73394	8.80733	15′	.14499	1.73992	20.87899
35′	.06262	.75146	9.01757	20′	.14648	1.75774	21.09283
40′	.06408	.76899	9.22781	25′	.14796	1.77557	21.30682
45′	.06554	.78652	9.43819	30′	.14945	1.79341	21.52094
50′	.06700	.80405	9.64858	35′	.15094	1.81126	21.73507
55′	.06847	.82158	9.85896	40′	.15243	1.82911	21.94934
4° 0′	.06993	.83911	10.06934	45′	.15391	1.84497	22.16362
5′	.07139	.85666	10.27987	50′	.15540	1.86485	22.37818
10′	.07285	.87420	10.49040	55′	.15689	1.88272	22.59259
15′	.07431	.89174	10.70093	9° 0′	.15838	1.90061	22.80730
20′	.07578	.90930	10.91160	5′	.15988	1.91850	23.02200
25′	.07724	.92686	11.12228	10′	.16137	1.93640	23.23685
30′	.07870	.94441	11.33294	15′	.16286	1.95432	23.45184
35′	.08017	.96198	11.54376	20′	.16435	1.97224	23.66683
40′	.08163	.97955	11.75458	25′	.16585	1.99016	23.88197
45′	.08309	.99712	11.96539	30′	.16734	2.00810	24.09725

Degrees.	Inches per Inch.	Inches per Foot.	Degrees.	Inches per Inch.	Inches per Foot.
35′	.16884	2.02606	35′	.29780	3.57355
40′	.17033	2.04401	40′	.29938	3.59256
45′	.17183	2.06197	45′	.30097	3.61158
50′	.17333	2.07995	50′	.30255	3.63062
55′	.17483	2.09792	55′	.30414	3.64969
10° 0′	.17633	2.11592	17° 0′	.30573	3.66876
5′	.17783	2.13392	5′	.30732	3.68785
10′	.17933	2.15192	10′	.30891	3.70697
15′	.18083	2.16995	15′	.31051	3.72610
20′	.18233	2.18797	20′	.31210	3.74524
25′	.18384	2.20602	25′	.31370	3.76440
30′	.18534	2.22407	30′	.31530	3.78358
35′	.18684	2.24212	35′	.31690	3.80278
40′	.18835	2.26019	40′	.31850	3.82199
45′	.18986	2.27826	45′	.32010	3.84122
50′	.19136	2.29636	50′	.32171	3.86047
55′	.19287	2.31445	55′	.32331	3.87974
11° 0′	.19438	2.33256	18° 0′	.32492	3.89903
5′	.19589	2.35068	5′	.32653	3.91834
10′	.19740	2.36880	10′	.32814	3.93766
15′	.19891	2.38694	15′	.32975	3.95700
20′	.20042	2.40509	20′	.33136	3.97636
25′	.20194	2.42326	25′	.33298	3.99574
30′	.20345	2.44142	30′	.33460	4.01514
35′	.20497	2.45960	35′	.33621	4.03456
40′	.20648	2.47780	40′	.33783	4.05400
45′	.20800	2.49600	45′	.33945	4.07345
50′	.20952	2.51422	50′	.34108	4.09292
55′	.21104	2.53243	55′	.34270	4.11241
12° 0′	.21256	2.55067	19° 0′	.34433	4.13192
5′	.21408	2.56892	5′	.34596	4.15146
10′	.21560	2.58718	10′	.34758	4.17101
15′	.21712	2.60545	15′	.34922	4.19058
20′	.21864	2.62373	20′	.35085	4.21018
25′	.22017	2.64203	25′	.35248	4.22978
30′	.22169	2.66033	30′	.35412	4.24942
35′	.22322	2.67865	35′	.35576	4.26907
40′	.22475	2.69698	40′	.35740	4.28874
45′	.22628	2.71531	45′	.35904	4.30843
50′	.22781	2.73367	50′	.36068	4.32815
55′	.22934	2.75203	55′	.36232	4.34789
13° 0′	.23087	2.77042	20° 0′	.36397	4.36764
5′	.23240	2.78880	5′	.36562	4.38742
10′	.23393	2.80721	10′	.36727	4.40722
15′	.23547	2.82562	15′	.36892	4.42703
20′	.23700	2.84405	20′	.37057	4.44686
25′	.23854	2.86249	25′	.37223	4.46672
30′	.24008	2.88094	30′	.37388	4.48661
35′	.24162	2.89940	35′	.37554	4.50652
40′	.24316	2.91788	40′	.37720	4.52644
45′	.24470	2.93638	45′	.37887	4.54639
50′	.24624	2.95488	50′	.38053	4.56636
55′	.24778	2.97340	55′	.38220	4.58635
14° 0′	.24933	2.99194	21° 0′	.38386	4.60637
5′	.25087	3.01048	5′	.38553	4.62640
10′	.25242	3.02904	10′	.38721	4.64646
15′	.25397	3.04760	15′	.38888	4.66654
20′	.25552	3.06619	20′	.39055	4.68665
25′	.25707	3.08479	25′	.39223	4.70677
30′	.25862	3.10340	30′	.39391	4.72692
35′	.26017	3.12203	35′	.39559	4.74709
40′	.26172	3.14068	40′	.39727	4.76729
45′	.26328	3.15934	45′	.39896	4.78751
50′	.26483	3.17800	50′	.40065	4.80775
55′	.26639	3.19668	55′	.40234	4.82802
15° 0′	.26795	3.21539	22° 0′	.40403	4.84831
5′	.26951	3.23410	5′	.40572	4.86863
10′	.27107	3.25283	10′	.40741	4.88896
15′	.27263	3.27157	15′	.40911	4.90932
20′	.27419	3.29033	20′	.41081	4.92971
25′	.27576	3.30910	25′	.41251	4.95012
30′	.27732	3.32789	30′	.41421	4.97056
35′	.27889	3.34669	35′	.41592	4.99102
40′	.28046	3.36551	40′	.41763	5.01150
45′	.28203	3.38435	45′	.41933	5.03201
50′	.28360	3.40319	50′	.42105	5.05255
55′	.28517	3.42206	55′	.42276	5.07311
16° 0′	.28675	3.44094	23° 0′	.42447	5.09369
5′	.28832	3.45984	5′	.42619	5.11430
10′	.28990	3.47875	10′	.42791	5.13494
15′	.29147	3.49768	15′	.42963	5.15560
20′	.29305	3.51662	20′	.43136	5.17628
25′	.29463	3.53558	25′	.43308	5.19701
30′	.29621	3.55456	30′	.43481	5.21774

Digitized by Google

Degrees.	Inches per Inch.	Inches per Foot.
35′	.43654	5.23850
40′	.43828	5.25930
45′	.44001	5.28012
50′	.44175	5.30096
55′	.44349	5.32184
24° 0′	.44523	5.34274
5′	.44697	5.36366
10′	.44872	5.38462
15′	.45047	5.40560
20′	.45222	5.42660
25′	.45397	5.44764
30′	.45573	5.46871
35′	.45748	5.48980
40′	.45924	5.51092
45′	.46101	5.53207
50′	.46277	5.55325
55′	.46454	5.57446
25° 0′	.46631	5.59568
5′	.46808	5.61695
10′	.46985	5.63824
15′	.47163	5.65956
20′	.47341	5.68091
25′	.47519	5.70229
30′	.47698	5.72370
35′	.47876	5.74514
40′	.48055	5.76661
45′	.48234	5.78810
50′	.48414	5.80963
55′	.48593	5.83120
26° 0′	.48773	5.85278
5′	.48953	5.87441
10′	.49134	5.89606
15′	.49315	5.91774
20′	.49495	5.93945
25′	.49677	5.96119
30′	.49858	5.98297
35′	.50040	6.00478
40′	.50222	6.02662
45′	.50404	6.04849
50′	.50587	6.07039
55′	.50769	6.09233
27° 0′	.50953	6.11430
5′	.51136	6.13630
10′	.51320	6.15834
15′	.51503	6.18040
20′	.51688	6.20250
25′	.51872	6.22463
30′	.52057	6.24680
35′	.52242	6.26900
40′	.52427	6.29123
45′	.52613	6.31350
50′	.52798	6.33580
55′	.52985	6.35814
28° 0′	.53171	6.38051
5′	.53358	6.40291
10′	.53545	6.42535
15′	.53732	6.44783
20′	.53920	6.47034
25′	.54107	6.49289
30′	.54296	6.51546
35′	.54484	6.53808
40′	.54673	6.56074
45′	.54862	6.58342
50′	.55051	6.60614
55′	.55241	6.62891
29° 0′	.55431	6.65171
5′	.55621	6.67453
10′	.55812	6.69740
15′	.56003	6.72031
20′	.56194	6.74327
25′	.56385	6.76625
30′	.56577	6.78926
35′	.56769	6.81233
40′	.56962	6.83543
45′	.57155	6.85856
50′	.57348	6.88174
55′	.57541	6.90494
30° 0′	.57735	6.92820
5′	.57929	6.95149
10′	.58124	6.97482
15′	.58318	6.99818
20′	.58513	7.02160
25′	.58709	7.04504
30′	.58905	7.06854
35′	.59101	7.09206
40′	.59297	7.11563
45′	.59494	7.13924
50′	.59691	7.16290
55′	.59888	7.18658
31° 0′	.60086	7.21032
5′	.60284	7.23409
10′	.60483	7.25791
15′	.60681	7.28177
20′	.60881	7.30567
25′	.61080	7.32961
30′	.61280	7.35360
35′	.61480	7.37764
40′	.61681	7.40171
45′	.61882	7.42582
50′	.62083	7.44998
55′	.62285	7.47418
32° 0′	.62487	7.49843
5′	.62689	7.52272
10′	.62892	7.54705
15′	.63095	7.57144
20′	.63299	7.59586
25′	.63503	7.62032
30′	.63707	7.64484
35′	.63912	7.66939
40′	.64117	7.69400
45′	.64322	7.71865
50′	.64528	7.74335
55′	.64734	7.76809
33° 0′	.64941	7.79288
5′	.65148	7.81772
10′	.65355	7.84261
15′	.65563	7.86754
20′	.65771	7.89252
25′	.65980	7.91755
30′	.66189	7.94262
35′	.66398	7.96775
40′	.66608	7.99291
45′	.66818	8.01814
50′	.67028	8.04341
55′	.67239	8.06873
34° 0′	.67451	8.09410
5′	.67663	8.11951
10′	.67875	8.14499
15′	.68088	8.17050
20′	.68301	8.19607
25′	.68514	8.22169
30′	.68728	8.24737
35′	.68942	8.27309
40′	.69157	8.29886
45′	.69372	8.32469
50′	.69588	8.35057
55′	.69804	8.37650
35° 0′	.70021	8.40248
5′	.70238	8.42852
10′	.70455	8.45461
15′	.70673	8.48076
20′	.70891	8.50696
25′	.71110	8.53320
30′	.71329	8.55952
35′	.71549	8.58588
40′	.71769	8.61229
45′	.71990	8.63876
50′	.72211	8.66528
55′	.72432	8.69186
36° 0′	.72654	8.71850
5′	.72877	8.74520
10′	.73100	8.77195
15′	.73323	8.79876
20′	.73547	8.82563
25′	.73771	8.85254
30′	.73996	8.87953
35′	.74221	8.90657
40′	.74447	8.93366
45′	.74674	8.96082
50′	.74900	8.98804
55′	.75128	9.01531
37° 0′	.75355	9.04265
5′	.75584	9.07003
10′	.75812	9.09749
15′	.76042	9.12500
20′	.76272	9.15258
25′	.76502	9.18022
30′	.76733	9.20792
35′	.76964	9.23568
40′	.77196	9.26350

Degrees.		Inches per Inch.	Inches per Foot.	Degrees.		Inches per Inch.	Inches per Foot.
	45′	.77428	9.29138		25′	.88214	10.58562
	50′	.77661	9.31933		30′	.88473	10.61670
	55′	.77895	9.34735		35′	.88732	10.64785
38°	0′	.78129	9.37542		40′	.88992	10.67909
	5′	.78363	9.40356		45′	.89253	10.71041
	10′	.78598	9.43176		50′	.89515	10.74180
	15′	.78834	9.46003		55′	.89777	10.77328
	20′	.79070	9.48836	42°	0′	.90040	10.80485
	25′	.79306	9.51677		5′	.90304	10.83649
	30′	.79544	9.54522		10′	.90569	10.86822
	35′	.79781	9.57376		15′	.90834	10.90003
	40′	.80020	9.60235		20′	.91099	10.93193
	45′	.80258	9.63101		25′	.91366	10.96391
	50′	.80498	9.65975		30′	.91633	10.99597
	55′	.80738	9.68854		35′	.91901	11.02812
39°	0′	.80978	9.71741		40′	.92170	11.06035
	5′	.81220	9.74634		45′	.92439	11.09269
	10′	.81461	9.77533		50′	.92709	11.12509
	15′	.81703	9.80441		55′	.92980	11.15759
	20′	.81946	9.83354	43°	0′	.93252	11.19018
	25′	.82190	9.86275		5′	.93524	11.22286
	30′	.82434	9.89203		10′	.93797	11.25562
	35′	.82678	9.92138		15′	.94071	11.28847
	40′	.82923	9.95080		20′	.94345	11.32141
	45′	.83169	9.98029		25′	.94620	11.35445
	50′	.83415	10.00985		30′	.94896	11.38757
	55′	.83662	10.03949		35′	.95173	11.42078
40°	0′	.83910	10.06919		40′	.95451	11.45410
	5′	.84158	10.09897		45′	.95729	11.48749
	10′	.84407	10.12882		50′	.96008	11.52098
	15′	.84656	10.15874		55′	.96288	11.55457
	20′	.84906	10.18874	44°	0′	.96569	11.58826
	25′	.85157	10.21882		5′	.96850	11.62204
	30′	.85408	10.24896		10′	.97133	11.65591
	35′	.85660	10.27919		15′	.97416	11.68987
	40′	.85912	10.30949		20′	.97700	11.72394
	45′	.86166	10.33986		25′	.97984	11.75810
	50′	.86419	10.37030		30′	.98270	11.79236
	55′	.86674	10.40083		35′	.98556	11.82672
41°	0′	.86929	10.43143		40′	.98843	11.86117
	5′	.87184	10.46212		45′	.99131	11.89573
	10′	.87441	10.49287		50′	.99420	11.93039
	15′	.87698	10.52371		55′	.99710	11.96514
	20′	.87955	10.55462	45°	0′	1.00000	12.00000

TABLE 407.—GAUGES FOR WIRE AND PLATE.

NOTE.—Fraser & Chalmers' Catalogue No. 7, pp. 8, 9, 25, (Third Edition) gives I., II., III., IV., V., VI., VII., X. Kent's Mechanical Engineers' Pocket-book, p. 28, gives I., II., III., IV., VIII., IX. Smith, Oberlin, "Press Working of Metals," pp. 103, 105, gives I., II., III., IV., V., VI., IX. Smith also gives Birmingham iron sheet gauge; Needle-wire in England; Music-wire in England; Whitworth's English Standard; Birmingham for sheets not Iron or Steel; Lancashire, One of Holtzapffels; Warrington or Rylands; French, Jauge de Limoges; French, for galvanized iron. Tyler Wire Works Co., Catalogue No. 14, (1896), p. 8, gives I., II., III., VI.

Number of Gauge.	I. American, or Brown & Sharpe.		II. Birmingham, or Stubbs. English Standard.		III. Washburn & Moen Mfg. Co., or Roebling's.		IV. Trenton Iron Co., Trenton, N. J.		V. G. W. Prentiss, Holyoke, Mass.	
	Inches.	Mm.	Inches.	Mm.	Inches.	Mm.	Inches.	Mm.	Inches.	Mm.
000000	—	—	—	—	.46	11.684	—	—	—	—
00000	—	—	—	—	.43	10.922	.45	11.431	—	—
0000	.46	11.684	.454	11.531	.393	9.982	.40	10.160	—	—
000	.40964	10.404	.425	10.795	.362	9.194	.36	9.144	.3586	9.108
00	.3648	9.265	.38	9.652	.331	8.407	.33	8.382	.3282	8.336
0	.32486	8.251	.34	8.636	.307	7.797	.305	7.747	.2994	7.604
1	.2893	7.348	.3	7.620	.283	7.188	.285	7.239	.2777	7.053
2	.25763	6.543	.284	7.213	.263	6.680	.265	6.731	.2591	6.581
3	.22942	5.827	.259	6.578	.244	6.197	.245	6.223	.2401	6.098
4	.20431	5.189	.238	6.045	.225	5.715	.225	5.715	.223	5.664
5	.18194	4.621	.22	5.588	.207	5.257	.205	5.207	.2047	5.199
6	.16202	4.115	.203	5.156	.192	4.876	.19	4.826	.1885	4.787
7	.14428	3.664	.18	4.572	.177	4.495	.175	4.445	.1785	4.533
8	.12849	3.263	.165	4.191	.162	4.114	.16	4.064	.1605	4.076
9	.11443	2.906	.148	3.759	.148	3.759	.145	3.683	.1471	3.736
10	.10189	2.588	.134	3.403	.135	3.429	.13	3.302	.1351	3.431
11	.09074	2.304	.12	3.048	.12	3.048	.1175	2.984	.1205	3.060
12	.08081	2.052	.109	2.768	.105	2.667	.105	2.667	.1065	2.705
13	.07196	1.827	.095	2.413	.092	2.336	.0925	2.349	.0928	2.357
14	.06408	1.627	.083	2.108	.08	2.032	.08	2.032	.0816	2.072
15	.05707	1.449	.072	1.828	.072	1.828	.07	1.778	.0726	1.844
16	.05082	1.290	.065	1.651	.063	1.600	.061	1.549	.0627	1.592
17	.04526	1.149	.058	1.473	.054	1.371	.0525	1.333	.0546	1.386
18	.0403	1.0236	.049	1.2446	.047	1.1938	.045	1.1430	.0478	1.2141

Number of Gauge.	I. American, or Brown & Sharpe.		II. Birmingham, or Stubbs. English Standard.		III. Washburn & Moen Mfg. Co., or Roebling's.		IV. Trenton Iron Co., Trenton, N. J.		V. G. W. Prentiss, Holyoke, Mass.	
	Inches.	Mm.	Inches.	Mm.	Inches.	Mm.	Inches.	Mm.	Inches.	Mm.
19	.03589	.9116	.042	1.0668	.041	1.0414	.04	1.0160	.0411	1.0439
20	.03196	.8117	.035	.8890	.035	.8890	.035	.8890	.0351	.8915
21	.02846	.7228	.032	.8128	.032	.8128	.031	.7874	.0321	.8153
22	.02535	.6438	.028	.7112	.028	.7112	.028	.7112	.029	.7366
23	.02257	.5732	.025	.6350	.025	.6350	.025	.6350	.0261	.6629
24	.0201	.5105	.022	.5588	.023	.5842	.0225	.5715	.0231	.5867
25	.0179	.4546	.02	.5080	.02	.5080	.02	.5080	.0212	.5384
26	.01594	.4048	.018	.4572	.018	.4572	.018	.4572	.0194	.4927
27	01419	.3604	.016	.4064	.017	.4318	.017	.4318	.0182	.4622
28	.01264	.3210	.014	.3556	.016	.4064	.016	.4064	.017	.4318
29	.01126	.2860	.013	.3302	.015	.3810	.015	.3810	.0163	.4140
30	.01002	.2545	.012	.3048	.014	.3556	.014	.3556	.0156	.3962
31	.00893	.2268	.01	.2540	.0135	.3429	.013	.3302	.0146	.3708
32	.00795	.2019	.009	.2286	.013	.3302	.012	.3048	.0136	.3454
33	.00708	.1798	.008	.2032	.011	.2794	.011	.2794	.013	.3302
34	.0063	.1600	.007	.1778	.01	.2540	.01	.2540	.0118	.2997
35	.00561	.1424	.005	.1270	.0095	.2413	.0095	.2413	.0109	.2768
36	.005	.1270	.004	1016	.009	.2286	.009	.2286	.01	.2540
37	.00445	.1130	—	—	.0085	.2159	.0085	.2159	.0095	.2413
38	.00396	.1005	—	—	.008	.2032	.008	.2032	.009	.2286
39	.00353	.0896	—	—	.0075	.1905	.0075	.1905	.0083	.2108
40	.00314	.0797	—	—	.007	.1778	.007	.1778	.0078	.1981

Number of Gauge.	VI. Old English for Brass.		VII. Russia Iron.		VIII. U. S. Standard for Sheet and Plate Iron and Steel.		IX. British Imperial Wire Gauge. Legal Standard.		X. Needle Wire.	
	Inches.	Mm.	Inches.	Mm.	Inches.	Mm.	Inches.	Mm.	Inches.	Mm.
000000	—	—	—	—	.469	11.912	.464	11.785	—	—
00000	—	—	—	—	.438	11.125	.432	10.792	—	—
0000	.454	11.531	—	—	.406	10.312	.4	10.160	—	—
000	.425	10.795	—	—	.375	9.525	.372	9.448	—	—
00	.380	9.652	—	—	.344	8.737	.348	8.839	—	—
0	.340	8.636	—	—	.313	7.950	.324	8.229	—	—
1	.300	7.620	—	—	.281	7.137	.3	7.620	.058	1.47
2	.284	7.213	—	—	.266	6.756	.276	7.010	.049	1.25
3	.259	6.578	—	—	.25	6.350	.252	6.400	.042	1.07
4	.238	6.045	—	—	.234	5.943	.232	5.892	.035	0.89
5	.220	5.588	—	—	.219	5.562	.212	5.384	.029	0.74
6	.203	5.156	—	—	.203	5.156	.192	4.876	.027	0.69
7	.180	4.572	.013	.3302	.188	4.775	.176	4.470	.024	0.61
8	.165	4.191	.014	.3556	.172	4.369	.16	4.064	.022	0.56
9	.148	3.759	.016	.4064	.156	3.962	.144	3.657	.020	0.51
10	.134	3.403	.018	.4572	.141	3.581	.128	3.251	.018	0.46
11	.120	3.048	—	—	.125	3.175	.116	2.946	.0165	0.42
12	.109	2.768	.020	.5080	.109	2.768	.104	2.641	.015	0.38
13	.095	2.413	.021	.5334	.094	2.387	.092	2.336	—	—
14	.083	2.108	.022	.5588	.078	1.981	.08	2.032	—	—
15	.072	1.829	.024	.6096	.07	1.778	.072	1.828	—	—
16	.065	1.651	.026	.6604	.0625	1.587	.064	1.625	—	—
17	.058	1.473	.030	.7620	.0563	1.430	.056	1.422	—	—
18	.049	1.2446	—	—	.05	1.2700	.048	1.219	—	—
19	.040	1.0160	—	—	.0438	1.1125	.04	1.016	—	—
20	.035	.8890	—	—	.0375	.9525	.036	.914	—	—
21	.0315	.8001	—	—	.0344	.8737	.032	.812	—	—
22	.0295	.7493	—	—	.0313	.7950	.028	.711	—	—
23	.027	.6858	—	—	.0281	.7137	.024	.609	—	—
24	.025	.6350	—	—	.025	.6350	.022	.563	—	—
25	.023	.5842	—	—	.0219	.5562	.02	.508	—	—
26	.0205	.5207	—	—	.0188	.4775	.018	.457	—	—
27	.01875	.4762	—	—	.0172	.4368	.0164	.416	—	—
28	.0165	.4191	—	—	.0156	.3962	.0148	.375	—	—
29	.0155	.3937	—	—	.0141	.3581	.0136	.345	—	—
30	.01375	.3492	—	—	.0125	.3175	.0124	.314	—	—
31	.01225	.3111	—	—	.0109	.2768	.0116	.294	—	—
32	.01125	.2857	—	—	.0101	.2565	.0108	.274	—	—
33	.01025	.2603	—	—	.0094	.2387	.01	.254	—	—
34	.0095	.2413	—	—	.0086	.2184	.0092	.233	—	—
35	.009	.2286	—	—	.0078	.1981	.0084	.213	—	—
36	.0075	.1905	—	—	.007	.1778	.0076	.193	—	—
37	.0065	.1651	—	—	.0066	.1676	.0068	.172	—	—
38	.00575	.1460	—	—	.0063	.1600	.006	.152	—	—
39	.005	.1270	—	—	—	—	.0052	.132	—	—
40	.0045	.1143	—	—	—	—	.0048	.121	—	—

Values of Meshes in Screen Sizes.

As has been explained in §152 this method of designating screens indicates only the number of holes per linear inch but does not indicate the exact size of the hole, which will depend upon the size of wire used. The W. S. Tyler Company give a customer the choice of several sizes of wire for each mesh, but what they call their "mining wire cloth" has the sizes given in Table 408. According to the author's understanding of the matter these are the screens that a mining man will get who orders by mesh without designating the size of wire. Screens made by other companies will very likely show variations from these values. A rough rule in calculating the size of hole when the mesh is known, is to assume that the size of the hole is equal to the size of the wire. Thus a 10-mesh screen has 10 holes and 10 wires per inch and on the above assumption each hole would be 1/20 inch or 0.05 inch wide. How close this rule holds may be seen by studying the table.

TABLE 408.—TYLER'S "MINING WIRE CLOTH."

Iron or Steel.				Brass or Copper.			
Number of Meshes per Inch.	Washburn & Moen Gauge No. of Wire.	Size of Opening.		Number of Meshes per Inch.	Old English Gauge No. of Wire.	Size of Opening.	
		Inches.	Mm.			Inches.	Mm.
2	8	0.338	8.59	2	8	0.335	8.51
3	10	0.198	5.03	3	10	0.199	5.05
4	11	0.130	3.30	4	11	0.130	3.30
4	12	0.145	3.68	4	12	0.141	3.59
5	13	0.108	2.74	5	13	0.105	2.67
6	14	0.087	2.21	6	14	0.082	2.08
7	15	0.071	1.80	7	15	0.071	1.80
8	16	0.062	1.57	8	16	0.060	1.52
9	17	0.057	1.45	9	17	0.053	1.35
10	18	0.053	1.35	10	17	0.042	1.07
12	19	0.042	1.07	10	18	0.051	1.30
14	20	0.036	0.91	12	18	0.034	0.86
16	22	0.034	0.86	12	19	0.043	1.09
18	23	0.0305	0.77	14	19	0.031	0.79
20	24	0.027	0.69	14	20	0.036	0.91
22	24	0.022	0.56	16	20	0.0275	0.70
22	25	0.025	0.64	16	21	0.031	0.79
24	25	0.021	0.53	18	22	0.026	0.66
24	26	0.023	0.58	20	23	0.023	0.58
26	26	0.0205	0.52	22	24	0.0204	0.52
26	27	0.0215	0.55	24	25	0.0186	0.47
28	27	0.0187	0.47	26	26	0.0179	0.45
30	28	0.0173	0.44	28	27	0.0169	0.43
35	30	0.0145	0.37	30	27	0.0145	0.37
40	31	0.0115	0.29	35	28	0.0120	0.30
45	33	0.0112	0.28	35	29	0.0131	0.33
50	34	0.0100	0.25	40	30	0.0112	0.28
55	35	0.0086	0.22	45	31	0.0100	0.25
60	35	0.0072	0.18	50	32	0.0083	0.21
70	37	0.0058	0.15	60	35	0.0077	0.20
80	40	0.0053	0.14	70	37	0.0078	0.20
90	42	0.0044	0.11	80	38	0.0068	0.17
				90	39	0.0061	0.15

Miner's Inch Measure.

A miner's inch of water is the amount that flows out under a head of about 6 inches, through an opening one inch square in the vertical side wall of a measuring box. Thus an opening 2 inches high and 4 inches long would discharge 8 miner's inches. The measurement is only a rough one since the amount of water passing through will vary with the size and shape of the opening, the thickness of the plank through which the water flows, the head of the water above the opening, the distance of the opening above the bottom of the measuring box, and the character of the approaches and of the fall on the delivery side. Table 409 shows the discharge of a miner's inch in cubic feet per minute, under different conditions.[25] Further data is given by Bowie[4] and in the Tenth Census Report.[42]

TABLE 409.—VALUES OF A MINER'S INCH.*

Length of Opening in Inches.	Openings 2 Inches High.			Openings 4 Inches High.		
	Head to Center, 5 Inches.	Head to Center, 6 Inches.	Head to Center, 7 Inches.	Head to Center, 5 Inches.	Head to Center, 6 Inches.	Head to Center, 7 Inches.
	Cu. ft.	Cu. ft.	Cu. ft.	Cu. ft.	Cu. ft.	Cu. ft.
4	1.348	1.473	1.589	1.320	1.450	1.570
6	1.355	1.480	1.596	1.336	1.470	1.595
8	1.359	1.484	1.600	1.344	1.481	1.608
10	1.361	1.485	1.602	1.349	1.487	1.615
12	1.363	1.487	1.604	1.352	1.491	1.620
14	1.364	1.488	1.604	1.354	1.494	1.623
16	1.365	1.489	1.605	1.356	1.496	1.626
18	1.365	1.489	1.606	1.357	1.498	1.628
20	1.365	1.490	1.606	1.359	1.499	1.630
22	1.366	1.490	1.607	1.359	1.500	1.631
24	1.366	1.490	1.607	1.360	1.501	1.632
26	1.366	1.490	1.607	1.361	1.502	1.633
28	1.367	1.491	1.607	1.361	1.503	1.634
30	1.367	1.491	1.608	1.362	1.503	1.635
40	1.367	1.492	1.608	1.363	1.505	1.637
50	1.368	1.493	1.609	1.364	1.507	1.639
60	1.368	1.493	1.609	1.365	1.508	1.640
70	1.368	1.493	1.609	1.365	1.508	1.641
80	1.368	1.493	1.609	1.366	1.509	1.641
90	1.369	1.493	1.610	1.366	1.509	1.641
100	1.369	1.494	1.610	1.366	1.509	1.642

*The apertures from which these measurements were obtained were through material 1¼ inches thick, and the lower edge 2 inches above the bottom of the measuring box, thus giving full contraction.

Hydraulic Tables.

For data on flow of water in pipes, loss of head, etc., the reader is referred to Trautwine's Civil Engineers' Pocketbook.

Bibliography for the Appendix.

This will be found at the end of Chapter XXI.

INDEX.

A

Aaron, C. H.....226, 788, 1167, 1172, 1180
on galvanic couple to reduce base metals.... 783
Abadie, E. R.....165, 183, 224, 787, 1175
Abbott, J. W..... 220
Absorption of amalgam by copper plates..... 765
Accelerated jigs 510
Accelerated mechanism, air pressure and gravity. 537
cam and gravity in Stuts coal jig..... 537
cam and spring..... 537
disc motion 536
hammer and spring on Collom jigs..... 536
in jigs 533
Accessory apparatus 942
Acid water, effect of, on screens..... 173
in mills 751
methods of neutralizing 173
Acme guide 155
Action, continuous compared with intermittent, in Breakers 55
Action of Gates Breaker..... 29
jaw and spindle breakers..... 52
steam stamps, principle of..... 112
substances in a magnetic field..... 796
trommels 372
Adams, J. M.....223, 225, 230, 251, 290, 291, 477, 787
on life of retort 783
dimensions of Black Hills traps..... 772
form of riffles in mercury traps..... 772
slope of plates 746
splash plates 739
opinion on end and side-shake vanners...655, 656
W. J.....727, 787, 1172
Adhesion 831
De Beers Diamond Dressing Works, process of 831
Elmore process 831
use of, in dressing ores..... 4
Adjustment of rolls..... 71
Advantages and disadvantages of air as compared with water 825
of mercury wells and riffles containing mercury 771
Advantages of action of jaw breaker 55
action of spindle breaker..... 55
concentration 1
gravity stamps over rolls and grinders..... 222
hand breaking 12
high speed of rolls 32
large breakers 49
rolls of large diameter 83
sliding block mechanism 535
"A" frames for gravity stamps..... 153
Aggregation, mineral, effect of in dressing ores. 3
Agitation 890,
ratio, definition of 892
sizing followed by..... 665
sorting followed by..... 891
Agitators 891
wheel 780
Alkinite, specific gravity of..... 1188
Air, advantages and disadvantages as compared with water 825
concentrators, Clarkson-Stanfield centrifugal separator 820
Edison dusting chambers..... 816
Hochstedt apparatus 816
Pape-Henneberg separator 818
using a continuous blast of air..... 816
which project the particles by a force other than air blast 818
jigs 820
dry blanket 825
dry panning 825
Hooper pneumatic concentrator..... 820
Krom's pneumatic 524
Air jigs, Paddock..... 820
Air pressure and gravity..... 537
Alabama hematite ores, roasting tried on..... 814
Alaska Treadwell Gold Mining Company..... 1181
mill 1127, 1133
amalgam squeezer used by..... 781
mortar block in..... 148
weight of stamp blow in..... 220
Albertite, specific gravity of..... 1188
Albite, specific gravity of..... 1188
Alden breaker 59, 61
Alexandria Coal Company..... 1178
Alice Mill..... 1134
Alignment of rolls..... 71
Alleghany Iron Company, tests on brown hematite with Wetherill magnetic separators..... 809
Allevard, France, calcining spathic iron ore at.... 9
hand picking at 492
roasting spathic iron ore at..... 814
sizes of ore hand picked at..... 487
Allis Chalmers Company 1127, 1133
Allis Stamp 114, 116, 118, 142
details of cylinders, water used, and capacity. 126
dies 123
mortar housing 120
rings 122
screens 121
shaft 123
staves in 122
valve action 127
efficiency of..... 133
frame of 119
mortar housing for..... 119
power for 131
safety devices in 127
shaft of 123
steam cylinder, valves in..... 134
table of details of mortar..... 120
foundations and mortar beds..... 118
sills and girders 118
Alloues Copper Mine 492
Mill 1069, 1107, 1109, 1174
mortar housing lining for stamp..... 120
Alma Emmons Sludge Mill 902
"Alpha" De Laval cream separator..... 827
Alsing cylinder 224, 286, 294
Altenberg classifier 416, 475, 478
mine, Aachen, wash trommel used at..... 331
separation of tin ore at..... 9
Althans, E.....61, 112, 143, 230, 293, 729, 839, 1186
Aluminum, atomic weight of..... 1188
bronze cloth screen..... 174
plate screens 174
specific gravity of 1188
Amador County Mill, screens used in..... 174
Mill 228
Amalgam 730
Amalgam, absorption of, by copper plates..... 765
amount and value of, at the Cross mill..... 763
Amalgamated plates, amount of drop on..... 743
details of in mills..... 737
distributors and collectors used on..... 743
inside 178
materials of 747
outside 731
quality of copper for..... 747
slope of 744
speed of waves and thickness of films..... 746
Amalgamating new plates..... 752
Amalgamating pans 239, 777
bibliography for 290
continuous or Boss system 248
cost of 250
dies for 245
foundation frame, pan bottom and central cone 241

Amalgamating pans, grinding of..... 247
intermittent or tank system of working..... 248
loss of mercury in 250
lubricating of 247
method of running, in combination mills..... 249
power for 249
shoe and die channels in..... 246
sides, flange, ring, lining and covers..... 244
size of stuff treated by 248
spider, driver and cap, lubrication and grinding 247
steam jacket and steam pipe..... 243
uses and method of working..... 248
vertical and horizontal shafts of..... 247
wear and loss of iron and mercury in..... 249
weights of spider and driving cone in..... 247
wings, muller, shoes and pulp current of.... 245
Amalgamation 730, 891, 892, 1156
apparatus used for 731
bibliography for 787
combination process of..... 248
effect of temperature on..... 766
in a bottle 1157
loss of gold in 786
of gold, principle of..... 4
of silver ores..... 1167
plate 890
Reese River process of..... 248
Washoe process of..... 248
Amalgamators 775
amalgamating pans 777
Atwood 775
Eureka rubber 776
Gold King 777
Lazzio 777
Amalgam, bullion in, after squeezing..... 783
cleaning 780
distribution of 764
gold and silver in daily and hard..... 762
of gold 731
plain copper plates coated with..... 747
retorting 781
silver 731
sodium 730
specific gravity of..... 1188
squeezing 781
American ball pulverizer..... 224
bibliography for 295
Concentration Company, cam and spring used by 537
Developing and Mining Company..... 1028
rock breaker 59
Steel Manufacturers' Association.....173, 227
Ammeberg Mill 912, 1086
sieve scale at..... 367
Sweden 492
material of bottom bed at..... 574
removal of slimes by classifiers at..... 373
roasting for porosity at..... 329
separation of blende at..... 9
Utsch jig used at..... 520
Amount and temperature of the water in gravity stamps 221
of throw in jigs..... 594
Amphibole, specific gravity of..... 1188
Anaconda Copper Mining Company..77, 984, 1181, 1182
hydraulic classifier.....395, 476
details of in mills..... 396
Analcite, specific gravity of..... 1188
Analysis of Morison's curves of velocity of stamps 215
Anchor Mill roasting ore for magnetism in..... 814
speed rate of jigs in..... 592
Andalusite, specific gravity of..... 1188
Andesine, specific gravity of..... 1188
Andesite, weight of..... 1190
Andesitic breccia and phonolite, crushed at Florence, Colorado 103
Andree, Th 1177
Andrews' dredging pump 869
Angle of nip of rolls..... 89
Anglesite, specific gravity of..... 1188
Angleur, double discharges on jigs at..... 584
Anhydrite, specific gravity of..... 1188
Ankerite, specific gravity of..... 1188
Anna and Adalbert Works, Przibram..... 492
dressing works, Przibram.....1096, 1177
stamp mill, *spitzlutten* used at..... 423
Annealing copper plates, method of..... 747
Anorthite, specific gravity of..... 1188
Anthony, W. A..... 824
Anthracite, angle of nip required to crush..... 94
specific gravity of..... 1188
Antimony, atomic weight of..... 1188
specific gravity of..... 1188
Ansin Company, apparatus for air concentration. 817
Apatite, specific gravity of..... 1188
Apophyllite, specific gravity of..... 1188
Apparatus, accessory 942
used for amalgamation..... 731
Appendix, bibliography for..... 1197
Appleby, C. J..... 229
Appliances for conveying and elevating ore and water 899
Application of riffles..... 723
Apron plates 740
Aprons, used in feeding jigs..... 549
Aragonite, specific gravity of..... 1188
Arcadian Mill..... 151
Archer breaker 57, 58, 60
Archimedean screw conveyor..... 583
Area of discharge in gravity stamps..... 209
Argall four-cylinder drier 890
Argall, Philip 69, 97, 395, 1047
data on sampling..... 543
Argentite, specific gravity of..... 1188
Argon, atomic weight of..... 1188
Armitage 426
H. E. 476, 640
on material for bottom beds..... 574
Arrangement of holes in screens..... 168
machines in mills 1107
plates 742
trommels 394
Arrastra or Drag-Stone Mill 232, 237, 1039
bibliography for..... 280
used in California 231
Arsenic, atomic weight of..... 1188
specific gravity of..... 1188
Arsenolite, specific gravity of..... 1188
Arsenopyrite, specific gravity of..... 1188
Asbestos dressing..... 1079
mine mill 1117
Asphaltum, specific gravity of..... 1188
Assaying 1163
Assay office 1160
Assay of products of Paddock air jig..... 823
Atacamite, specific gravity of..... 1188
Atlantic Copper Mining Company, launder in..... 873
Mill 142, 1131, 1175, 1189
capacity of Evans classifier at..... 395
slime tables in 697
cost of crushing at..... 51
by steam stamp at.....134, 135
labor in 135
details of cylinders, water used, and capacity 126
screen for stamp 121
mortar housing lining for stamp..... 130
Mining Company 1161
Atmosphere 1188
Atomic weights, table of..... 1188
Attachment of screens 365
Atwood amalgamator 775
M. 229
Aurora Mill, pointed boxes in..... 477
Austin, W. L.....224, 251, 290, 291, 385, 475, 787, 1174
estimate by, of wear of shoes and dies in Harshaw mill 949
Australian Mills, arrangement of plates in..... 742
slope of plates in..... 745
Australia, riffles containing mercury in..... 730
Austrian graphite mill, continuous sieve in..... 727
Author's tests on jigging mixed sizes..... 620
suction 627
Automatic discharge, Captain Harris atmospheric. 583
double 583
in jigs, gate and dam 577
intermittent 594
pipe discharge 583
stay boxes for..... 594
feeders 633
Cornish feeders 633
Gates feeder 635
Hendy's Challenge 636
roller feeder 634
sliding block feeder..... 633
Tulloch feeder 636
Axinite, specific gravity of..... 1188
Azurite, specific gravity of..... 1188

B

Babbitt metal 751
Back plates, disadvantages of..... 178
Badoureau, A..... 477
Baffle board settling tank..... 459
Bailey, G. E..... 1183
Baker, G. W.....58, 110, 838, 839
Balliol Mill 1184
Ball, C. M.....292, 309, 833, 1175, 1176
Mills 260
bibliography for 293
Bruckner 260
Grison 260
Jenisch 261
Krupp 260
sizing test of 315
Ball mill test 1156
Ball-Norton separator, products of in mines..... 798
or Monarch magnetic separator..... 797
Ballou, E. L..... 1184
Ball's "Revolving knife buddle".....328, 334
rules for power 309
Ball stamp 114, 142, 143
details of cylinders, water used, and capacity 126
dies 122
rings 122
screens 121
shaft 126
staves in 123
valve action 127
efficiency of 133
frame of 118
mortar housing for..... 119
power for 131
safety devices in..... 127
steam cylinder in..... 122
table of details of mortar..... 120
foundations and mortar beds for..... 118
mortar housing linings for..... 120
sills and girders 118
Bally balanced cam 226, 228
Bank, depth of, in trommels..... 380
Banner mine, mortar block in..... 143
Barber, G. M..... 1182
Barbour, T. J..... 1182
Barite, angle of nip required to crush..... 94
Barite, specific gravity of..... 1189
Barium, atomic weight of..... 1188
Barnhardtite, specific gravity of..... 1189
Barnhart, G. A..... 284
Barrels, clean up 264
Bar riffles 721
in Mill 56..... 724
Bar screens 336
Barth, C.....112, 229
K 60, 142
Bartle pulverizer 233, 294
Bartlett 1004, 1119
driving mechanism 1153
F. L.....492, 1181, 1183
J. C 837
mill 1005
picking table 489
table 678
Bartsch breaker 61
fixed circular convex slime table used by..... 691
Barus, C.....477, 479, 1186
results of experiments on clay and tripolite particles 474
Basin washers for disintegrating clay..... 335
Batea 1152
belt 657
mechanical 683
Battery cloth, brass 171
iron 171
in gravity stamps, stay and overflow..... 214
Baugh's Mill 292
Baum coal jig 519, 581
advantages of 519
air pressure and gravity 537
disadvantages of 519
Bauschinger, J..... 316
Bauxite, specific gravity of..... 1189
Baxter breaker 56, 58, 60, 61
Bayliss, R. T.....194, 787
Bay State Mining Company..... 1023
Beach Glen mine, products of Wenstrom magnetic separators at..... 802
Bearings and collars..... 190
for shafts 72
Beaumont, W..... 69
Becker Foundry and Machine Company..... 30
G. F.....290, 291, 295, 789
Becket Foundry and Machine Company..... 76
Bed, bottom, definition of..... 495
of pulp on the belt in vanners..... 660
Bell discharges in jigs..... 582
Bellom, Maurice....32, 57, 60, 61, 296, 385, 432, 477, 492, 641, 728, 833, 837, 1176, 1185
on finest size jigged..... 606
on three mineral separation in jigs..... 590
Belt, batea 657
bed of pulp on, in vanners..... 660
Blasdel 647
canvas, used in Mill 41..... 650
conveyors, endless 861
rubber 859
corrugated 647
film tables 697
Brunton table 698
Castelnau table 698
Ferraris table 698
Uren table 698
Belt in Frue vanner..... 647
Belting 1093
Belt, Loring 647
rope and plate conveyors, for hand picking..... 489
travel of, in vanners 659
Woodbury 647
Belts and pulleys, table of..... 197
comparative results with plain and with corrugated 650
link 860
Benedict, W. de L.....333, 335, 1180
Benson Mines, N. Y., capacity of plant at..... 798
products of Ball-Norton separator at..... 798
Berdan's amalgamating pan..... 291
Berlin, Tests on strength of stone at..... 301
Bertha Zinc Company 1180
Works 1105
Berthierite, specific gravity of..... 1189
Bertrand Mill 110
Beryllium, atomic weight of..... 1188
Beryl, specific gravity of..... 1189
Bibliography for accessory apparatus..... 884
amalgamation 878
appendix 1197
classifiers 476
elevators and conveyors 884
feeders and distributors..... 884
film-sizing tables 727
gravity stamps 223
hand picking 492
kieves 737
launders 885
laws of classifying by free settling in water. 475
crushing 315
jigging 639
magnetic concentration, and roasting for magnetism 839
milling 1173
minor processes 839
percussion tables 727
pneumatic concentration 837
preliminary crushing 55
washing 334
pulverizers other than gravity stamps.... 289
riffles 727
rolls 109
sampling 884
sizing screens and principles of screen sizing.. 334
spring and pneumatic stamps..... 143
steam stamps 142
vanners 727
Bilharz circular plunger jig..... 518
circular sieve power jig..... 504
hydraulic classifier 475
improved Rittinger *spitzluite*..... 478
Bilharz, O. 54, 55, 109, 142, 223, 292, 293, 295-298, 332, 334, 384, 478, 492, 639, 641, 643, 727, 729, 833, 837, 1173-1175, 1182, 1185
advantages of Bilharz over Rittinger *spitzluite* 476
oblong, movable sieve power jig..... 502
O. *spitzluite* designed by..... 422
theory of free settling, etc..... 475
spitzluite 475, 477
tables 689

Billick, Joseph 492, 836, 1185
Bins and receiving floors.... 842
construction of 842
discharge chute in.... 842
intermediate 843
of stamps 122
Biotite, specific gravity of.... 1189
Birkinbine, J. 51, 57, 833, 1175
Birmingham Iron Foundry.... 76
wire gauge 248
Bismuth, atomic weight of.... 1188
Bismuthinite, specific gravity of.... 1189
Bismuth, specific gravity of.... 1189
Bituminous coal, specific gravity of.... 1189
Black Hills trap.... 772
Blake breaker 13, 55-61
author's test on samples crushed in.... 311
comparative wear of metals for jaw plates in 48
comparison with Dodge type.... 33
description of 13
details of sizes of.... 16
horse power required.... 17
instructions for mounting.... 18
lead and silver ore crushed in.... 274
made by Gates Iron Works, movements on. 34
material from, treated in dry crusher.... 274
operation and adjustment 16
table of movements, made by the Farrel Foundry and Machine Company.... 34
table of sizes of 17
Von Reytt's tests in.... 305
wear of 25
Challenge rock breaker....20, 59
E. W. 13
Marsden breaker....56, 58
multiple jaw breaker....28, 61
reverberatory furnace designed by.... 339
T. A. 20, 48, 57, 59, 60, 269, 295, 1175
W. P. .. 57, 143, 229, 478, 640, 643, 789, 833, 839, 1175
Blanding, L. 789
Blandy, J. F.....142, 143
Blanket, dry 825
tables 703
details of in mills.... 703
Blanton cams 193, 225, 228, 229
Blasdel belt 647
Blasting in the mine.... 9
effect of, in ore dressing.... 9
Bleiberg, Belgium, product of Rittinger tables at. 668
Blende, crushing by rolls.... 63
separating from quartz.... 720
separation of at Ammeberg.... 9
weight of 1190
Bleyberg, double discharges at.... 584
mill, sieve scale at.... 367
Blinding of screens 373
Block system, in hand picking.... 481
Blömeke, C. 293, 296, 360, 385, 477, 492, 641, 728, 834, 836, 837, 839, 1177
on capacity, etc., of jigs.... 597
labor for running jigs.... 604
length and number of strokes in jigs.. 594
Blue Bird Mill, sizing test in.... 222
"Blue ground," weight of.... 1191
Bobtail Mill, dimensions of mortars in.... 165
rate of crushing in.... 165
weight of stamps and mortars.... 164
Bogardus eccentric mill.... 233
bibliography for.... 292
James, eccentric mill.... 259
Böhme, Dr. 316
Bolton, R. 60
Bolts for holding down mortar in stamp mill, table of 150
Bolzenmuhle 236, 299
Bonanza Company 459
Mine, details of stamp mill practice.... 221
Booth breaker 60
combination breaker 60
Borchers, W. 837
Borgmann and Emde movable grizzly bars.... 386
revolving grizzly bars.... 386
Bornite, specific gravity of.... 1189
Bornstein 1188
Boron, atmoic weight of.... 1188
Bosses or stamp heads.... 185
sockets in 187
table of details of.... 186
Boss, M. P....239, 244, 426
Boss, M. P., dies made by.... 245
muller and shoes made by.... 246
shoe and die channels in amalgamating pan of 247
pans 241, 321
details of pan, pan bottom, and central cone 243
shafts used for.... 248
steam jackets in.... 244
system 290, 321
of working amalgamating pans.... 248
tubular classifier 473
Boston and Montana Consolidated Copper and Silver Mining Company.... 974
Bottom bed in jigs, definition of.... 595
material of.... 574
size of grains of.... 575
thickness of 575
Bournonite, specific gravity of.... 1189
Bower's rolls 111
Bowie, A. J., Jr...57, 164, 165, 224, 324, 385, 787, 1006, 1173, 1174, 1197
hydraulic mining 721
on grade of a sluice.... 723
timber riffle blocks.... 721
Box classifiers, surface current.... 433
whole current 443
Boxes or bearings for shafts.... 72
Box traps 773
Bradford jigs 334
eccentric jig 800
washer 336
Brass battery cloth, Tyler double crimped.... 171
cloth screens 174
Braun's jig, double discharges in.... 584
liquid 1184
Breakers, advantages of large over small.... 49
Blake 13
Challenge 20
compared with Dodge.... 32
multiple jaw 28
Brennan and Young.... 31
Buchanan rock 33
Comet 41
table of details of.... 41
Dodge 33
duplex 31
essentials of 49
Forster 35
Fulton Iron Works.... 32
Gates 36
action of 36
Iron Works 38
table of details of.... 38
general consideration about.... 47
Giant Rock 33
Hercules Rock, Hendy Machine Works.... 32
jaw 13,
jaw, general remarks on.... 32
Krom, movement on in Mill 22.... 34
large *versus* small.... 49
lever pattern of Blake.... 31
Lowry National 45
McCully gyrating 44
table of sizes of.... 44
Minnesota Iron Mine.... 33
Monarch (Blake type) 30
of Blake type 30
Brennan and Young.... 31
Buchanan Rock 33
Colorado Iron Works.... 30
details of, from the mills.... 32
duplex breaker 31
Friedrich Krupp Grüsonwerk.... 33
Fulton Iron Works.... 32
Gates Iron Works.... 38
Giant Rock 32
Hercules Rock Breaker, Hendy Machine Works 32
Krom's Sectional Breakers.... 31
lever pattern 31
Minnesota Iron Mine.... 33
Monarch Breaker 30
Risdon Iron Works.... 32
sectional cushioned crusher.... 30
Union Iron Works breaker.... 31
Walburn and Swensen.... 32
quality of crushing by.... 49
Risdon Iron Works.... 32
rock 32

Breakers, Rutter 45
Schranz 21
sectional, Krom's 21
section of Krom's Standard 21
sizes of Monarch 21
spindle or gyrating 36
table of comparative tests of 45
details of 46
Sturtevant Roll Jaw 32
Union Iron Works 31
use of water in 49
wear of Dodge 31
Western Wheeled Scraper Company 25
Breaking by hammers, hand sledges 10
with or without hand picking 9
crushing, comminuting 8
general considerations about 47
Breccia, andesitic, crushed at Florence, Colorado. 103
Breckenridge, Colorado, ore crushed in Griffin mill 294
Breinigerberg Mill at Stolberg, four-sieve jig used in 532
capacity, etc., of jigs in 597
Brennan and Young 21, 1055
Brennan breaker 59
Brewer, W. A 385
W. H 1183
W. M 1180
Briart bar screen 346, 384, 385
movable grizzly bars 386
Bridgman, H. L 384
Brinje's breaker 58
Brink and Hübner disintegrator 236, 284
bibliography for 296
capacity of at Mannheim 286
Britannia United Mill, method of neutralizing acid water in 173
temperature of battery water in 768
Brittleness, effect of in dressing ores 3
under crushing force 391
Brodie Breaker 60
Broken Hill Mill 1104
Broken Hill, New South Wales, Collom jig used at 515
Hancock vanning jig used at 504
Broken ore, weight of 1190
Bromine, atomic weight of 1188
Bromly, A. H 1181
Bromyrite, specific gravity of 1189
Brookfield Mining Company 1166
Brookite, specific gravity of 1189
Brooklyn Chrome Steel Works 183
Brough, B. H 834, 1179, 1185
Brown and Sharpe 172, 1194, 1195
Brown coal, specific gravity of 1189
Browne hydrometric conical sizer 409
dimensions of 409
sizing of products of 410
Brownell flange 647
Browning, F. D 230, 789
Brown, R. G 227, 788
Brown's breaker 58, 59
spindle breaker 56
Brucite, specific gravity of 1189
Brückner ball mill 233, 260, 293
Brunswick mill, wear of iron in pans in 249
Brunton, D. W 74, 384
designs for rock houses 485
experiments with cone hydraulic classifier 475
rules for sampling 850
sampler 847
table 698
Bryan Mill, bibliography for 295
compared with Huntington mill 272
stamps 272
sizing test of tailings 273
used in California 231
Bryan Roller Quartz Mill 235, 271
dimensions of 272
Buchal, L 239, 478
Buchanan breaker 61
table of movements of old 23
C. G 1178
granulator 59
magnetic separator 803
rock breaker 23
universal breaker 59
Buckbee, Arthur 1040
Bucket conveyor 860
elevators 862
Bucket elevators, capacity 864
sample 865
Buckets, elevator, materials for 864
Buddle jig 518
Buddles 704
rectangular 706
round concave 706
convex 704
tye 707
Buffalo Hump Mining Company 954
Buhrstone Mill 262, 297
bibliography for 291
Building tables 704
Bullion Beck and Champion Mining Company 926
Bullion, fineness of 785
in amalgam after squeezing 783
Bumping and jerking tables 667
tables, action of 644
end-bump tables 680
Hendy concentrator 683
Salsburg table 682
table of details of 683
Bunker Hill and Sullivan Mill 1183
Mining and Concentrating Company 937
Burdon, J. A 723
Burlingame, E. E., data on sampling 848
figures on sampling 852
Burthé, P. L 224, 291, 1176
Butte and Boston Mill 281
Mining Company 976
cost of die, etc., at 121
ore 110
sizing test on, crushed by steam stamps .. 135
Reduction Works 987
side-jerk tables at 674
test on ore at 674
Butters, Charles 1184
data on sampling 849
figures on sampling 853
Butter's patent grinding and amalgamating pan, 233, 293
Büttgenbach 1151
hydraulic classifiers 476
P 1181
Büttgenbach's classifier 479
pointed boxes 478
separator 447

C

Cabarceno, Spain, wash trommel used at 230
Cadmium, atomic weight of 1188
specific gravity of 1189
Caesium, atomic weight of 1188
Calamine, specific gravity of 1189
Calcining for friability, at Allevard, France 9
Altenberg, Saxony 9
Ammeberg, Sweden 9
in North Carolina 9
with or without quenching by water 9
Calcite, angle of nip required to crush 94
specific gravity of 1189
Calcium, atomic weight of 1188
Caldecott, W. A 1178
Caledonia Mill 183
bullion in squeezed amalgam in 783
details of screen in 170
dies used in 180
dimensions of mortars in 165
fineness of bullion in 785
loss by melting in 784
mouth of mortar in 167
rate of crushing in 165
running cost in 54
screen frames in 177
weight of stamps and mortars 164
Caledonia mortar 228
California gravity stamps 128
efficiency of, compared with steam 124
California Mill, number and height of drops in .. 214
silver mill 1174
stamp mill 144
stamps 230
system 224, 227
of stamp milling 1080
Callon, J. .55, 109, 223, 315, 384, 492, 639, 727, 827, 1178
theory of free settling, etc 475
Calumet and Hecla Mill 143, 1184
Huntington mill in 231
mortar housing lining for stamp 120

Calumet and Hecla Mining Company.....141, 990
classifier 391
Mill, sizing tests in..... 259
Cam and gravity in Stutz jigs..... 537
spring in jigs..... 537
Cammett table 676
Camroux breaker 58, 61
Cams 191
Blanton 193
design of 196
friction and lubrication of..... 194
Cam shaft, ... 190
and bearings, table of..... 191
Cams, lateral thrust of..... 195
right and left hand 195
self-tightening 193
table of details of..... 192
inscribing circles and clearance..... 196
Cam sticks 199
template 193
Canada Corundum Company 1078, 1183
Mill 1117
Cannon ball mills 231
Canvas belts 1094
belt used in Mill 41..... 650
shield for screens 177
tables 700, 1155, 1165
details of in mills 703
Capacity, hydraulic water and power for jigs in mills, table 596, 597
of blende jigs of Southwest Missouri..... 602
conical slime table 697
Huntington mills 280, 281
jaw and spindle breakers..... 52
jigs 599
rolls 100
settling tank 15 feet square..... 455
steam stamps.....126, 130
on ore of Mill 48, table of..... 130
trommels 359
vanners 662
Cap, in amalgamating pans..... 247
Captain Harris atmospheric discharge..... 582
John Richards discharge 580
Carat, value of a..... 1061
Carbon, atomic weight of..... 1188
Carcanagues 728, 1176
Care and purification of mercury..... 735
of mills 1114
Carey Mill 291
portable pulverizing mill 232
Carkeek, James, hydraulic classifier 416, 476, 477
John, slope of launders used by..... 875
slope for launders..... 874
Carlisle gold stamp mill..... 1180
Carnall wash trommel 324
Carn Dochan mines, North Wales, Clarkson-Stanfield centrifugal separator at..... 820
Carpet or blanket surfaces for plates..... 750
tables 703
details of in mills..... 703
Carr disintegrator 236, 284
bibliography for..... 298
table of details of..... 285
Carrick, J. T..... 1178
Carr, M..... 298
Carter, F. L..... 789
Cassiterite, specific gravity of..... 1189
Castelnau table 698
Cast iron, specific gravity of..... 1189
Catherine (Australia) Mill, wear of shoes and dies in 183
Casin, F 838
F. M. F.....476, 640, 641
Celestite, specific gravity of..... 1189
Cement Gravel Drift Mining Company, sizing test in Mill of..... 211
treated in Dodge improved pulverizer..... 262
Center discharges in jigs..... 582
Centimeter 1187
Central cone of amalgamating pans..... 241
Lead Company 917
Centrifugal force 890
effect of in trommels..... 373
of Huntington Mill..... 278
separation by..... 827
machine separating coal 820
pumps for sand and water 868
used for elevating mill pulp..... 870
separators, "Alpha" De Laval cream separator 827
Centrifugal separators, Clarkson-Stanfield.....820, 828
Pape-Henneberg 823
Peck 823
Cerargyrite, specific gravity of..... 1189
Cerium, atomic weight of..... 1188
Cerussite, specific gravity of..... 1189
Chabazite, specific gravity of..... 1189
Chalcocite, specific gravity of..... 1189
Chalcopyrite, crushing by rolls..... 62
separation from quartz 720
sizing test on..... 99
specific gravity of..... 1189
Challenge feed clutch 657
Rock Breaker 30
Chalmers, estimate of cost of hand picking on the Rand 467
Chalmers, J. A..... 1172
Chalon, P. F.....227, 516
Champion breaker 58
Chance, H. M.....112, 1179
Change of magnetism by heat 4
porosity by heat 4
Channels, shoe and die in amalgamating pans.. 246
Charleston Mill.....294, 1174
Charleston, A. G..56, 60, 111, 229, 290, 296—298, 476, 492, 789, 1124, 1127, 1173, 1179, 1182, 1184, 1185
hydraulic classifier..... 478
ore concentrator 427
Chase 1135
H. S.....833, 1176
Chatard, T. M.....1148, 1149, 1176
Chateaugay Ore and Iron Company.....59, 1175
products of Wenstrom separator at mine... 962
Tailings Mine, products of Ball-Norton separator in..... 796
"Chats," definition of..... 960
Chaumeis 1173
Cheese-scoop sampler 944
Chemicals, cost of, in pan amalgamation..... 250
Chicago and Aurora Smelting and Refining Company 95
Iron Works..... 76
Chili Mill 260
Chism, R. E..... 290
Chlorinating gold ores..... 1167
Chlorine, atomic weight of..... 1188
Choctaw Coal and Railway Company..... 1180
"Choke" crushing 48, 96
Chondrodite, specific gravity of..... 1189
Chrome Steel Works.....98, 194
Chromite 1073
mill, in Newfoundland 475
Newfoundland, sizing tests on..... 99
specific gravity of..... 1189
Chromium, atomic weight of..... 1188
specific gravity of..... 1189
Chrysoberyl, specific gravity of..... 1189
Chrysocolla, specific gravity of..... 1189
Chrysolite, specific gravity of..... 1189
Chuck block 177
Chuquicamata, disintegrating ore at..... 280
Church, J. A.....290, 291, 788, 837, 1176, 1180
Cinnabar, specific gravity of..... 1189
Circular jigs..... 582
slime tables, operation of..... 698
City and Suburban Mine, details of stamp mill practice 221
Clarifying reservoirs 469
Clark, A. J.....788, 789
D. K.....835, 1173
E., Jr.....57, 224, 285, 476, 492, 640, 788, 833, 1174
Ellis, Jr., on power in jigs at Przibram.... 608
results of roasting ore..... 815
on length and number of strokes in jigs..... 894
Clarkson-Stanfield centrifugal separators, 820, 823, 830, 831
Clarkson, Thomas 834
Clark table 698
Classification by free settling 474
of magnetic separators..... 706
pulverizers 231
rolls 98
Classifier, Altenberg 434
at Engis 327
Calumet 391
Ferraris hydraulic 440
Gates' hydraulic 438
James Carkeek 476
Meinecke 439
Richards-Coggin or Calumet..... 388

Classifier, Tamarack hydraulic, details of in mills. 397
testing a 1170
the Anaconda 396
hydraulic, details of in mills..... 396
Dalton hydraulic 398
Evans 398
Richards' shallow pocket hydraulic 401
tubular 428
Tamarack 397
Yeatman 399
Classifiers 387, 1144
bibliography for..... 475
box, surface current 433
whole current 443
deep double trough..... 416
pocket hydraulic 400
definition and classification..... 387
hopper-shaped, shallow pocket hydraulic.... 400
hydraulic 387
double cone 426
Fraser and Chalmers 416
G. G. Gates 413
principles of action of..... 387
sizes of feed to..... 389
sorting column in..... 397
spigots in 393
trough or shallow pocket 389
Lake Superior Hog Trough..... 390
products of in Mill 45..... 391
products of in Mill 46..... 391
quality of work of..... 461
tubular hydraulic 421
Classifying by free settling in water, bibliography for laws of..... 475
Claudet, A. C..... 1182
Clausthal 1089
finest size jigged at..... 606
hand picking at..... 492
method of feeding jigs at..... 549
Mill 1086, 1102, 1116
sieve scale at..... 367
ore dressing mill at 965
plunger rods of jigs at..... 531
pointed boxes used at.....476, 477
removal of slimes by classifiers..... 373
sizes of ore hand picked at..... 487
slope of jig sieves at..... 548
spigot of jig used at..... 538
tail discharge on jigs at..... 582
unwatering sieves used at..... 586
Clay and kaolin washing 1075
capacity of Stedman disintegrator for..... 286
Clayton, J. E., on amount of drop on plates..... 743
Clay, weight of 1190
Cleaning amalgam 780
or removal of amalgam from plates..... 757
plane, definition of..... 646
up mercury traps 774
Clean-up barrels 264, 294, 1156
details of, in mills 202
in gravity stamps 201
in steam stamps 134
pans 250
bibliography for 291
table of details of in mills..... 252
Clearance of the plunger, and its attachment to the connecting rods 529
Clemens Jones 1135
Clerc, G.....225, 641, 1177
Clinochlore, specific gravity of..... 1189
Clinometers 1159
Clinton fossil hematite ores, results of tests on Wetherill magnetic separators..... 809
Cloth screens 170
compared with punched plate..... 171
details of from the mills..... 170
Clutches 198
Coal, capacity for, of Stedman disintegrator..... 286
Coarse concentrates, definition of..... 494
removal of in jigs 576
Coarsest size jigged..... 606
Cobalt, atomic weight of..... 1188
Cobaltite, specific gravity of 1189
Cobalt, specific gravity of..... 1189
Cobbing 480
Cobbing hammers 11, 55, 56
house 492
Cochiti Mill 1092
Cocoa matting 703
used with expanded metal riffles..... 722
Codman breaker 58, 61
Coffee mill 255
Coggin 126, 129, 131, 133, 134
F. G.....142, 230, 723
on capacity of slime tables..... 697
Cohn's ball mill 293
Colgnet, M. F.....225, 733
Cole's breaker 59, 61
Collars and bearings 190
Collectors, used on amalgamated plates..... 743
Collins, A. L..... 739
H. F..... 884
Collom jig 345, 510
advantages of 514
compared with Hars..... 515
construction of 524, 535
hydraulic water in..... 537
life of 604
modifications of 515
sizes of sieves and plungers in mills..... 539
slope of sieves in..... 548
tailboards in 551
Collom sampler 847
Colombian Mines, Colombia, plates in..... 749
Colorado concentrator 104
gravity stamps, efficiency of, compared with steam 134
Iron Works 31, 71, 74, 76, 84, 87, 97
breaker 28
method of driving vanner belt..... 652
single cone classifier of..... 477
mill, number and height of drop..... 214
Smelting and Mining Company.....281, 978
system of stamp milling 224, 227, 1030
Color and luster, use of, in dressing ores..... 3
Columbia Mill, Colorado, Browne sizer in..... 410
Columbian pulsating screen 342
Columbite, specific gravity of..... 1189
Columbium, atomic weight of..... 1188
Combination of principles of separation..... 891
process of amalgamation 248
Comet breaker .....41, 57—60
adjustment for wear..... 42
amount of throw 42
table of details of..... 41
dimensions of 44
Commans figures on slope of jig sieves..... 548
on capacity, etc., of jigs..... 597
on length and number of strokes in jigs..... 594
R. E.....60, 385, 478, 492, 643, 729, 835, 838, 1183
Comminuting 3
Commonwealth Mining and Milling Company.... 261
Compania de Huanchaca de Bolivia..... 160
Comparative tests of spindle and jaw breakers. 52
breakers, table of..... 45
wear of metals for jaw plates of Blake breakers 48
Comparison of cloth and punched plate screens... 171
convex and concave slime tables..... 692
Gates and McCully breakers..... 45
jaw and spindle breakers..... 51
plain copper and silver plated plates..... 743
rolls and stamps 314
round holes with slotted holes in screens.... 169
side-bump and end-bump tables..... 682
side-shake and end-shake vanners..... 655
the Blake and Dodge type of breakers..... 38
trommels and riddles..... 365
vanners with convex slime tables..... 691
various machines for crushing 312
Wilfley and Rittinger tables..... 679
Compound edge stone mill.....295, 296
Compressive strength of stone..... 300
Computation of work for crushing..... 312
Computing results 1161
Comstock lode 291
mills 230
wear of iron in pans in..... 249
Concave slime tables..... 692
comparison with convex..... 692
Concaves on spindle breakers..... 47
Concentrates bins 843
coarse, definition of..... 494
disposal of..... 586
storing and shipping 1112
Concentrating plane, definition of..... 646
slope of in vanners..... 659
Concentration 818
advantages of..... 1
cost of 3

Concentration, limit of 1118
magnetic 790
mill 1117
pneumatic 815
Works at Monteponi, Sardinia 1066
Concentrator, Charleton Ore 427
Ellis 657
Embrey 653
Gilpin County 630
Golden Gate 681
Hendy 683
Hooper, pneumatic 820
Johnston 652
Norbom 652
pneumatic belt 818
Concentrators, air, using a continuous blast of air 816
force other than air blast 818
depth of bed in 644
for fine sands and slimes 644
belt film-tables 697
bumping tables 667
film-sizing tables 685
intermittent surface tables 700
kieves 726
riffles 720
Concentrator, Triumph 652
Tulloch 652
Concentric grinders 312
trommels 262
Cone classifier 476
Mill 255
bibliography for 292
Cones, pyramids and prisms 361
Conkling dry magnetic separator 809
jig 503
wet magnetic separator 810
Connecting rods, for plunger in jig 530
Consolidated Stanley Mining Company's mill, jig middling treated by 677
Virginia mill, cross sills in 153
mud sills in 153
Construction of jigs 524
mill buildings 1088
Construction of rolls 63
slime tables 684
Continuous kieve 727
movable sieve power jigs 499
or Boss system of working amalgamating pans 248
surface tables 686
fixed circular convex slime tables 689
revolving circular concave slime tables 692
Convex slime tables 686
comparison with concave 692
vanners 691
Conveyors 859
bibliography for 884
bucket 860
Edison distributing 861
endless belt 861
pan or plate 860
rubber belt 859
scraping 860
screw 861
Cook, R. A. 833, 1175
Cooley, G. T. 643, 1180
jig 522
number of sieves in 590
shafts used in 532
width of sieves in 591
Cooper, James R. on Halse's tests 749
Copake Iron Works 330
Copper, action of gravity stamps on 314
atomic weight of 1188
breaking in Mine 44 54
clean-up of, in stamp mills 134
comparison of breaking by hand and by machine 13
crushed by Calumet and Hecla Company 141
in Mill 44 259
in tailings of Mill 48 130
Lake Superior mills 114, 475
method of separating from rock 12
of Lake Superior, adaptability of steam stamps for crushing 314
ores, leaching 1167
percentage of in tailings of Mill 46 131
picked in Mills 44, 46, 47, 48 489
46 and 47 482
Copper plates, absorption of amalgam by 765
coated with amalgam 747
quicksilver 747
method of amalgamating 752
annealing 747
electroplating 754
quality of 747
silver plated, coated with mercury 747
plate screens 174
removal of 251
results of tubular classifier tests on 612
rock, cost of crushing at Atlantic Mill 51
crushing by rolls 62
stamped at Phoenix mine 140
silver ores treated by Collom jigs in Mill 42 515
size of grizzly used for 340
specific gravity of 3, 1189
stains on plates 750
stamps suited for 134
treated at Moonta mines (Australia) 505
by Collom jigs 515
in Mills 44, 46, 47, 48 486
Cordier, E. 299
Cornacchino Mine 1074
Corning, F. G. 729
tables 669
Cornish feeders 356
"frames" 704
jigs in Mill 12 506
rolls 109, 112
tin concentration works, roasting for porosity at 829
mills 1119
ore, crushed by Husband stamps 141
works 704
vanning shovel 1152
Cornwall, cost of crushing by rolls 104
kieves used in 727
range of sizes jigged in mill at 609
runs in, on tin ore 478
Corrugated belts 647
comparative results with plain and 650
rolls 106, 111
table of 107
Corundum and emery dressing 1078
pans used for washing 333
separation of, in North Carolina 9
specific gravity of 1189
washing pan for 335
Cost of concentration 2
crushing 49
at plant of Minnesota Iron Company 57
by gravity stamps 205
Huntington mill 281
jaw breaker, table of 50
rolls 104
spindle breakers, table of 50
stamps, for interest, taxes, insurance and depreciation 205
labor 206
mercury consumed 206
power 205
water used 206
wearing parts 206
steam stamps 134
direct smelting 1
erecting mills 1126
hand picking 427, 492
galena 483
jaw and spindle breakers 52
jigs 604
jig screens 547
milling 1126
mining 1126
pan amalgamation 250
repairs in vanners 683
on rolls for other than wearing parts 104
running spindle and jaw breakers 54
screening 300
screens 173
per ton of ore crushed 174
shells, table of 69
trommel screens 352, 361
Covers for amalgamating pans 244
mortars 187
Cowenhoven Tunnel Company, rock house of 485
Coxe, Eckley B. 110, 335, 689
gyrating screen 345, 385
Coxe's automatic slate picker for coal 482
Coxheath ore, sizing test on 52

Cradle or rocker 722
Crank arm jig, construction of..... 525
mechanism 535
Crawford mill 234
bibliography for..... 295
Cremer, Richard 298, 385, 643, 838
Crickboom wash trommel 330, 334
Cripple Creek, rock house at..... 485
Crocker's stamps..... 229
Crocoite, specific gravity of..... 1189
Crookes, William 1185
Cross mill, Colorado, arrangement of plates in. 742
figures on amount and value of amalgam in 763
gold and silver in amalgam in..... 762
hydraulic classifier in..... 774
mercury wells in..... 769
Cross sills in gravity stamps..... 153
Croton iron mines, New York.....298, 1175, 1180
ore, concentrates of..... 798
products of Ball-Norton separator in..... 803
Crown Point mines..... 1174
New York 901
Reef mine, stamp mill practice in..... 221
Crusher, Magic 299
Crushers 1137
Crusher, sectional cushioned..... 20
Sturtevant 22
Crushing 8
bibliography for laws of..... 315
by breakers, quality of..... 47
gravity stamps cost of..... 205
jaw breakers, table of cost of..... 50
rolls, cost of..... 104
quality of 98
spindle breakers, table of cost of..... 50
steam stamps, cost of..... 134
choke 98
cost of..... 49
cylinders 65
extent of, desired..... 303
final 63
free 98
graded 103
laws of 300
machines, kinds of 8
sizing tests of..... 315
methods of 8
ribbons 101
rolls 62
single stage 103
work required for..... 304
Cryolite, specific gravity of..... 1189
Cubic centimeter 1187
of water 1183
decimeter 1187
foot 1187
of water 1187
inch 1187
of water 1187
meter 1187
of water 1187
yard 1187
Cummer drier 880
Cumming's ore granulating mill.....232, 255, 292
Cunnack's pulverizer.....233, 293
Cuprite, specific gravity of..... 1189
Curtis, A. H.....59, 111, 142, 227, 291, 293-299, 316, 1182
Cutten, W. H.....1179, 1184
Cutter, George A., tests on stone..... 302
H. C..... 1179
Cuyahoga stamps 114
details of cylinders, water used and capacity.. 126
dies 123
rings 122
screens 121
shaft 128
staves in 123
valve action 127
efficiency of 133
mortar housing for 119
table of foundations and mortars beds..... 118
Cyanide plant, the Windsor in the West Rand.... 478
Cyaniding gold ores 1167
Cyanite, specific gravity of..... 1189
Cyclone pulverizer 236, 288, 297
bibliography for 298
table of details of 289
Cyclops mill 234
bibliography for 294
Cylinder, Aising 266
steam 122
Cylinders, crushing 65
Cylindrical trommel 348
wash trommel 335

D

Daggett 1167
E 1175
Dahlonega mortars 153
Daily amalgam, gold and silver in..... 762
Dalton hydraulic classifier 293
Dam, Belgium, side-bump tables at..... 668
Dana, E. S.....2, 3, 1173, 1188
Dana's table of hardness..... 2
Daniels, C. H..... 1149
Dannemora mines, Sweden, Wenstrom magnetic separators at 800
Darlington, John 60, 111, 285
Data from the mills concerning settling tanks... 458
of rolls, table of..... 64
Datolite, specific gravity of..... 1189
Davey Paxman and Company 282
Davies 87
D. C 56, 143, 223, 476, 639, 1173
E. H...56, 109, 223, 293, 294, 296, 334, 384, 476, 639, 727, 787, 832, 837, 1173
on coarsest size jigged..... 606
finest size jigged 606
material of bottom bed 574
Davis rolls 111
M. C..... 139
Dead Sea water, weight of..... 1188
Deadwood Terra mill, bullion in squeezed amalgam in 782
De Beers Consolidated Mines 1060, 1061
Diamond Dressing Works, adhesion at..... 821
DeCourteney, H. W..... 225
Decrepitation 890
heating for 829
use of, in dressing ores..... 5
Deep double trough classifiers..... 416
pocket hydraulic classifiers..... 409
Deetken, G. F.....229, 729, 789, 1181
Definition of free settling and hindered settling.. 464
hindered settling 484
De Gournay 837
DeKalb, Courtenay 659, 1184
De La Mar Mill..... 1134
Delesse, on strength of magnetic substances..... 796
Delivik-Gröndal separator 804
Demaret, L.....61, 143, 230, 292, 294, 297, 316, 1185
Density of pulp on slime table..... 696
Denton, F. W..... 57
Depth of bed in concentrators..... 644
Derrick, W. H..... 1182
Derry, W..... 143
Description of Blake breaker 13
Designation of the sizes of holes in stamp screens 172
Designing of electromagnets 790
Design of cams 196
machines 1096
Desloge, J. M.....57, 1175
Mill 1175, 1185
disposal of concentrates in..... 887
De Soto mine ore, products from Krom jig on.... 824
Details of Blake type of breakers from the mills. 22
bosses, table of 186
cams, table of 192
clean up 302
dies 180
Dodge breaker, table of..... 30
methods for dressing and cleaning plates.... 757
rings from mills, table of..... 122
screens for stamps, table of..... 121
stamp shaft, table of..... 128
stems, table of 187
staves from mills, table of..... 123
valve action 127
Dewey, C. E..... 57
Diagram of sizing tests of products of Tustin mills and stamps 900
Diameter of rolls 88
shafts in jigs 532
slime tables 690
Diamond fields of South Africa, washing pans used in 823
Diamondiferous earth, washing pan for..... 823

Diamonds, obtained by adhesion by De Beers Diamond Dressing Works..... 821
Diamond, specific gravity of..... 1189
Diamonds, weathering, at Kimberley 330
Diamond washing 1060
pans 335
Diaspore, specific gravity of..... 1189
Diepenlinchen mill, capacity, etc., of jigs at.... 597
Prussia, capacity of bumping tables at..... 670
four mineral separation at..... 590
Die rings and roller shells, in Huntington mills. 280
staves and shoes for stamps..... 120
Dies 179
for amalgamating pans 245
life of 184
table of details of 122, 180
Diescher coal jig 520
connecting rods for plunger on..... 530
Difficulties of screening..... 372
Dimensions of mortars, table of..... 165
tappets 189
Dingey mill 233, 292
bibliography for 293
Dipper or bucket sample 345
Direct smelting, cost of..... 1
"Dirt," definition of..... 900
Disadvantages of gravity stamps as compared with rolls and grinders..... 223
Discharge for water, area of in gravity stamps.. 209
in gravity stamp, height of..... 212
steam stamps..... 129
Discharges into the hutch, in jigs..... 586
with unwatering sieves 586
Disc motion of jigs..... 536
Discussion of sorting tube results 467
Disintegrating followed by screening..... 830
settling or elutriation 830
Disintegrator, Brink and Hübner 284
Carr 284
Stedman 284
Vapart's 289
bibliography for..... 299
Disposal of concentrates..... 586
tailings 1113
Distances between rolls for various angles, in author's tests 311
Distl-Susky screw grate 386
Distributing tanks 449
Distribution of amalgam 764
Distributors 857
and collectors, used with plates..... 743
bibliography for..... 884
machine 857
mill 857
Dives, Robert 493
Dodd table 675
water wheel 1089
W. G..... 248
Dodge breaker .....28, 56—60
comparison with Blake type..... 33
improvement on in Mill 26..... 35
movements on, made by Gates Iron Works.. 34
perspective of 29
section of 30
table of details 30
movements on, made by the Parke and Lacy Company 34
sizes of 30
wear of..... 31
Dodge improved pulverizer 233, 242
M. B..... 23
Mill, bibliography for..... 294
pulverizers 231
sizing box.....416, 478
Dolcoath Mill 1063
Dolomite, specific gravity of..... 1189
weight of 1190
with disseminated galena crushed in Mill 25... 47
galena, crushed in Mill 25..... 98
Domeykite, specific gravity of..... 1189
Donahue, P. J..... 247
Donald, J. T..... 298
Dörnberg and Aurora Works, sieve scale at..... 367
sizes of ore hand picked at..... 487
Mill, pointed boxes in..... 477
Dorr hydraulic classifier 475, 477
Double cone hydraulic classifiers..... 425
tubular classifiers 478
crimped steel cloth (Tyler)..... 171
discharge, disadvantages of..... 209
Double discharge, on jigs..... 588
iron sieve frame 540
issue 167
trough classifiers..... 416
Douglas, James.....57, 134, 142, 234, 640, 1175
Dragon breaker 58
Drag stone mill 297
Drake, F. M.....181, 227, 736, 1181
W. F..... 730
effect of temperature on amalgamation.. 767
on cohesive power of mercury..... 767
Dredging, gold..... 1067
Dressing of plates 754
Driers 879, 880
Drifting plug, for cams..... 193
Driver, in amalgamating pans..... 247
Driving mechanism of rolls..... 75
for cam shafts 197
gearing 198
the clutches 198
pulley 197
tightener 196
for trommels 354
table of 76
Drop between sieves in jigs..... 540
hammers 12
table of details of in mills..... 13
height of, in gravity stamps..... 214
limits of speed and height of, due to mortar. 215
due to power..... 215
maintaining height of in gravity stamps..... 200
Drops, number of, in gravity stamps..... 214
of Tremain stamp, number of..... 133
Dry blanket 826
crusher, Langley's improved 274
magnetic separator, Conkling..... 809
panning 826
screening *versus* wet..... 1130
silver mill 1039
Dubuat 885
figures on transportation of sand by water current 878
Dudley, A. P., steel spring invented by..... 617
W. L..... 787
Dufferin Mill 1060
Duffield, P. W.....787, 1151, 1172, 1181, 1183
Dummler, K..... 1173
Dunham's spring stamp 141, 143
Dunnellon Phosphate Company 880
Duplex breaker 21
Dupont, O..... 1185
Dust fans and chambers..... 823
prevention 1080
Duty or capacity of trommels..... 359
Dyckhoff breaker 57

E

Eagle Foundry Company 76
West Virginia, capacity of Stedman machine at 265
Eames, W. H..... 220
Earnschleugh No. 2 dredge..... 703
Earth, weight of 1190
Eccentric grinders 263
in jigs 531
jig, the Bradford..... 499
Mill, James Bogardus 265
Eckart rolls 111
Eddy Electric Manufacturing Company..... 1062
Edge runners 236, 265
bibliography for..... 265
stone mills 269
Bryan roller quartz 271
compound 294
Langley's improved dry crusher..... 274
Edison distributing conveyor..... 861
drying kiln 831
dusting chambers 834
magnetic concentrating plant 1055
separator 813
for fine materials 820
method of preventing blinding of screens.. 823
on life of belts..... 824
opinion on shape of hole in screens..... 369
rolls 110, 133
screens 362
sprocket wheel on pan conveyors..... 859
T. A.....57, 105, 107, 210, 241, 823, 1054, 1062
Edman, J. A..... 880
Edwards, J. H..... 294

Edwards, Joseph and Company, centrifugal pump from catalogue of..... 869
Effect of acid water on screens..... 173
centrifugal force in trommels..... 372
length and slope of trommel on capacity..... 378
slope of trommel on capacity 377
speed on capacity of a trommel 379
strength and specific gravity of rocks on power used 373
temperature on amalgamation 766
Effect on capacity of trommels, of varying the diameter 379
Efficiency of steam stamps, table of..... 133
and gravity stamps compared..... 134
Egleston, T....56-58, 109, 110, 142, 153, 164, 223-225, 289-291, 293-296, 492, 639, 787, 1039, 1173, 1174
estimate by, of wear of iron in pans..... 249
Ehmke's ball mill 393
Eich, L..... 251
Eissler, M..56, 109, 153, 166, 188, 223, 290, 293, 294, 297, 476, 639, 787, 837, 1039, 1173
El Callao mill 1127
Electricity as power in mills..... 1091
Electromagnets, designing of..... 790
Electroplating copper plates..... 754
Electrum, specific gravity of..... 1189
Elevators 862
bibliography for 884
bucket 862
platform 864
Ellenbecker spring stamp 141
table 681
Elliptical gear, in jigs 536
Ellis concentrator 657
Elmore oil concentration mill.....1070, 1072, 1117
process 831
tests on, at Glasdir mine, Wales..... 832
El Silencio mill, gold and silver in daily and hard amalgams 763
Elutriation 889
Embrey concentrator 653
vanner, testing 1171
Emery dressing 1078
Emmons, S. F.....290, 291, 295, 789, 1175
Empire Mill 1020, 1184
Zinc Company 907
Ems 1102
mill at 1037
sieve scale at 367
three mineral separation at..... 590
Emargite, specific gravity of..... 1189
End-bump tables 667, 680
comparison with side-bump..... 682
Ellenbecker table 681
Gilpin County concentrator..... 680
Golden Gate concentrator 681
Imlay 681
Endless belt conveyors..... 861
End-shake vanners 653, 1153, 1165
comparison with side-shake..... 655
Embrey concentrator..... 653
Triumph concentrator 652
vibration in 658
Woodbury 655
Engelmann, H..... 640
Engis, classifier used at..... 817
hydraulic classifier 475, 477
E. P. Allis Company, 72, 76, 111, 178, 181, 187, 189, 194, 197, 228, 242—245
batea made by 683
dies made by..... 245
edge runner made by..... 270
muller and shoes made by..... 246
power for 5-foot pans estimated by..... 249
shoe and die channels in amalgamating pans of 247
weights of spider and driving cone made by 247
E. P. Allis rolls 83
Epidote, specific gravity of..... 1189
Erbium, atomic weight of..... 1188
Ernst, C. von..... 836
Erythrite, specific gravity of..... 1189
Esehka, A..... 836
Essentials of a good breaker 49
Eureka Hill Mill 388, 1184
Mining Company 1041
Mill, wear of iron in pans in..... 249
rubber 776
Eustis Mining Company..... 904
Eustis, W. E. C..... 833
Evans 1006
classifier 393, 476
G. H..... 1173
hydraulic classifier, details of in mills..... 395
jig 517
depth of partition in..... 524
sizes of sieves and plungers in..... 529
tables 689
used in mills 696
W. J., slope of launder in mill of Atlantic Copper Mining Company 373
Evrard, M..... 641
coal jig described by..... 588
Excelsior stone breaker..... 60
Expanded metal riffles 722
Expanding cone wash trommel 334
Extent of crushing desired..... 303
Extraction, percentage of..... 1115

F

Faber, E..... 1176
False bottoms 180
Farbaky, Stefan 836
Fargo guide 155
Farrel Foundry and Machine Company, 14—17, 21, 34, 52, 59, 87
duplex breaker, table of sizes of..... 21
Fastening the plates to the tables..... 725
Father de Smet Mill.....224, 385, 1108, 1174
details of plate screens in..... 169
dimensions of mortars in..... 165
Eureka rubber in..... 777
false bottoms condemned in..... 180
mortar linings in..... 166
rate of crushing in..... 165
shoe shanks and butts in..... 181
wear of shoes and dies in..... 183
weights of stamps and mortars..... 164
Faust, Henry, on capacity of jigs..... 602
Feed boxes used in jigs..... 549
Feeders 71
automatic 853
bibliography for 884
in gravity stamps..... 199
Feeding arrangements of stamps..... 122
of gravity stamps, method of..... 207
trommels 357
Feed of vanners, quality of..... 658
openings of mortars in gravity stamps..... 166
size of, in gravity stamps 207
to rolls, maximum size of..... 63
Fenner, C. M., on gold and silver in amalgam.... 763
Ferguson, H. T.....111, 143, 293, 478, 1182
Ferrand, Paul 227, 291, 727, 1173, 1182
Ferraris classifier 400
E 385, 386, 477, 478, 643, 729, 836, 1185
eccentric designed by 532
hydraulic classifier 478
intermediate jig 584
jig 522
magnetic separator 799
method of removing tailings..... 587
on capacity, etc., of jigs..... 597
shaking screen 342, 386
sieve frame used by..... 540
stay boxes used by..... 585
table 698
Ferreira Mine 1160, 1191
cost of hand picking at..... 487
stamp mill practice 221
Film gauge 1159
on a circular slime table, thickness of..... 695
sizing, experiments on size of grains, etc., for. 707
results of tests 719
tables 685
action of 644
bibliography for 727
buddles 704
building tables 704
continuous surface tables..... 686
intermittent surface tables..... 700
revolving circular convex slime tables. 686
surface tables 685
tables, belt 697
Final conclusions on hindered settling and suction 631
crushing 63
separators 490
Fine concentrates, definition of..... 495

Fine concentration test..... 1165
crushing, gravity stamps used for..... 314
Fineness of bullion..... 785
Fine sand and slime concentrators.....644, 700
kieves..... 726
riffles..... 720
Finest size jigged..... 606
Finger bars, cam sticks and overhead crab..... 199
Finishing machines..... 318
Fischer, George K..... 729
Fisher's steam stamp..... 142
Fixed circular convex slime tables..... 689
Linkenbach fixed conical table..... 689
Roberts table..... 691
sieve hand jigs..... 519
jigs..... 507
Hars type..... 507
Flange, Brownell..... 647
of amalgamating pans..... 244
Summerhayes..... 647
Flat River Lead Company..... 920
Floors, bins, and feeding arrangements of stamps..... 128
receiving..... 842
"Flouring" of mercury..... 751
Flow in launders, theory of..... 876
Fluorine, atomic weight of..... 1188
Fluorite, specific gravity of..... 1189
F. M. Davis Iron Works Company.....72, 87, 194
Fonseca..... 251
Foot..... 1187
Foote, A. E..... 1146
Forces, table of value of, acting at different angles in rolls..... 94
Forms of frames for gravity stamps..... 156
riffles..... 721
Forster breaker.....25, 57, 60
plan of..... 28
table of wear, in Mill 67..... 28
Fort Scott Foundry and Machine Company..... 76
Machine Works..... 111
Fortuna Mill, Bendigo, cleaning of plates in.... 762
order of drop in..... 214
repairing stamp stem in..... 188
wear of shoes and dies in..... 183
weight of stamps in..... 190
Foss..... 292
Foster, C. LeN..11, 56, 109, 142, 143, 223, 293, 295, 297—299, 334, 427, 476, 492, 639, 727, 832, 837, 1173
classifier tube designed by..... 621
on coarsest size jigged..... 605
finest size jigged..... 606
Wm..... 288
Foundation frame, pan bottom and central cone of amalgamating pans..... 241
mortar beds and sills and girders for stamps. 114
of stamp battery..... 145
Foundations and mortar beds for stamps, table of. 118
Four mineral separation..... 590
Fowle, J. C.....833, 1175
Fractional selection by shovel..... 844
split shovel, riffle, and Jones sampler.... 844
Fracture, effect of, in dressing ores..... 3
Fraenkel, A..... 476
Frames and tie rods of jigs..... 522
forms of, for gravity stamps..... 156
for stamp mills..... 152
of iron for stamps..... 158
rolls..... 63
steam stamps..... 118
Francou jigs..... 519
Franklinite, specific gravity of..... 1189
Franklin, J.....787, 1174
Mining Company.....993, 1017, 1181
Fraser and Chalmers..16, 41, 47, 48, 76, 78, 79, 87, 97, 102, 116, 121, 131, 150, 153, 164, 170, 172, 173, 181, 187, 189, 195—197, 199, 204, 209 240, 243—245, 257, 258, 280, 356, 1194
agitators made by..... 780
deep pocket classifier..... 477
dies made by..... 245
estimate of power for trommels..... 357
for 5-foot pans..... 249
figures on capacity of Frue vanners..... 642
Huntington Mill..... 280
power for jigs..... 603
vanners..... 643
quantities of water in vanners..... 659
slope of concentrating plane..... 659
travel of belt..... 659
Fraser and Chalmers, hydraulic classifier..... 616
muller and shoes made by..... 346
on feed of vanners..... 658
power for settlers..... 779
settler made by..... 777
shoe and die channels in amalgamating pan of..... 247
stamp..... 114
details of cylinder, water used, and capacity..... 126
dies..... 122
screen..... 121
shaft..... 123
staves in..... 123
valve action..... 127
efficiency of..... 133
frame of..... 119
mortar housing for..... 119
power for..... 131
pulley..... 123
safety devices in..... 127
table of details of mortar..... 130
foundations and mortar beds.... 118
sills and girders..... 118
valves and valve motion..... 126
vanner used by..... 635
weights of spider and driving cone made by 247
Frecheville, R. J..... 1183
Free crushing.....98, 313
milling gold ores..... 1165
settling and hindered settling defined..... 464
bibliography for laws of classifying by.. 475
classification by..... 474
effect of air bubbles on..... 464
density of liquids on..... 465
magnetism on..... 464
shape of particles on..... 464
size of particles on..... 464
specific gravity on..... 464
viscosity on..... 465
general principles..... 464
sorting by..... 889
velocities..... 476
Freiberg, Bilhars oblong movable sieve power jig used at..... 562
hand picking at..... 692
mill at..... 1087
products of hand picking at..... 698
skimming sieves in..... 576
water used on bumping tables at..... 679
Frenier spiral sand pump..... 585
Friability of minerals, effected by calcining..... 9
Friability under a blow..... 891
Friction and lubrication of cams..... 194
clutches..... 1096
journal..... 95
of spindle and jaw breakers..... 54
Friedeberg Mill.....236, 297
Friedensville Zinc Company..... 902
Friedrich Krupp Grüsonwerk.....22, 269
mill designed by..... 891
Friedrichssegen, hand picking at..... 681
Heberli magnetic separator..... 739
mill, sieve scale at..... 967
mine, magnetic separation used in..... 736
pointed boxes used at.....477, 479
Prussia, roasting ore at..... 815
sizes of ore hand picked at..... 697
Frisbee Lucop mill.....234, 267
bibliography for..... 294
Frisco Mill, Utah, old Paddock jigs used at..... 522
Fröbel's improved fine grinding mill.....232, 291
Froitzheim's spring stamp..... 142
Frongoch Mine..... 427
Frue vanner.....645, 1153
capacity of..... 662
modifications of..... 651
testing..... 1171
vibrations in..... 653
water used in..... 659
Fuller Mines..... 1091
Fulton Engineering Works..... 264
Iron Works..... 76
batea made by..... 683
breaker used..... 23
Furman, H. van F..58, 110, 225, 290—292, 294, 295, 297, 477, 642, 783, 838, 839, 1167, 1173, 1179
on capacity, etc., of jigs..... 597
connecting table with mortar..... 725
material for jig screens..... 545

G

Gaetzschmann, M. F..11, 56, 87, 142, 143, 223, 239—298, 295, 298, 299, 315, 334, 384, 476, 492, 639, 727, 787, 837, 1173
Gahnite, specific gravity of..... 1189
Galena-blende ore, Missouri, sizing tests on..... 303
treated at Diepenlinchen..... 670
Galena crushed by rolls..... 62
cost of hand picking of..... 488
film sizing tests on..... 707
in dolomite, crushed in Mill 25.....47, 98
separation from quartz 720
specific gravity of..... 1189
weight of 1190
with limestone, crushed by rolls..... 69
Gallium, atomic weight of..... 1188
Gallon 1187
of water 1187
Gandy belting 863, 1094
Gardiner breaker 57
Garnets, obtained by weathering at Meronitz, Bohemia 831
specific gravity of..... 1189
treated in Hooper's vanning jig..... 506
Garn, M..... 297
Gasoline, as power in mills..... 1091
Gassaway, A. D..... 789
Gate and dam discharges..... 577
center discharges 582
height of dam 579
gate 578
ratio of height of gate to size of feed..... 578
side discharge..... 580
tail discharges 581
Gates 138, 139
breaker .....36, 55—60
action of 39
comparison with McCully..... 45
table of details of..... 38
canvas plant of the Kennedy Mining and Milling Company 1037
feeder 854
for Tremain stamp mill..... 136
fine-pulp vanner, throw used in..... 658
George, design for belt 650
concentrator 653
hydraulic classifier 418, 477
Iron Works ..23, 34, 36, 45, 48, 51-53, 71, 73, 74, 77, 79, 87, 97, 136, 196
breaker 23
vanner, made by..... 651
rolls 109, 111
table of springs on..... 74
rules for power 309
Gauges 172, 223
for wire and plate..... 1194
Gayet 728, 1178
Gearing 1096
for cam shafts 198
Geddes and Bertrand..... 100
Geldenhuis deep mine, cost of hand picking at... 487
stamp mill practice 221
Estate Mine, stamp mill practice..... 221
Gem Mill 940
separator, Lockhart's automatic..... 430
General considerations about breakers and breaking 47
of jigs 522
construction of rolls..... 63
principles of ore dressing..... 1
remarks upon jaw breakers..... 38
table of roll data from the mills..... 64
Genesee-Vanderbilt Mining Company..... 892
Gentle Annie Mill 1035
George V. Cresson Company.....23, 72
Germanium, atomic weight of..... 1188
German overflow battery 229
stamps 230
sweeping table 703
tests on stone 201
Gersdorffite, specific gravity of..... 1189
Geyer, R 1177
rolls 70, 111
slime concentrator 460
settling apparatus 477, 478
G. G. Gates' hydraulic classifier..... 418
Giant Rock breaker 22
Gibbsite, specific gravity of..... 1189
Gilchrist, J..... 298
Gillon, Aug.....61, 299
Gilpin County concentrator..... 680
details of in mills..... 682
mills, screens used in..... 169
stamp mill 153
Gladiolinium, atomic weight of..... 1188
Glasdir Mine, Wales, tests with Elmore process at 832
Glenn, Wm..... 884
Globe battery stem guides.....155, 229
Glucinum, atomic weight of..... 1188
Gmehling, A.....293, 839
Gmelinite, specific gravity of..... 1189
Gneiss, weight of..... 1190
Goddard, S. H.....110, 834, 1179
Gold, action of gravity stamps on..... 314
amalgam 747
amalgamated plates used in milling..... 178
amalgams of 731
apparatus used for amalgamation..... 731
assay for, in Mill 55..... 304
in Mill 68..... 302
atomic weight of..... 1188
Coins Mines Company..... 1123
dredges, metal riffles used on..... 722
dredging 1007, 1009
plant at Yreka, California..... 1007
Golden concentrating plant..... 1183
Gate concentrator 681
Star Mill, clean-up in..... 201
mercury traps in..... 772
order of drop in..... 214
plain transverse troughs or riffles in..... 772
rate of crushing in..... 165
screens used in..... 175
Gold King Amalgamator 777
lost in amalgamation 786
milling, small steam stamps used for..... 136
mills 1017, 1046
size of grizzly used in..... 340
miners' pan 1152
mines in the Rand, South Africa 482
obtained from chips in Mills 65, 73, 74..... 482
on canvas tables 701
ore, chlorinating 1167
crushed by arrastra 238
Bryan mill 272
rolls 62
cyaniding 1167
free milling 1165
Gunnison, products of stamping 139
screening test on, at Mammoth..... 284
process of separating by clean-up pan..... 250
proportion of gold and silver on successive plates 763
in daily and hard amalgam 762
quartz mills, distribution of machines in.... 231
ratio of, to silver in plate amalgam..... 764
recovered on a cradle 723
cocoa matting 702
plates 749
riffles in Mill 56..... 725
Goldbrinnen..... 702
Gold, separation from quartz by amalgamated copper plate 4
specific gravity of..... 1189
stamping 224
advantage of using mercury in..... 208
stamp mills, clean up barrel in..... 264
treated on outside amalgamated plates..... 723
value of recovered by sweating 759
Goodale, C. W..100, 104, 110, 134, 142, 251, 278, 297, 313, 316, 476, 640, 728, 1130, 1175, 1176
experiment by, with edge runner..... 269
sizing tests of classifier work..... 396
tailings in Mill 40 and Mill 39..... 607
Gordon, H. A..... 235
Goslich 297
Göthite, specific gravity of..... 1189
Gottesgabe mill, capacity, etc., of jigs in..... 597
length and number of strokes in..... 594
Goupillière, Haton de la..11, 56, 109, 223, 298, 299, 315, 384, 476, 492, 639, 837, 1173
Gouyard, G. M.....834, 836
tests on roasting ores 815
Gover mill, arrangement of plates in..... 742
chuck block in..... 178
cost for water used in..... 206
screens used in..... 175
water trough in..... 746

Grab sample 845
Graded crushing 5, 103
  separation 5
Grain 1187
Gram 1187
Granby hand jig 898
  hand jigging at 893
  Mining and Smelting Company 903
Grand Victory Mining Company 1022
Granite, weight of 1190
Graphical representation of sizing tests 1139
Graphite, angle of nip required to crush 94
  coating on plates 751
  dressing 1074
  specific gravity of 1189
Grass Valley, Atwood amalgamators at 776
  Eureka rubber used at 777
  mill 228
  riffles containing mercury at 771
  trap 774
Gravel screens 339
Gravity stamps 113, 144, 224
  advantages of for fine crushing 214
    over rolls and grinders 222
  amount and temperature of water 221
  analysis of Morison's curves of the velocity of 215
  area of discharge for water 209
  bibliography for 222
  Boss or stamp head 185
  cams 191
  cam shaft 190
  canvas shield for screens in 177
  chuck blocks 177
  collars and bearings 190
  compared with Huntington mill 278
  cost of crushing by 205
  dies 179
  disadvantages of 222
  driving mechanism for cam shafts 197
  efficiency of, compared with steam 134
  false bottoms in 180
  feeders in 199
  height of discharge in 212
  kind of ore 207
  life of shoes and dies 184
  lip apron in 178
  location of the main shaft 197
  maintaining height of drop in 200
  mercury fed to battery in 208
  method of feeding 207
    setting up 200
  mortar covers in 167
    linings 166
  mortars 161
  mouth or feed openings in 166
  number and height of drops 214
  order of drop in 214
  placing screen in 170
  power for 201
  principle of action of 144
  proportion between weights of parts of 189
  putting on new shoes 201
  ratio between total horse power and that required to overcome gravity 205
  running of 206
  screen frames in 176
    openings in 167
  screens in 167
  shoe 181
    shanks and butts 181
  size of feed in 207
    holes in 210
  sockets in bosses in 187
  splash boards in 177
  stamp stem 187
  stay battery and overflow battery 214
  table of weights of parts 190
  tapers of stamp stems in 187
  the clean up 201
    pulley for belt transmission 197
    tappet 188
  triple discharge, two stamp mills 209
  used in California 231
  water pipes in 196
  wear of shoes and dies 182
Gray, J. W. 1184
Greased plate 890
Greasiness, definition of 4
  use of in dressing ores 4
Greasy flotation 890
Great Salt Lake water, weight of 1188
Greenstone, weight of 1190
Greenway, T. J. 642
Greenwell conveying grate and picking table 385
Gregorj, T. 479
Gregory Bobtail Mill, life of screens in 178
Grey 642
Griffin centrifugal stamp mill 224, 263
  Mills 231
  pulverizer 226, 299
  roller mill 226, 283
    bibliography for 297
Griffith's breaker 89
Grimsley, C. P. 1182
Grinder, sample 256
Grinding, in amalgamating pans 247
  machines, compared with pressure 313
Grist Mill or Buhrstone Mill 253
    bibliography for 291
Grizzlies 394
  and gravel screens, summary of 339
  or bar screens 326
Groke's ball mill 283
Gromier, G. 58, 493, 834, 1178
Gross, J. 1183
Grothe, A. 1182
Grüson ball mill 283, 300
    bibliography for 293
    table of details of 361
Guarding the work of machines 1111
Guess, H. A. 1178
Guides, Acme 155
  Fargo 155
  for stamps 128
  Globe battery stem 155
  in gravity stamps 155
Guide timbers, in gravity stamps 155
Gunnison, (Colorado) ore 129
Guston mine, rock house at 485
Gute Hoffnung Mill 1102, 1135, 1136
Gypsum, specific gravity of 1189
Gyrating breakers 36
    McCully 44
  screens 342
  vanners 657
    Ellis concentrator 657

H

Habermann, J. .110, 111, 224, 229, 292, 293, 296, 299, 385, 641, 728, 836, 1176, 1177, 1184
  eccentrics described by 532
  figures on power in jigs at Przibram 603
Habets, A. 642
Hadfield, R. A. 57, 59, 60
Haile Gold Mine 269, 296, 1175
    care of mercury in 735
    on connecting table with mortar 725
Hall breaker 56-58
Hallett, on slope for launders 873
  rules for power 309
Hallett, S. I. 88, 304, 1004, 1114, 1119, 1151, 1189
Hallett table 675, 1172
  three mineral separation in Mill 49 676
Hallidie's corrugated battery screens 226
Hall, R. G. 99
Hall stamp mill 150
Halse, E., on plates in Colombia mines 749
  preparation of silver plated plates 755
  tests on loss of gold with plain copper plates, 749, 750
Hammer and spring on Collom jigs 536
Hammers, breaking by 9
  cobbing 11
  drop 12
  spalling 11
  steam 12
  table of sizes used 11
Hammerwäsche Mill, capacity, etc., of jigs in 597
  length and number of strokes in 5
Hammond corrugated cylinder feeder 198, 8
Hammond, J. H. 225, 229, 286, 782, 1124, 11
    on connecting table with mortar 7
      cost of plating copper plates 7
      hydraulic mining 7
      tables for supporting plates 7
      use of potassium cyanide on plates 7
  Manufacturing Company 209,
  steam stamp 1
Hancock vanning jig 6

Hanctin's Mill 235, 296
Hand breaking 56, 57
advantages of 13
feeding 223
jigging 892
Joplin District, Missouri 894
jigs 496
table of practice in the mills 496
with fixed sieves 519
picking 490, 492, 889
accompanied by sledging 490
after breaking by hammers 9
belt, rope and plate conveyors for 489
bibliography for 492
block system 481
combined with screening on grizzlies 340
comparison of picking tables 491
cost of 487
definition of 480
general considerations on 481
in the mill 485
mine 481, 492
rock house 483
of nugget copper in Mine 44 54
picking chutes 489
tables 488
revolving circular table 490
shaking tables 489
size of ore 486
speed of revolving table used in 491
stationary tables 488
test 1163
sampling 844
cheese-scoop sampler 844
dipper or bucket sample 845
fractional selection by shovel 844
split shovel, riffle and Jones sampler. 844
grab sample 845
moisture samples 846
pipe sampler 845
quartering 844
sledges 10
kinds 10
Hanson, Paul 139
Hard amalgam, gold and silver in 762
Hardman, J. E. ..60, 145, 165, 180, 187, 192, 196, 220, 225, 228, 788, 789, 1184
on absorption of amalgam by copper plates .. 765
connecting table with mortar 735
graphite coating 751
method of amalgamating copper plates 752
removing stains on plates 762
plain copper plates 748
Hardness, Dana's table of 2
effect of, in dressing ores 2
Hard rock phosphate deposits 895
Hardwick, F. W 642
Harmotome, specific gravity of 1139
Harney Peak Mines, South Dakota 1180
Harrietville Mill 236
plates in 748
Harrington and King 168, 169, 355
clear punched slotted screens 169
list of elongated punched holes 370
plate screens 369
screens, table of dimensions 168
Harshaw Mill 224, 290, 385, 1174
bullion in squeezed amalgam in 783
classifier used at 426
fuel for retorting amalgam 782
kind of ore crushed in 207
wear of shoes and dies in 249
Hartman Mine, power jig used at 506
Hartzell Concentrating Company 1055
Harvey's high speed stamp 227
Harz jigs 507
compared with Collom 515
construction of 524, 525, 527
tailboard in 551
using one shaft and eccentric for plungers 530
Hatch and Chalmers 492
estimate of cost of hand picking on the Rand 487
F. H 1173
Hauer, J. von 229
Haures, P 298
Haussuer, A 229
Haverstraw sandstone, tests on, at Watertown Arsenal 300
Heads and concaves on spindle breakers 47
Heard, John, Jr 288, 298, 822
on capacity of Krom jig 825
tests on antimony ore 823
Heating for decrepitation 829
the mill 1098
Heberle discharge 531
E. 1177
O. 834
Heberli, E 225, 292
figures on limits of sieve scale 349
magnetic separator 799
mill 233, 257
bibliography for 292
compared with Schrans mill 292
power required for 260
system of screening 364
wet separator 810
Heberwasche 421, 530
used at Mechernich 477, 478
Hecla Consolidated Mining Company 1179
Mill 1179
Hector gold stamp mill 1184
Mining Company 1014
Hedburg, E 643
Height of dam in jigs 579
discharge, in gravity stamps 212
drop in gravity stamps 214
gate in jigs 579
tailboard in jigs 550
Heinstein's ball mill 294
Helena and Frisco mill 1178
Mining Company 942, 943
Helium, atomic weight of 1188
Hell upon Earth Mill 893
Helmhacker, R 225, 493, 1183
Hematite, crushed by Minnesota Iron Company .. 51
method of washing at Iron Mountain, Missouri 334
specific gravity of 1189
treated by jig at Iron Mountain, Missouri 500
Vermillion, action of Monarch breaker on 21
weight of 1190
Hendrie and Bolthoff 427
five-stamp mill 226
mortar 226
Hendy and Meyer 76
Hendy Challenge feeder 199, 353
for Tremain stamp mill 136
used in Huntington mill 278
concentrator 683
Machine Works, batea made by 683
Henninger's limonite washer 896
Henrich, C 1176
Henry, A 57, 110, 224, 325, 477, 641, 728, 833, 1176
on capacity, etc., of jigs in mills 597
length and number of strokes in jigs .. 594
Faust jigs, slope of sieves in 548
width of sieves in 591
Faust Mill 901
Nourse Gold Mining Company, sand wheel used by 865
Hercules rock breaker 22
Hering 885
C. 1187
figures on discharge from launders 877
Hessite, specific gravity of 1189
Heuseschen, furnace designed by 829
Hibernia concentrating plant 1185, 1188
Buchanan magnetic separator at 802
Hick revolving grizzly bars 335
Hicks, J 1180, 1188
Hidden Treasure Mill 1035
life of screens in 173
rate of crushing in 165
High speed of rolls, advantage of 88
Hille, F 225, 477, 643, 788, 1178, 1181
Himmelfahrt Mill 936, 1087, 1099, 1102, 1116, 1135
sieve scale at 367
Himmelsfürst mine, pneumatic belt concentrator ... 818
Hindered settling 389
and suction, final conclusions on 631
defined 464
general principles 616
pulsion jig tests of 622
results of tubular classifier tests on 613
tubular classifier tests on 610
Hoagland breaker 57
Hobson, J. B 225, 290
Hochstedt apparatus 816
Hochstrate 479

Hodge, C. J. ... 522
Collom jig made by ... 519
disc motion applied by ... 536
jig designed by ... 517
new jig ... 522
Hodges, A. D. ... 291
A. D., Jr. ... 251, 884, 1175
Hodge's classifier ... 476
Hoffman ... 238, 1138
O ... 291
Hoffman, W. H. ... 298, 1175, 1180
Hofman, H. O. 57, 164-166, 224, 228, 385, 787, 884, 885, 1175.
Hog trough classifier ... 476
Lake Superior ... 390
Holes, arrangement of in screens ... 168
in screens, relation of thickness of plates and wires to diameters of, as found in the mills ... 372
relation of thickness of plates and wires to diameters of, as quoted ... 372
size of, in sieves ... 546
Hollibaugh, J. R. ... 643, 1181
Holmes and Blanchard ... 253
Homestake Mill ... 224
dies used in ... 163
dimensions of mortars in ... 165
tappets in ... 189
guides in ... 155
life of cam shafts in ... 190
mouth in mortar in ... 166
rate of crushing in ... 165
ratio of gold to silver in plate amalgam in ... 764
screen frames in ... 177
screens used in ... 175
shoe shanks and butts ... 181
wear of shoes and dies ... 184
weight of stamps and mortars ... 164
Mining Company ... 1025, 1133, 1181
mortar ... 228
Hooper, E. H. ... 477
pneumatic concentrator ... 830
vanning jig ... 505
Hope's breaker ... 61
compound battery ... 227
Hopkins, T. C. ... 1183
Hoppe, O. ... 499, 641, 643, 1186
tests on suction ... 630
Hoppers and housing ... [illegible]
Hopper-shaped shallow pocket classifiers ... 400
unwaterer ... 476
Horizontal logs ... 228
mills ... 255
shafts, of amalgamating pans ... 248
Horn pan ... 291
Hornsilver Mining Company ... 1015, 1181
Horn spoon ... 1153
Horse power ... 1185
Hotop ... 112, 1185
Housing ... 83
Howe, H. M. ... 188, 833
Howell, John ... 142, 227, 643, 1183
How and Mill ... 232, 235, 290
pulverizer, No. 1, bibliography for ... 297
riffles ... 722
Howland's rotary stamp mill ... 225
stamp battery ... 229
Huanchaca Mining Company ... 207
Hübner ... 729, 1196
Huet and Geyler's settling cylinder ... 478
Hughes Daviot electromagnet ... 812
pneumatic stamp ... 142
Hundt's settling tub ... 478
Hungarian riffle blocks ... 725
Hungary mercury well ... 770
Huntington Mill's ... 110, 228, 235, 276
bibliography for ... 296
capacities of ... 281
centrifugal force in ... 278
compared with Bryan mill ... 275
gravity stamps ... 278
cost of crushing by ... 281
die rings and roller shells ... 280
dimensions and weights ... 280
Fraser and Chalmers' figures on ... 280
purpose, power and capacity ... 280
screens used in ... 281
used in California ... 231
Mill 21 ... 413
Huntington mills used near Tremnitz, Hungary ... 282
oscillating stamp ... 237, 239
pan ... 291
Hunt, R. ... 56, 104, 109, 143, 143, 223, 252, 290-296, 298, 299, 334, 476, 639, 1172
description of buddle jig ... 518
Hurdy Gurdy water wheels ... 1069
Hurst, George H. ... 1173
Husband and Sholl stamps ... 141
pneumatic stamp ... 143
Hutch, discharges into the ... 586
Hutches ... 533
slope of in jigs ... 533
Hutchinson, W. S. ... 729, 1184
Hutch product, definition of ... 495
Huxley, E. C. ... 67
Hydraulic classifier ... 227
Bilharz ... 475
deep double trough ... 418
pocket ... 409
double cone ... 426
Fraser and Chalmers ... 416
G. G. Gates' ... 418
hopper-shaped shallow pocket ... 400
measures of a four-spigot, with sorting columns of 3-inch pipe ... 403
purpose and essential qualities of ... 220
sizes of feed to ... 220
the Dalton ... 230
Ferraris ... 400
Richards shallow pocket ... 401
Yeatman ... 220
trough or shallow pocket ... 229
tubular ... 421
giants ... 55, 233
The Monitor ... 233
jigs, compared with air jigs ... 525
Hydraulicking ... 1066
Hydraulic mean depth ... 876
mining ... 721
tables ... 1197
water for jigs ... 537
quantity ... 538
table ... 536, 537
in classifiers ... 227
Hydrogen, atomic weight of ... 1188

I

Ice, specific gravity of ... 1189
Ichon ... 830
Idlewild Gold Mining Company ... 1071
Idria, Austria, hand picking at ... 492
waste rock in mine at ... 481
I Know Mining Company ... 907
Ilmenite, specific gravity of ... 1189
Imlay ... 681
Inch ... 1197
Included grains ... 518
Indium, atomic weight of ... 1188
Ingalls, W. R. ... 1183
Inman, A. L. ... 57
Inscribing circles and clearance used by mills ... 196
Inside amalgamated plates ... 176
amalgamation ... 223
Instructions for mounting Blake breaker ... 13
Intermediate bins ... 943
Intermittent automatic discharge ... 594
movable sieve power jigs ... 566
or tank system of working amalgamating pan ... 345
surface tables ... 700
blanket tables ... 702
carpet tables ... 703
cocoa matting ... 702
Cornish "frames" ... 704
German sweeping tables ... 702
International Emery and Corundum Company ... 1073, 1079
Interstitial currents in settling ... 636
Iodine, atomic weight of ... 1188
Iodyrite, specific gravity of ... 1189
Iridium, atomic weight of ... 1188
specific gravity of ... 1189
Iridosmine, specific gravity of ... 1189
Iron, atomic weight of ... 1188
battery cloth ... 171
City Mill, efficiency of stamp mill in ... 229
cloth screens ... 170
crushing ... 69
loss of, in amalgamating pans ... 349
Mountain, Bradford eccentric jig used at ... 501

Iron Mountain Mill..... 895
Mining Company 897
ore 896
ores, magnetic separation of..... 790
pipe, table of sizes of..... 406
plate screens 173
sieve frames 539
specific gravity of..... 1139
wear and loss of, in amalgamating pans..... 349
Isel Corundum Company..... 1133

J

"Jack," definition of 900
Jacket, steam, for amalgamating pan..... 243
Jackson 76, 87
J. W..... 111
James Bogardus eccentric mill.....; 259
Carkeek classifier 416
Jamieson, M. B.....142, 227, 643, 1182
Janin, Louis, Jr.....111, 227, 251, 290, 291, 739
on drop, on amalgamated plates..... 743
Muntz metal plates 750
silver plated plates..... 748
squeezing amalgam 781
the care of mercury 785
Jaquet, J. B..... 1178
Jaw and spindle breakers, table of products of.. 53
breakers .....13, 55—57
capacity of 53
comparison with spindle 51
cost of 53
distribution of crushing in mill..... 54
fine crushing in 54
friction 54
general remarks upon 33
having greatest movement on largest lump 28
intermittent action of 55
kinds of 13
necessity for simplicity of action in.... 36
number used 51
power of 53
principle of action 52
running cost 54
size and shape of mouth..... 54
table of cost of crushing by..... 50
taper 53
weight of 52
with equal motion on coarse and fine lumps 25
greatest movement on smallest lump.. 13
plates, comparative wear of metals for, in Blake breakers 48
Jeffrey Manufacturing Company..... 343
details of elevator buckets made by... 864
rubber belt conveyor 859
Jenisch ball mill 233, 261
Jenkins, C. V..... 1184
Jenks, Charles N.....235, 1183
Jerking table 1152
action of 644
Bartlett 492
testing 1171
troughs 861
J. H. Frenier and Son, spiral sand pump made by. 870
Jig bed inspection 1171
Jigging mills using hand jigs 892
mixed sizes, author's tests on..... 630
power used in 602
test 1165
with a stay box 551
Jigs 1150
accelerated 510
mechanisms in..... 533
air 820
and vanners, results of, compared with Elmore process 832
Baum 519
Bilharz circular plunger..... 518
circular sieve power..... 504
oblong movable sieve power..... 503
bottom bed of, products of..... 495
Bradford eccentric 500
buddle 513
cam and gravity in Stutz coal jigs..... 537
cam and spring in..... 537
capacity of 599
center discharge in..... 582
circular 518
Jigs, clearance of the plunger and its attachment to the connecting rods 529
coarse concentrates of..... 494
Collom 510
Conkling 503
connecting rods for plunger in..... 530
construction of 524, 527
continuous movable sieve power 499
Cooley 522
cost of 604
Jig screens, cost of..... 547
life of 546
Linkenbach's figures on..... 547
materials for..... 545
table of 540
Jigs, definition of hutch product 495
Diescher coal 520
discharges into the hutch 586
with unwatering sieves 586
disc motion in..... 536
disposal of concentrates in..... 586
double discharge in 583
drop between sieves in..... 549
eccentric in 531
elliptical gear in..... 536
fine concentrates of..... 495
fixed sieve 507
four mineral separation 590
frames and tie rods..... 522
frames of 522
Francou 519
gate and dam discharges 577
general considerations of..... 522
hammer and spring 536
Hancock vanning 504
hand 495
practice in the mills..... 498
with fixed sieve 519
Harz compared with Collom..... 515
type ..... [illegible]
height of dam in..... 579
height of tailboard in..... 550
Hooper's vanning 505
hutches 573
hutch product of 495
hydraulic water in 537
quantity in..... 588
Jig sieves, percentage of opening..... 546
Jigs, intermittent automatic discharge..... 584
movable sieve power 506
iron sieve frames 539
Krom's pneumatic 824
labor for running 604
length of sieves 592
stroke or amount of throw..... 594
life of 604
limit of sizes jigged 604
linings of 527
longitudinal partition 524
material of bottom bed..... 573
materials for tanks 522
McLanahan's 518
method of feeding 548
running 551
movable sieve 495
hand 496
New Century Drop Motion 537
number of sieve compartments in..... 588
strokes 592
Parson and Fisher 517
pipe discharge in..... 583
plunger in..... 528
power used 602
principle, purpose and definitions..... 494
purpose and adjustment of..... 552
removal of coarse concentrates in..... 576
tailings in..... 587
Robinson movable sieve power..... 504
shafts and pulleys in..... 532
side discharge in..... 580
sieve frames 538
sieves for three mineral separation..... 590
two mineral separation..... 589
sieve wires and prices 547
size of grains of bottom bed..... 575
sieve hole in 573
skimming the sieves 576
slime 518
slope of hutches in..... 522
sieves 542

Jigs, spigots in 537
stay boxes for automatic discharges 584
Stuts coal jig 532
tail discharges in 581
thickness of bottom bed in 575
top layer of, products of 496
under-piston 530
unwatering boxes 532
Utech 519
whole bed of, products of 496
width of sieves in 581
Jig tailings, definition of 494
tank, materials for 532
testing 1170
Johannesburg Mill 913
Johnson 294
figures on sampling 852
F. M. 284
G. R. 335, 1175
J. E., Jr. 477, 885
mechanical sand shoveller 979
Paul 824
data on sampling 849
Johnston concentrator 662
John Taylor and Company 1137
Jones, Clemens 832, 1175
sampler 844
Jordan's centrifugal grinder and amalgamator, 294, 296
pulveriser 296, 299
Joseph Wharton Mill 1053, 1064, 1117
Mining Company 1053
Joshua Hendy Machine Works 196, 299, 229
breaker used 22
Norbom concentrator made by 663
Journal friction 95
Journals for rolls, table of 72
lubrication and care of 1097
Jubilee and Salisbury Mine, stamp mill practice in 231
Jumpers' deep mine 1191

K

Kalb, Courtenay de 257
Kansas zinc regions 892
Kaolinite, specific gravity of 1139
Kaolin Manufacturing Company 1149
washing 1075
Karlik gyrating screen 386
oscillating grizzly bars 385
Karop movable grizzly bars 385
Kás, A. 386
Káván, side-bump table used by 663
Kavicic, J. 722
Kayser, H. W. F. 1182
Kegelmuhle, cone mill or coffee mill 265
Keith, N S. 789
on absorption of amalgam by copper plates 765
copper plates coated with amalgam 747
Kemp, J. F. 1188
Kennedy Mining and Milling Company 1031
Kensington, F. 335, 1183
Kent, William 50, 93, 96, 97, 104, 135, 173, 206, 260, 278, 315, 1097, 1173, 1194
Kessler magnetic separators 811
Key, A. C. 492
Keystone Consolidated Mining Company 1032, 1037
Mill, weights of stamps and mortars 164
Kia Ora Gold Dredging Company 1008
Kieves 726
action of 644
bibliography for 727
continuous 727
details of in mills 726
Kilo 1187
Kilogram 1187
Kilometer 1187
Kilo of water 1187
per square centimeter 1188
Kimberley, weathering diamonds at 831
Kinds of crushing machines 8
ore, in gravity stamps 207
surface on slime tables 695
King 1039
Brothers Mill 1079, 1117
Clarence 222, 290, 787, 1173
Kinkead ball mill 234, 295
mill 231, 235, 276, 296
Kirby, E. B. 643, 1179, 1184, 1190
Kirschner, L. 56, 100, 223, 293, 296, 476, 492, 630, 727, 729, 787, 802, 830, 1173
Klein, L. A. 1182
moving grizzly bars 896
Klein's solution 1156
Kley breaker 55
Knee frames for gravity stamps 153
Knight wheels 1089
Knobs, rolls with 104, 106
Knochenhauer, B. 226, 290, 722, 1177
Koch 230, 291
E 641, 1177
Koch, H 1186
on capacity, etc., of jigs 597
length and number of strokes in jigs 594
Kohinoor Mill 907
Köhler 643
Kolshorn and Strecker's grinder 232, 292
Kosmann 297
Kossmann, B. 292
Krause's pneumatic stamp 141
Kretschmer, Franz 1183
Krom breaker 56, 60
movement on in Mill 22 94
Krom's pneumatic jig 294
products from, on De Soto mine ore 294
results on Seminole ore 295
Krom, S. R. ..21, 30, 31, 45, 57, 59, 60, 65, 70, 72, 73, 77, 87, 88, 100, 110—112, 280, 296, 316, 326, 329
Krom's rolls 109-112, 294
standard rock breaker, section of 31
Krupp ball mill 269
F 299
Krypton, atomic weight of 1188
Kubale 643
Kunhardt, figures on clearance of plunger 530
size of grains at Laureuberg 572
in bottom beds 576
slope of jig sieves 548
thickness of bottom bed in jigs 576
on capacity, etc., of jigs 597
coarsest size jigged 606
drop between sieves in jigs 550
finest size jigged 606
intermittent discharge 594
length and number of strokes in jigs 594
of sieves 593
life of jigs 604
screens 547
limit of sizes at Cornwall 600
pipe discharge 582
removal of tailings 582
revolution of slime tables 696
slope of slime tables 694
stay boxes 585
the use of the stay box 551
width of jig sieves 601
W. B. ...56, 87, 109, 142, 232, 276, 292, 296, 296, 296, 315, 354, 384, 476, 492, 639, 642, 727, 822, 1112, 1146, 1173, 1186
Kutscher 1186
H 642

L

Labor, cost of, in pan amalgamation 980
for running jigs 604
in the mills 1161
Labradorite, specific gravity of 1139
Labyrinth 476
Labyrinths and runs 447
Lady Barkly mill, weights of stamps in 190
Lake Harold gold stamp mill 1178
Lakes, Arthur 1183
Lake Superior, center discharge at 532
copper mills..114, 475, 1085, 1089, 1092, 1096, 1103, 1166, 1169, 1112
disposal of concentrates in 536
mortar blocks in 142
mines, rock houses at 485
rock, settling slimes from 453
size of grizzly used for 240
cost of die, etc., at 122
hydraulic classifier, products of in Mill 46 301
products of in Mill 45 301
hog trough classifier at 476
details of, in mills 300
old form 300
jigs used at 515
life of Collom jigs at 604

Lake Superior, method of feeding jigs at..... 549
mills automatic discharge in..... 577
native copper mills, disposal of concentrates in 587
size of grains in..... 693
Uren table used at..... 698
region, drop hammers used in..... 12
steam hammers used in..... 12
stamp mill, power used at..... 310
Lamar, J. R. de..... 284
Lamberton mill 234, 295
Lamprecht on material for bottom beds..... 574
R.....56, 109, 292, 298, 384, 476, 492, 574
Lancaster breaker 59, 60
Landis, H. K.....477, 642, 1178, 1179
Landolt 1188
Land pebble phosphate deposits..... 895
Company 897
Langguth, E..... 837
Langley's improved dry crusher 235, 274
bibliography for..... 296
Lanthanum, atomic weight of..... 1188
Last Chance Mill 945
Laszlo amalgamator 777
Lateral thrust, right and left hand cams..... 195
Lattes, O 1177
Laumontite, specific gravity of..... 1189
Launders 872
bibliography for 885
hydraulic mean depth 876
mean velocities of water in..... 877
quantities of water in..... 878
rectangular 877
speed of water current necessary to carry sand. 878
theory of flow in..... 876
wetted perimeter 876
Laurenburg mill 961, 1086, 1116
hand picking at 493
range of sizes jigged at..... 609
sieve scale at 367
sizes of ore hand picked at..... 487
wear on Schranz mill at 276
Lauthenthal, hand picking at..... 492
mill 1086
range of sizes at..... 609
sieve scale at..... 367
sizes of ore hand picked at..... 487
trough classifier at 479
Law of free settling particles, method of investigation of, in surface current box classifier.... 434
results of investigation of, in surface current box classifier 434
Lawrence centrifugal pumps, details of..... 869
H. L..... 1182
Machine Company, pump from catalogue of. 869
Laws of classifying by free settling in water, bibliography for 475
crushing 300
bibliography for 315
jigging, bibliography for..... 639
L. C. Trent and Company 270
Leach, A. H..... 492
Leaching copper ores 1167
silver ores with hyposulphite 1167
Lead 900
and silver ore, crushed by Blake breaker and Chili mill 271
atomic weight of..... 1188
ore, at Lisburne mines, Wales 329
size of grizzly used for..... 340
treated in Mills 24, 25..... 69
removal of 251
specific gravity of..... 1189
Leadville Gold and Silver Extraction Company.. 1070
Leather belts 1093
Leavitt, E. D., pump designed by..... 872
stamp .....114—116, 118, 142
details of cylinder, water used, and capacity 126
mortar housing 120
rings 122
screens 121
shaft 128
valve action 127
efficiency of 133
frame of 119
mortar housing for..... 119
power for 131
safety devices in..... 127
steam cylinders and valves in..... 123
Leavitt stamp, table of details of mortar..... 120
foundations and mortar beds 118
sills and girders 118
Ledoux, A. R., data on sampling 849
figures on sampling 853
Leffel wheels 1089
Leggett, T. H.....226, 335, 339, 1178
Lehigh Zinc and Iron Company, cost of screening at mill of..... 941
Lehman, F..... 1178
Leighton, George 1183
Length of sieves in jigs 592
strokes or amount of throw..... 594
table of measurements of..... 1187
Lepidolite, specific gravity of..... 1189
Lester breaker 56
Levant Mill 1082
Lever pattern of Blake breaker 21
Leviathan pulverizer 236, 299
Lewis, J. V.....57, 1176, 1184
Libbey, W. L., on absorption of amalgam by copper plates..... 765
sodium amalgam 783
Lidner, P. G.....57, 492, 640, 839, 1175
on length and number of strokes in jigs. 594
Life of jigs 604
shoes and dies..... 184
sieves in jigs 846
trommel screens 353
Lighting 1100
Lightner Mill 235, 296
Limestone, Missouri, jaw plates used in crushing. 43
weight of 1190
Limits of concentration 1118
sieve scale 368
sizes jigged 604
speed and height of drop due to the mortar.. 213
due to power 215
Limonite ore, results of classifying in Mill 5.... 405
Limonite, specific gravity of..... 1189
treated by jig in Mill 4..... 502
washer, Longdale 396
weight of..... 1190
Lincoln Mill, dies used in..... 180
Linder, S. E..... 1178
Lindgren, W..... 290
Linings for mortars..... 166
of jigs 527
Link belts 963
Linkenbach, C..11, 56, 87, 109, 223, 259, 292, 315, 332, 334, 384, 433, 434, 476, 492, 639, 727, 728, 832, 1173
data on capacity of trommels..... 359
cobbing 480
description of classifier.....412, 416
spigot discharge 333
design of classifier 421
dimensions for V-boxes..... 421
figures on concave slime tables..... 692
jig screen 547
limits of sieve scale 369
size of sieve hole 573
spiral screen 363
fixed conical table 689
convex slime table, capacity of..... 697
table, radius of..... 697
on capacity, etc., of jigs..... 597
of his fixed slime table 697
coarsest size jigged..... 605
density of pulp on slime tables..... 696
drop between sieves in jigs..... 550
finest size jigged..... 606
labor for running jigs..... 604
length and number of strokes in jigs.... 594
size of grains on slime tables..... 693
skimming sieves 576
slope of jig sieves 548
slime tables 694
three mineral separation in jigs..... 580
two mineral separation..... 589
size of feed to hydraulic classifiers recommended by 339
Linkenbach's pointed boxes 441
Linnaeite, specific gravity of..... 1189
Linton's level 1159
Lintorf, Prussia, disintegrating blende and pyrite at 830
Lion Mill 234, 294
Lip apron of mortars 173
plates 739
Lisburne mines, Wales 329

Liter 1187
of water 1187
Lithium, atomic weight of 1188
Loam, M. 142
Location of mills 1085
the main shaft in gravity stamps 197
Lock, A. G..56, 142, 143, 223, 290, 294, 297, 299, 476, 639, 787, 837, 1173
C. G. W. 789, 1173, 1182
Locke, C. E. 477
Lockhart's automatic gem separator 430
tubular classifier 476
Log washers 55, 330
compared with wash trommels 333
horizontal logs 328
plants using 895
the Thomas 324, 335
washing plant 335
at Longdale, Virginia 335
Lohnert's ball mill 293
Longdale Iron Company 477
clarifying reservoirs used by 461
log washer 333
Longitudinal partition in jigs 524
Longridge, C. C. 229, 1006, 1173, 1179
Long ton 115
Loram, S. H. 783
Loring belt 647
Loring, W. J. 166, 181, 184, 208, 224, 266, 788, 1176
on dressing and cleaning plates in Mill 73 757
use of cyanide on plates 757
Losses of gold in amalgamation 786
Loss of iron in amalgamating pans 249
mercury 786
in amalgamating pans 250
Loss in weight by retorting 783
Louis, H. 11, 56, 109, 142, 143, 153, 164, 167, 187, 188, 197, 200, 204, 205, 207, 208, 219, 220, 222-224, 226, 238, 290, 297, 316, 324, 476, 787, 839, 1173
method of preparing copper plates 753
on connecting table with mortar 735
copper plates coated with amalgam 747
plate stains 750
gold and silver amalgam 731
melting 784
retorting amalgam 781
squeezing amalgam 781
tables for supporting plates 733
use of sulphuric acid on plates 753
Lowe, F. A. 226, 291, 1179
Lowe's Mill 233, 294
Lowry National Breaker ..... 45, 58—60
Lubrication and care of journals 1097
of amalgamating pans 247
cams 194
Lucop and Cook Mill 294
Ludlow, E. 1180
Luhrig jig, removal of tailings in 588
pulsion jig 538
table 669
capacity of, at Diepenlinchen, Prussia 670
Lührmann, F. W. 295
Luquer, L. M. 1173
Lurmann 836
Luster, use of in dressing ores 3
Luttermann 110
Lyon Mill, details of rings in 244
discharge spout in 241
heat used in amalgamating in 248
lining of amalgamating pan in 244
muller and shoes of amalgamating pan in. 246
wings of amalgamating pans in 245
Lyon Mountain, New York 901
Conkling jig used at 503

M

Machine breaking 56
distributors 857
Mactear, J. A. 838
Madison mill of the Utica Company 1024
Magalia drift mill, riffles containing mercury in. 770
Magic crusher 236, 299
Magnesite, specific gravity of 1189
Magnesium, atomic weight of 1188
Magnet 1156
Magnetic combination mills 1060
concentration 790, 1053
bibliography for 832
designing of electromagnets 790
field, action of substances in a 796
Magnetic separation, of iron ores 790
separator formerly used at Przibram 812
separator, Rowand 807
separators, classification of 796
using drums 797
Ball-Norton or Monarch 799
Buchanan 803
Dellvik-Gröndal 804
Ferraris 799
Heberli 799
Payne 799
Sautter 796
Siemens 803
Siemens and Halske 798
Wenstrom 800
with conveying belts 804, 811
Conkling dry 809
wet 810
Edison for fine materials 810
Heberli wet 810
Hughes Daviot electromagnet 812
magnetic separator formerly used at Przibram 812
magnetic separator used at Monteponi 810
Wetherill's 804
Magnetism 890, 891, 1053
change of, by heat 4
roasting for 813, 890
use of in dressing ores 4
Magnetite ore, Port Henry, products of crushing. 100
specific gravity of 1189
treated at Lyon Mountain, New York 503
Malern, Austria, hand picking at 493
roasting ore at 815
sizes of ore hand picked at 487
Main shaft, location of 197
Maintaining height of drop in gravity stamps .. 200
Maintaining plates of the right consistency 756
Main, William, Jr. 226, 229
Malachite, specific gravity of 1189
Mammoth, Arizona, screening test on gold ore at. 284
Mill, screens used in 175
Mining Company 1065
Manganese, atomic weight of 1188
specific gravity of 1189
Manganite, specific gravity of 1189
Marcasite, specific gravity of 1189
Mardin, E. M. 789
Marsaut, J. B. 641, 643
Marsden breaker ..... 56—61
Martin's buddle 1080
Maryland Mining Company 1619
Massachusetts Institute of Technology, tests on distribution of amalgam 764
effect of temperature on amalgamation. 767
Materials and cost of screens 173
for jig screens 545
tanks 522
roll shells 68
screens 354
wearing parts 43
of amalgamated plates 747
bottom bed 573
screens in mills 350
shafts 351
Mathet 837
Mathes, A. 229
Mathines Creek Mine, capacity of Huntington mill in 281
Maurice, P. E. 477, 643
Maximum size of feed to rolls 63
Maxwell's law of magnetic attraction 791
Mayflower drift mill riffles containing mercury in. 770
Mill, concentrator used at 683
electric current in 753
screen used in 343
shaking plates in 740
unwaterer in 450
Maynard, G. W. 643, 1185
May, W. J. 1179
McCallum, A. C. 1096, 1178
McCormick, E. 1184
S. G 1183
McCully breaker 44, 55, 59
comparison with Gates 45
table of sizes of 44
R 44
McDermott and Duffield, on shaking plates 741
W. 401, 787, 1173, 1176

McDonald, B.....175, 207, 209, 227, 410, 1174, 1181, 1190
McDowell, F. H.....833, 1176
McFarlane and Company.....73, 76, 150, 153, 196
McLanahan and Stone..... 324
double log washer..... 324
jig 518
pulsion jig 538
sieve frame in..... 538
McNeill, H. C..... 825
Means of getting a whole current in settling tanks 451
Measures, equivalents of..... 1187
of a four-spigot hydraulic classifier with sorting column of 3-inch pipe..... 402
Mechanical bates 683
sampling 846
Brunton sampler 847
Collom sampler 847
comparison of machines..... 848
stirring 320
unwatering 879
Mechanism accelerated, in jigs..... 533
crank arm 535
sliding block 533
Mechernich Mill, sieve scale at..... 367
siphon separator 477, 530
Meier, E. D..... 642
J. W. 292, 293, 296, 335, 492, 670, 729, 884, 1180
Meihe's pulverizer 236, 299
Meinecke 225, 477
classifier 430, 477, 478
spitzluitte 425, 477
Melting 784
Mercury, atomic weight of..... 1188
care and purification of..... 785
fed to battery in gravity stamps..... 208
loss of 786
in amalgamating pans 250
properties of 730
rifles containing 770
specific gravity of..... 1189
traps 768, 771
Black Hills trap..... 773
box traps 773
cleaning up 774
Grass Valley trap..... 774
plain transverse troughs or riffles..... 772
transverse with gates.....772, 773
wells and riffles containing mercury..... 768
advantages and disadvantages..... 771
Meronits, Bohemia, weathering for garnets at.... 831
Merrall's mill 235, 296
Merrill, C. W..... 1181
Meshes, value of in screen sizes..... 1196
Metallic Extraction Company..... 103
Metallurgical tests 1167
Metal riffles, expanded 722
Metals, specific gravity of..... 1188
Meter 1187
Methods of crushing 8
feeding gravity stamps..... 207
jigs 548
preliminary crushing 9
running 5-foot pans in combination mills..... 249
running jigs 551
working amalgamating pans..... 248
Metric horse power 1188
ton 1187
Meyer and Charlton Mine, stamp mill practice in. 221
M. Hoagland Sons and Company..... 77
Miargyrite, specific gravity of..... 1189
Michell and Tregoning pulverizer.....233, 294
Michigamme iron mine.....1135, 1175
Wenstrom magnetic separator at..... 802
Microscope 1160
Middlings, treatment of..... 1121
Midvale Company 185
Milburn's crusher 111
Mile 1187
Miles, Wm. A..... 335
Mill 1.....339, 486, 498, 499, 892, 893, 1113, 1116, 1119
2.....10, 319, 339, 486, 498, 499, 522, 892, 893, 1100, 1101, 1112, 1116, 1119
3.....24, 64, 66, 87, 498, 499, 892, 902, 1091, 1100, 1101, 1116, 1119, 1129
4.....321, 363, 486, 491, 502, 895, 1116
5.....322, 339, 347, 350-352, 358, 405, 480, 486, 491, 873, 879, 895, 896, 1098, 1114, 1116
6.....341, 870, 895, 897
7.....327, 334, 341, 872, 895, 897, 1116
8.....895, 899, 1116
Mill 9....524, 528, 533, 548, 550, 552, 571, 574, 575, 587, 590, 592, 593, 606, 609, 900-902, 1116, 1126
10.....24, 26, 64, 66, 72, 76, 90, 91, 101, 347, 350, 352, 358, 359, 361, 366, 524, 528, 537, 540, 545, 547, 550, 553, 571, 575, 587, 590, 592, 593, 596, 599, 601, 603-606, 609, 863, 900-902, 906, 917, 1091, 1100, 1105, 1112, 1113, 1116, 1126, 1129
11.....362, 366, 706, 707, 900, 902, 1116
12.....24, 64, 66, 76, 90, 219, 339, 347, 350, 352, 486, 488, 491, 506, 524, 528, 540, 550-553, 577, 604, 865, 900, 903, 1091, 1100, 1103, 1105, 1111, 1116
13.....10-12, 24, 26, 47, 339-341, 362, 366, 480, 485, 488, 491, 498, 499, 515, 523, 524, 528, 529, 540, 547, 548, 551, 552, 572, 574, 576, 589, 592-594, 605, 875, 900, 904, 1091, 1099, 1100, 1114, 1116, 1119
14.....10, 339, 480, 485, 488, 491, 524, 530, 536, 540, 548, 550-552, 572, 574, 592, 593, 596, 605, 900, 905, 1091, 1116, 1119
15.....24, 26, 64, 66, 76, 87, 90, 91, 101, 347, 350, 352, 358, 359, 366, 399, 442-444, 485, 522-524, 528, 530, 533, 537, 538, 540, 550, 552, 573, 586, 590, 592, 593, 604, 605, 684, 689, 696, 862, 874, 875, 900, 906, 907, 1091, 1100, 1116, 1129, 1168
16.....24, 26, 64, 66, 69, 73, 76, 87, 90, 91, 97, 101, 347, 350, 352, 354, 358, 366, 524, 528, 534, 540, 545, 546, 549, 550, 552, 570-572, 579, 592, 593, 604, 605, 863, 893, 906, 908, 1091, 1105, 1111, 1116
17.....12, 24, 26, 64, 66, 69, 72, 76, 90, 91, 97, 101, 347, 350, 352, 354, 358, 366, 400, 480, 486, 524, 528, 534, 540, 547, 550, 552, 584, 590, 592, 593, 596, 599, 605, 863, 893, 906, 908, 1091, 1105, 1111, 1116
18.....24, 26, 64, 66, 76, 90, 101, 347, 350, 352, 358, 366, 369, 373, 410, 444, 522-525, 528, 530, 533, 537, 538, 540, 550, 552, 590, 592, 593, 604, 648, 863, 906, 909, 911, 1090, 1091, 1100, 1112, 1114, 1116, 1121, 1129
19.....24, 64, 66, 76, 347, 350, 352, 358, 427, 444, 456, 486, 489, 491, 524, 552, 590, 648, 906, 910, 1114, 1116, 1121
20....24, 26, 64, 66, 69, 70, 72, 76, 83, 90, 91, 96, 101, 347, 350, 352, 354, 355, 357, 358, 361, 366, 421, 524, 528, 537, 540, 541, 550, 551, 554, 572, 574-576, 592, 593, 604, 605, 638, 648, 663, 857, 863, 872, 873, 875, 906, 913, 1091, 1100, 1103-1105, 1112, 1116, 1129
21.....24, 26, 64, 66, 72, 76, 87, 90, 97, 101, 280, 281, 347, 350, 352, 358, 359, 361, 366, 369, 413, 451, 525, 528, 537, 538, 541, 546, 547, 550, 554, 572, 577, 592, 593, 596, 601, 603, 605, 634, 691, 696, 697, 863, 875, 906, 915, 1089, 1100, 1105, 1113, 1116, 1122
22.....20, 31, 34, 64, 66, 69, 72, 76, 87, 90, 91, 96, 97, 101, 320, 338, 339, 347, 350-352, 356, 358, 359, 361, 366, 381, 383, 399, 442, 456, 462, 523-525, 528, 533, 534, 537, 538, 541, 550, 554, 572, 573, 579, 584, 587, 592, 593, 599, 604, 605, 634, 688, 693, 697, 856, 857, 870, 872, 874, 875, 916, 917, 1100, 1102, 1103, 1105, 1112, 1116, 1122, 1129, 1140, 1141
23.....24, 64, 66, 71, 76, 87, 90, 91, 347, 349, 350, 352, 358, 359, 366, 442, 525, 528, 541, 554, 571, 592, 606, 634, 882, 916, 917, 920, 1116, 1123
24.....24, 26, 50, 51, 64, 66, 69, 72, 76, 90, 91, 101, 347, 350, 352, 355, 358, 359, 361, 366, 414, 444, 446, 456, 517, 525, 528, 529, 535, 537, 538, 541, 546, 547, 549, 550, 554, 577, 579, 584, 589, 592, 593, 604, 605, 648, 663, 664, 684, 692, 862, 870, 916, 917, 921, 1091, 1092, 1100, 1101, 1105, 1106, 1112, 1114, 1116, 1122, 1129
25.....11, 24, 26, 47, 64, 66, 69, 70, 72, 73, 76, 87, 90, 91, 97, 98, 101, 321, 347, 350, 352, 358, 359, 366, 442, 444, 451, 456, 460, 517, 525, 528, 529, 537-539, 541, 546, 547, 549, 550, 556, 571, 577, 587, 592, 593, 596, 599, 605, 607, 608, 632, 857, 863, 869, 870, 872, 874, 875, 916, 924, 1066, 1083, 1091, 1096, 1100, 1103, 1105, 1106, 1108, 1112, 1114, 1116, 1119, 1130
26.....30, 31, 35, 42, 46-48, 50, 64, 66, 68, 69, 73, 76, 87, 90, 96, 97, 101, 272, 273, 347, 350, 352, 357-359, 361, 366, 392, 393, 456, 460, 525, 528, 537, 540, 541, 546, 550, 556, 572, 574, 592, 593, 596, 604, 605, 648, 655, 663, 664, 843, 856, 861, 863, 872, 925, 926, 1091, 1100, 1103-1106, 1112, 1116

Mill 27.....24, 26, 64, 66, 69, 72, 76, 90, 94, 101, 156, 158, 164, 166, 167, 170, 177, 178, 180, 182, 185-187, 189-192, 195-199, 201, 205, 207-209, 213, 214, 219, 280, 281, 347, 350, 352, 355, 356, 358, 366, 368, 432, 444, 451, 456, 480, 486, 489, 491, 525, 528, 533, 535-538, 541, 546, 550, 556, 585, 587, 592, 593, 604-606, 638, 648, 684, 692, 768, 856, 863, 864, 872, 874, 875, 879, 890, 893, 925, 928, 1090, 1091, 1096, 1100, 1105, 1107, 1112, 1113, 1116, 1119, 1171

28.....10, 24, 26, 30, 31, 64, 67, 69, 72, 76, 90, 91, 97, 101, 104, 280, 281, 339, 340, 345, 347, 350, 353, 358, 359, 366, 381, 383, 388, 425, 432, 442, 444, 456, 461, 462, 525, 528, 535-538, 541, 546, 549, 550, 556, 574, 583, 585, 586, 592, 593, 596, 599, 604-606, 638, 684, 692-694, 856, 864, 871, 875, 925, 933, 1004, 1091, 1100, 1103-1105, 1116, 1141

29.....24, 26, 64, 76, 87, 90, 347, 350, 353, 359, 366, 525, 541, 556, 592, 593, 598, 602, 605, 684, 863, 880, 925, 926, 935, 1089, 1100, 1105, 1116, 1122

30.....10, 24, 26, 46, 64, 66, 67, 69, 72, 76, 87, 90, 91, 97, 98, 101, 339, 347, 350, 353, 358, 359, 366, 382, 383, 419, 444, 446, 449, 456, 463, 481, 486, 489, 491, 522, 523, 525, 527, 528, 530, 532, 533, 537-539, 541, 546, 547, 549, 550, 556, 572, 573, 577, 579-581, 586, 587, 592, 593, 604, 605, 638, 648, 658, 661, 684, 688, 692, 693, 695, 696, 855, 861, 863, 872, 875, 936, 937, 1089, 1100, 1105, 1109, 1112, 1113, 1116, 1141, 1164

31.....24, 26, 63, 64, 67, 69, 72, 76, 87, 90, 91, 97, 101, 104, 347, 350, 353, 358, 362, 366, 442, 444, 456, 481, 489, 491, 525, 528, 534, 535, 537, 542, 550, 558, 572, 577, 582, 587, 592, 593, 596, 604, 605, 648, 684, 692, 697, 857, 863, 872, 875, 936, 940, 1091, 1100, 1105, 1110

32.....24, 26, 64, 67, 69, 76, 87, 90, 91, 97, 101, 102, 339, 347, 351, 353, 354, 359, 366, 393, 444, 525, 528, 542, 550, 558, 572, 587, 592, 593, 604, 605, 648, 684, 697, 856, 857, 863, 875, 936, 942, 1100, 1101, 1105, 1112, 1116, 1119

33.....24, 64, 67, 76, 91, 347, 351, 353, 359, 366, 396, 442, 525, 542, 558, 572, 584, 592, 593, 605, 684, 697, 857, 936, 945, 1116

34.....46, 64, 67, 76, 87, 339, 347, 353, 359, 366, 367, 449, 456, 486, 525, 542, 545, 558, 587, 592, 593, 604, 605, 648, 684, 856, 863, 875, 936, 946, 1089, 1100, 1105, 1112, 1116

35.....46, 64, 66, 67, 69, 72, 76, 87, 90, 91, 97, 101, 337, 339, 347, 350, 351, 353, 358, 359, 361, 366, 393, 444, 458, 515, 525, 542, 546, 547, 550, 551, 558, 572, 587, 592-594, 604, 605, 648, 661-663, 684, 692, 694, 697, 856, 857, 863, 936, 947, 1089, 1100, 1105, 1116, 1123

36.....24, 64, 76, 347, 351, 353, 366, 396, 442, 525, 526, 542, 558, 572, 592, 605, 648, 684, 692, 936, 951, 1110, 1116

37.....24, 64, 67, 76, 347, 351, 353, 358, 366, 398, 486, 507, 522-524, 526, 528, 530, 531, 533, 534, 537, 538, 550, 580, 592, 648, 684, 687, 692, 694, 697, 842, 856, 863, 936, 954, 1089, 1091, 1116

38.....24, 26, 64, 67, 76, 91, 121, 126, 134, 280, 281, 339, 347, 351, 353, 354, 358, 359, 366, 382, 383, 393, 395, 444, 456, 458, 463, 517, 524, 526, 529, 542, 546, 547, 550, 558, 572, 575, 579, 587, 592, 593, 605, 638, 648, 661, 662, 684, 693, 696, 697, 843, 848, 857, 863, 872, 875, 879, 973, 974, 1085, 1087, 1089, 1095, 1098, 1102, 1105-1108, 1112, 1116, 1141

39.....24, 26, 64, 67, 69, 76, 91, 280, 281, 347, 351, 353, 358, 359, 366, 396, 403, 404, 415, 416, 444, 526, 527, 535, 537, 542, 545, 550, 562, 572, 575, 582, 592, 593, 602, 605, 607, 638, 648, 661, 662, 857, 863, 875, 973, 976, 1091, 1103-1105, 1112, 1116

40.....10, 24, 26, 48, 64, 67-69, 72, 76, 87, 90, 91, 101, 313, 339, 347, 351, 353, 356, 361, 366, 373, 395, 403, 404, 416, 444, 446, 456, 482, 483, 485, 526, 528, 543, 546, 547, 550, 562, 579, 587, 592, 593, 604, 605, 607, 638, 647, 648, 656, 663, 863, 872, 875, 879, 973, 978, 1086, 1089, 1091, 1099, 1100, 1103-1107, 1112-1114, 1116

41.....24, 26, 48, 64, 87, 347, 351, 353, 358, 366, 396, 424, 444, 451, 456, 482, 526, 543, 546, 550, 562, 572, 592, 593, 605, 647, 648, 650, 661, 663, 973, 982, 1103, 1105, 1112, 1116, 1121

Mill 42....64, 67, 72, 76, 91, 97, 101, 118, 120-123, 126-128, 134, 258, 339, 340, 345, 347, 351, 353, 366, 396, 403, 404, 444, 456, 458, 481, 486, 491, 515, 519, 526, 528, 529, 543, 551, 564, 572, 587, 592, 605, 638, 684, 696, 697, 863, 875, 984, 1085, 1098, 1102, 1105, 1112, 1116, 1121, 1130

43.....64, 67, 69, 72, 76, 91, 101, 118, 120-123, 126-128, 133, 134, 339, 347, 351, 353, 358, 366, 396, 403, 404, 444, 451, 456, 517, 526, 543, 546, 547, 551, 564, 572, 587, 592, 593, 596, C04, 605, 648, 684, 689, 692, 695-697, 843, 861, 863, 872, 875, 984, 987, 1091, 1100, 1112, 1113, 1115, 1116, 1121

44.....18, 24, 27, 54, 118, 120-123, 126-129, 131, 133-135, 257, 259, 280, 337, 339, 392, 398, 404, 449, 481, 485, 486, 489, 491, 515, 522, 526, 529, 537, 542, 564, 571, 577, 580, 582, 583, 586-589, 592-594, 596, 601, 605, 638, 681, 684, 688, 694, 695, 697, 843, 857, 861, 865, 866, 870-872, 874-876, 990, 995, 1000, 1091, 1092, 1095, 1103, 1105, 1108, 1109, 1112, 1113, 1116, 1120, 1149, 1191

45.....121-123, 126, 128, 133-135, 320, 390, 391, 448, 515, 526, 529, 537, 586, 587, 589, 592, 684, 696, 805, 870, 990, 993, 1091, 1103, 1105, 1110, 1116, 1130

46.....12, 24, 27, 118, 120-123, 126-128, 131, 133-135, 320, 337-339, 390, 391, 396-398, 403, 449, 456, 480-482, 485, 486, 489, 491, 515, 526, 537, 543, 544, 547, 566, 571, 577, 583, 586, 587, 592-594, 605, 684, 689, 696, 697, 726, 727, 843, 870, 872, 875, 990, 994, 1088, 1091, 1103, 1105, 1110, 1116, 1121

47.....12, 24, 27, 118, 121-123, 126-128, 133-135, 280, 332, 337-339, 397, 403, 449, 456, 490, 482, 485, 486, 489, 491, 515, 532, 526, 529, 537, 544, 566, 571, 572, 586, 587, 589, 592-594, 605, 684, 697, 707, 726, 727, 843, 857, 870, 872, 875, 990, 993, 1091, 1103, 1105, 1110, 1116, 1120, 1121

48.....10, 12, 24, 27, 118, 120-123, 126-131, 133-135, 320, 337-339, 397, 398, 400, 404, 449, 456, 480-482, 485, 486, 489, 491, 515, 522, 526, 529, 537, 538, 544, 547, 550, 568, 571, 572, 577, 586-588, 592-594, 596, 599, 601, 605, 684, 689, 695-697, 843, 870, 872, 875, 990, 997, 1000, 1091, 1103, 1105, 1113, 1116, 1121

49.....270, 676, 1004, 1116, 1172

50.....1004, 1005, 1073, 1116, 1126

51.....1006, 1007, 1069, 1116

52.....1006, 1008, 1009, 1011, 1013, 1116

53.....30, 31, 167, 170, 199, 202, 205, 207, 208, 212, 219, 648, 655, 659, 663, 1014, 1069, 1091, 1100, 1103, 1105, 1116

54.....27, 46, 170, 199, 205, 207, 208, 212, 219, 339, 483, 648, 663, 1014, 1015, 1110, 1116, 1121

55.....24, 145, 148, 156, 158, 164-167, 170, 177, 178, 180, 182, 186, 187, 189-192, 196-199, 201, 202, 205, 207-209, 211, 212, 219, 222, 304, 482, 485, 491, 648, 665, 701, 768, 1014, 1016, 1090, 1091, 1100, 1101, 1110, 1116

56.....145, 156, 158, 164, 165-167, 170, 174, 177, 178, 180, 182, 186, 187, 189-192, 196-199, 201, 202, 205-209, 212, 214, 219-222, 265, 734, 737, 740, 744, 745, 748, 756, 768, 770, 783, 785, 1017, 1089, 1093, 1103, 1105, 1116, 1119, 1131

57.....24, 27, 145, 153, 156, 158, 166, 167, 169, 174, 177, 179-182, 186, 187, 189-192, 196-199, 201, 202, 204, 205, 207-209, 212, 214, 219, 222, 252, 265, 339, 340, 647, 648, 650, 655, 659, 661, 663, 664, 735, 737, 740, 742, 744, 745, 748, 756, 759, 765, 768, 772, 774, 783, 1018, 1089, 1092, 1100, 1105, 1116, 1131, 1151

58.....145, 156, 158, 166, 167, 170, 172, 178, 180, 182, 186, 187, 189-192, 195-199, 201, 202, 205, 207-209, 212, 214, 219, 222, 229, 252, 454, 648, 650, 655, 661, 663, 737, 744, 745, 748, 756, 772, 774, 1018, 1019, 1089, 1100, 1103, 1105, 1114

59.....24, 27, 145, 156, 158, 166, 167, 169, 174, 177-180, 182, 186, 187, 189-192, 196-199, 201, 202, 205-209, 212, 214, 219, 222, 229, 240, 482, 647, 648, 655, 659, 663, 664, 737, 744, 745, 748, 756, 759, 765, 772, 785, 1018, 1020, 1083, 1089, 1100, 1103, 1104, 1109, 1116, 1122

60.....32, 46, 145, 156, 167, 169, 180, 182, 199, 201, 205, 207, 208, 212, 214, 219, 222, 648, 650, 661, 737, 740, 742, 744, 748, 1018, 1021, 1089, 1105

Mill 61.....23, 46, 145, 156, 158, 164-167, 169, 174, 175, 177, 179, 180, 182, 185-187, 189-192, 196-199, 201, 202, 205, 207-209, 212-214, 219, 222, 266, 338-340, 648, 659, 661, 663, 664, 737, 740, 746, 748, 756, 765, 768, 783, 785, 848, 858, 860, 861, 875, 1018, 1021, 1030, 1089, 1090, 1100, 1103, 1105, 1116, 1132
62.....24, 27, 48, 145, 155, 156, 158, 165-167, 169, 177-182, 185-187, 189-192, 197-199, 201, 202, 205, 207-209, 212, 214, 219, 222, 265, 339, 340, 648, 659, 661, 703, 733, 737, 741, 742, 748, 750, 756, 757, 765, 768, 772, 783, 1018, 1023, 1089, 1100, 1103, 1105, 1116
63.....24, 167, 170, 177, 178, 182, 190, 191, 199, 201, 205, 207, 208, 212, 214, 219, 648, 737, 756, 772, 1018, 1023, 1089, 1116
64.....24, 27, 48, 145, 153, 155, 156, 158, 164-167, 169, 174, 176, 177-180, 182, 185-192, 196-199, 201, 202, 205-209, 212-214, 219, 222, 339, 340, 648, 659, 663, 733, 737, 740, 742, 745, 756, 768, 772, 773, 864, 1018, 1023, 1089, 1100, 1103, 1105, 1116, 1132
65.....24, 156, 158, 166, 169, 174, 177, 178, 180-182, 185, 187, 189-191, 196-199, 201, 202, 207-209, 212, 214, 219, 222, 238, 265, 338, 339, 482, 491, 647, 648, 659, 661, 733, 735, 737, 738, 740, 741, 743, 744, 746-748, 750, 754, 756, 772, 773, 782, 1018, 1024, 1039, 1089, 1092, 1103, 1104, 1116, 1132, 1168
66.....46, 47, 156, 166, 167, 169, 177, 180-182, 186, 187, 189-192, 197-200, 202, 205, 207, 212, 214, 219, 222, 253, 682, 735, 738, 741, 744, 745, 747, 753, 756, 760, 768, 773, 775, 781, 785, 1018, 1025, 1068, 1091, 1098, 1100, 1102, 1105, 1116, 1132, 1133
67.....28, 145, 152, 153, 156, 158, 166, 167, 169, 174, 175, 177-182, 184-187, 189-192, 194-199, 201, 202, 204, 205, 207-210, 212, 214, 219, 222, 482, 733, 735, 738, 740-742, 744, 746, 747, 752, 756, 759, 765, 768, 771, 773-775, 782, 785, 872, 1018, 1026, 1030, 1091, 1100, 1103, 1105, 1106, 1116, 1133
68.....24, 27, 145, 156, 158, 164, 166, 167, 170, 174, 177, 178, 180, 182, 185-187, 189-192, 196-199, 201, 202, 205-209, 212, 214, 219, 222, 252, 303, 339, 340, 482, 648, 659, 661, 664, 733, 735, 738, 741, 744-746, 748, 755, 756, 783, 785, 1018, 1027, 1028, 1040, 1091, 1100, 1103, 1104, 1111, 1114, 1116, 1133, 1134
69.....158, 173, 175, 184, 212, 214, 648, 735, 745, 762, 783, 785, 1018, 1028-1030, 1089, 1091, 1100, 1105, 1116, 1133
70.....167, 169, 178, 179, 182, 199, 202, 205, 207, 208, 219, 586, 682, 738, 742, 744, 773, 1018, 1029, 1047, 1089, 1116
71.....145, 156, 167, 170, 174, 177, 178, 182, 187, 189-191, 196-199, 201, 205, 207-209, 212, 214, 219, 222, 265, 418, 648, 660-662, 665-667, 733, 740, 743-745, 748, 772, 773, 780, 1029-1031, 1037, 1089, 1092, 1116
72.....24, 156, 158, 166, 167, 169, 174, 178, 179, 182, 187, 189, 191, 192, 196-199, 201, 202, 205-209, 212, 214, 219, 222, 265, 320, 339, 448, 456, 648, 661, 676, 683, 738, 741, 743, 744, 747, 756, 772, 773, 777, 782, 856, 1030, 1032, 1037, 1038, 1089, 1100, 1116, 1133
73.....24, 145, 156, 158, 166, 167, 169, 173, 174, 176-182, 184-187, 189-192, 196-203, 205, 207-209, 212, 214, 219, 222, 238, 265, 338, 339, 456, 483, 485, 491, 647, 648, 659, 733, 735, 738, 740, 741, 743, 744, 746-748, 750, 754, 756-758, 765, 772, 773, 775, 781, 782, 1024, 1030, 1032, 1034, 1038, 1089, 1092, 1100, 1101, 1103, 1116, 1132, 1168
74.....24, 145, 156, 158, 166, 167, 169, 174, 177-183, 185, 187, 189-191, 196-199, 201, 202, 205, 207-209, 212, 214, 219, 222, 238, 265, 338, 339, 482, 485, 491, 647, 648, 650, 652, 659, 661, 733, 735, 738-741, 743, 744, 746-748, 750, 754, 756, 783, 1024, 1030, 1034, 1038, 1089, 1092, 1100, 1101, 1103, 1117, 1132, 1168
75.....145, 156, 158, 166, 167, 170, 178, 182, 186, 187, 189-192, 196-199, 201, 202, 205, 208, 209, 211, 212, 214, 219, 222, 339, 648, 659, 663, 664, 700, 701, 703, 738, 744, 756, 772, 870, 1030, 1034, 1089, 1090, 1103, 1105, 1117
Mill 76.....145, 156, 158, 166, 167, 169, 177, 179, 180, 182, 186, 187, 189, 190-192, 196, 198, 199, 201, 202, 205, 207-209, 212, 214, 219, 265, 648, 664, 703, 738, 740, 743, 750, 765, 772, 879, 1030, 1035, 1089, 1105, 1117
77.....10, 145, 148, 156, 158, 164, 166, 167, 169, 174, 177-182, 185-187, 189-192, 195-199, 201, 202, 204-209, 211, 212, 214, 219, 220, 222, 242, 482, 680-682, 703, 739, 741, 747, 753, 756, 757, 761-763, 765, 766, 768, 774, 842, 1030, 1035, 1046, 1047, 1089, 1091, 1100, 1105, 1117, 1133
78.....418, 444, 446, 648, 653, 655, 658, 660, 661, 665-667, 700, 702, 703, 857, 874, 1017, 1029-1031, 1035, 1037, 1038, 1089, 1090, 1100, 1101, 1117, 1126
79.....456, 643, 655, 658, 700, 701, 703, 723, 875, 1030, 1032, 1033, 1037, 1038, 1100, 1117
80.....456, 700-703, 875, 1029, 1030, 1033, 1038, 1039, 1100, 1101, 1117
81.....238, 1030, 1038, 1039, 1089, 1100, 1117
82.....24, 27, 145, 156, 158, 164, 166, 167, 170, 174, 178, 180, 182, 185-187, 189-192, 196-199, 201, 202, 205-209, 212, 214, 219, 222, 244, 248-250, 252, 339, 456, 458, 480, 486, 491, 648, 659, 661, 663, 664, 723, 733, 735, 739, 748, 755, 756, 760, 761, 763, 765, 766, 768, 777, 780, 785, 863, 1027, 1028, 1039, 1040, 1091, 1100, 1101, 1103, 1104, 1111, 1114, 1117, 1134
83.....46, 47, 145, 156, 167, 170, 174, 178, 183, 185-187, 189-192, 196, 197, 199, 201, 202, 205-208, 212, 214, 219, 244, 246, 248, 249, 252, 456, 458, 460, 482, 648, 663, 777, 778, 780, 783, 1039-1041, 1091, 1095, 1100, 1101, 1103-1106, 1110, 1117
84.....24, 27, 42, 46, 145, 156, 158, 166, 167, 170, 174, 177, 178, 180, 181, 183, 185-187, 189-192, 196-199, 201, 202, 205-209, 212, 214, 219, 222, 244, 246, 248, 249, 252, 339, 347, 351, 353, 354, 356, 359, 366, 456, 458, 460, 648, 663, 739, 742, 743, 748, 756, 763, 772, 777, 780, 783, 785, 860, 861, 875, 1039, 1040, 1045, 1085, 1089, 1091, 1095, 1100, 1101, 1103-1106, 1109, 1110, 1117, 1134
85.....24, 65, 67, 76, 167, 169, 178, 179, 199, 202, 205, 207, 208, 219, 220, 351, 353, 411, 442, 451, 526, 528, 568, 586, 592, 682, 739, 742, 773, 1029, 1046, 1047, 1089, 1117
86.....24, 27, 65, 67, 72, 76, 87, 90, 101, 168, 169, 174, 280, 281, 342, 347, 351, 353, 354, 366, 410, 419, 526, 528, 544, 545, 550, 568, 572, 587, 588, 592, 593, 604, 605, 648, 682, 684, 696-698, 703, 735, 737, 739, 748, 756, 774, 785, 848, 857, 863, 872, 879, 883, 1046-1048, 1091, 1100, 1105, 1117, 1122
87.....24, 27, 49, 65, 67, 72, 76, 87, 90, 101, 145, 156, 158, 166, 167, 170, 178, 180, 183, 185-187, 189, 191, 192, 196, 199, 202, 205, 207-209, 212, 219, 347, 351, 353, 358, 359, 413, 427, 450, 451, 526, 528, 537, 544, 568, 586, 592, 593, 648, 739, 742, 768, 848, 856, 863, 872, 1046, 1060, 1089, 1092, 1112, 1117
88.....24, 27, 65, 67, 76, 87, 90, 101, 145, 156, 158, 166, 167, 169, 178, 180, 183, 189, 191, 192, 197-199, 201, 205, 207, 208, 212, 214, 219, 347, 351, 353, 358, 359, 414, 450, 451, 526-528, 537, 544, 550, 568, 592, 593, 605, 648, 682, 739, 742, 773, 872, 1030, 1046, 1052, 1089, 1105, 1112, 1117
89.....21, 24, 27, 45, 46, 65, 67, 77, 87, 90, 91, 101, 347, 351, 353, 362, 366, 790, 798, 863, 880, 883, 1053, 1055, 1117
90.....23, 24, 27, 30, 31, 65, 67, 77, 87, 90, 101, 302, 347, 351, 353, 803, 861, 863, 1053, 1055, 1091, 1100, 1117
91.....65, 101, 106, 107, 310, 340, 790, 810, 813, 816, 843, 856, 858, 861, 863, 864, 881, 883, 883, 1053, 1054, 1056, 1091-1094, 1096, 1098, 1100, 1108, 1112, 1114, 1117, 1135
92.....24, 27, 65, 67, 77, 90, 101, 304, 338, 339, 341, 347, 351, 353, 366, 451, 486, 489, 491, 522, 527, 528, 544, 550, 570, 592, 593, 605, 790, 805, 807, 814, 843, 860, 862-864, 880, 882, 883, 891, 1060, 1063, 1088, 1091, 1094, 1112, 1113, 1117, 1135
93.....24, 27, 65, 67, 69, 87, 90, 347, 351, 353, 354, 366, 790, 800, 814, 895, 1060, 1065, 1117
94.....96, 103, 104, 309, 346, 848, 856, 861, 880, 882, 883, 1070, 1091, 1094, 1096, 1190
Mill data on spindle breakers..... 46
distributors 857
Millerite, specific gravity of..... 1189

Miller, Robert 385
Milligram 1187
Millimeter 1187
Milling, bibliography for 1173
  cost of 1126
Mill processes and management 888
Mills, arrangement of machines in 1107
  care of 1114
  construction of 1088
  cost of erecting 1124
Mill site 1085
Mills, location of 1085
  power in 1089
Mill testing 1168
  work, tests of 231
Milwaukee Mining Company 940
Mimetite, specific gravity of 1139
Mine 1 482
  12 ..... 481, 482
  24 ..... 481, 482
  25 482
  26 ..... 481, 482
  30 ..... 481, 482
  31 ..... 481, 482
  35 ..... 481, 482
  38 481
  29 482
  42 481
  44 12
  46 ..... 12, 843
  47 12
  54 481
  57 482
  59 482
  67 483
  77 482
  83 481
  87 ..... 481, 482
  93 481
Mine la Motte 921
Mineral aggregation, effect of in dressing ores .. 3
  examination 1162
Minerals, occurrence of 3
  specific gravity of 1138
Miners' inch measure 1197
Mining, cost of 1126
  wire cloth 1196
Minnesota Iron Company, cost of crushing at plant of 51
  mine 60
  breaker 23
Minnie and A. Y. Mill 900
Miscellaneous apparatus 883
  machines using agitation 682
  plates 741
  processes of separation 790
Missouri galena-blende, sizing tests on 303
  lead and zinc mills, method of jigging in 571
  limestone, jaw plates used in crushing 48
  zinc region, hand picking in 893
Modification of Collom jig 515
  the Evans jig 517
  the Frue vanner 651
Moisture in ore 1106
  samples 846
Molybdenite, specific gravity of 1139
Molybdenum, atomic weight of 1138
Momentum and trajectory 889
  effect of in dressing ores 4
Monarch breaker 20
  table of sizes of 21
  magnetic separator 797
Monitor hydraulic giant 333
Mons plant 895
Montana Iron Works 76
  Mining Company 1027, 1040, 1131
Monte Cristo Mine, capacity of Huntington mill in 231
Monteponi magnetic mill 1117
  Sardinia, capacity, etc., of jigs in mill at 597
  Ferraris jig at 584
  magnetic separator used at 799
  table used at 698
  jigs used at 523
  magnetic separator used at 810
  mill at 1060, 1066
  removal of tailings at 587
  roasting spathic iron ore at 815
  screens used at 343
  sieve frame used at 540
Monteponi, Sardinia, stay boxes used at 585
  tail discharge at 579
  zinc mill 1117
Moonta mines (Australia), Hancock vanning jig used at 505
Morel and Hall's ball mill 234, 235
Morey and Sperry pulverizer 234, 235
Morgan, P. G. 1181
Morison, D. B. 143, 215, 219, 229
Morison's curves of velocity of stamps 215
  high speed stamp 141
Morning mill 223, 1179
  Mining Company 946
  Star Cement Gravel Mine Mill, sizing test in .. 211
Morro Velho mine, height of discharge 213
Morse, W. S. 234, 235, 1175
  F. B. 234, 647
Mortar and screens for stamps 119
  block of stamp battery 145
  covers 167
  housing linings for Ball stamp, table of 130
  in stamp mills, placing 148
  linings 166
Mortars 161
  table of dimensions of 165
  weights of 164
  the Dahlonega 153
Mosler, C. 143, 230, 643, 1138
Motte's breaker 58
Mouchet, Ch. 110, 477, 641, 1173
  on length and number of strokes in jigs 594
Mount Bischof tin mines 235
Mounting Blake Breaker, instructions for 12
Mouth of spindle and jaw breakers 54
  or feed openings of gravity stamps 166
Movable sieve hand jigs 496
  method of working 497
  table of practice in the mills 498
  jigs 496
  power jigs, Bilharz oblong 502
  Bradford eccentric 500
  Conkling 503
  Hancock vanning 504
  Hooper vanning 505
  intermittent 506
  Robinson 504
  Schranz 502
Movements on Blake breaker made by Farrel Foundry and Machine Company 34
  Gates Iron Works 34
  Dodge breaker made by Gates Iron Works .. 34
  Parke and Lacy Company 34
Moxham, E. C. 1139
Moyer Mill 910
Mud sills for stamp mills 152
Muller of amalgamating pan 345
Mumford and Moodie's separator 813
"Mundic," definition of 900
Mundt 162
Mundt's screens, table of dimensions of 163
Münich, tests on strength of stone at 302
Munroe, density of pulp on slime tables 636
Munroe, H. S. 57, 224, 226, 401, 476, 640, 723, 1174, 1175
  figures on practice with Lake Superior hydraulic classifiers 394
  laboratory slime table 1155
  on capacity of slime tables 637
  sizing tests of tailings in Mill 25 636
  tests in free and hindered settling 636
Munts metal plates coated with mercury 758
  method of coating with quicksilver 754
Muscovite, specific gravity of 1139

N

Nagle 97
Naphtha, specific gravity of 1138
Narod pulverizer 235, 262, 297
Navaho mines 1222
Nederland mill, wear of shoes and dies in 249
Needles for screens, sizes of 173
Neill, James W., tests for roasting on Anchor mill ore 815
Neodymium, atomic weight of 1138
Neon, atomic weight of 1138
Neubert, E. W. 482, 1174
Neue Helene mill 1037
Neuerberg mill 910
  bibliography for 922

Neuerberg rolls 110
system of screening 364
trommel 385
New Blanton cam 194
Bulfontein Diamond Company..... 1081
Century drop motion jig, cam and spring in. 527
Comet, stamp mill practice at..... 221
Newcum, W. A..... 223
New Elkhorn mill..... 1134
Newell and Newell.....229, 789
S. V. 220
Newfoundland, chromite mill in..... 475
New Himmelfahrt mill..... 958
Jersey and Pennsylvania Concentrating Company 1056
Jersey bluestone rock, treated in Frisbee Lucop mill 267
Iron Mining Company 1056
plate error 747
Primrose Mine, stamp mill practice in..... 221
Smuggler concentrator 1004
Newton gold mill 1029
jigging mill 1047
mill 227
dimensions of mortars in..... 165
rate of crushing in..... 165
shoe and die used in..... 181
mortar 227
New York Mill, life of screens in..... 173
Niagara crusher and pulverizer.....233, 294
sizing test of 375
Falls, water wheels at..... 1090
Niccolite, specific gravity of..... 1189
Nicholas pulverizer 233, 292
Nichols Chemical Company..... 905
Nicholson, Frank 1183
Nickel, atomic weight of..... 1188
specific gravity of..... 1189
Niobium, atomic weight of..... 1188
Nip, angle of 89
Nitrogen, atomic weight of..... 1188
Nitze, H. B. C.....224, 787, 833, 835
Norbom concentrator 653
North Carolina, separation of corundum in..... 9
Star Mill 145, 224, 1175, 1182
dies used in..... 180
dimensions of mortars in..... 165
mouth of mortar in..... 167
rate of crushing in..... 165
wear of shoes and dies..... 183
Star Mining Company..... 1018
Star on Sultan Mill..... 1050
Number of drops and height of drop..... 214
of Tremain stamp..... 138
jaw compared with spindle breakers..... 51
sieve compartments in a jig..... 588
strokes in jigs 592

O

Oberegger gyrating screens 386
Ocean water, specific gravity of..... 3
Odell roller mill 111
Ogle, J. P..... 59
Oil, testing by 1155
used in Elmore process of adhesion..... 831
Olcott, E. E.....226, 1134
Old Bed Magnetic Concentrating Mill, No. 1..... 1059
Buchanan breaker, table of movements of.... 23
Oldham Mill 220, 228, 1133
chuck blocks in 177, 178
details of plate screens in..... 169
dies used in 180
dimensions of mortars in..... 165
distribution of amalgam in..... 765
Golden Gate concentrator used at..... 681
rate of crushing in..... 165
shoe shanks and butts in..... 181
sockets in bosses in..... 187
wear of stamp shoes and dies..... 183
Old Jordan and Galena Mining Company..... 913
Old Star of the East Mill, Australia, mercury wells in 769
gold caught in wells in..... 771
Oligoclase, specific gravity of..... 1189
Olsen vertical testing machine 311
Ontario mill 290, 1134, 1174
tests with varying sizes of screens..... 210
Opal, specific gravity of..... 1189
Opening, percentage of, in screens..... 546
Operation and adjustment of Blake breaker..... 16
of circular slime tables..... 693
slime tables 684
vanners..... 657
Oppermann, M. 641, 1176
Order of drop, in gravity stamps..... 214
Ore concentrator, the Charleton..... 427
dressing, definition of..... 1
divisions 5
Granulating Mill, Cummings 255
kind of, in gravity stamps..... 207
weighing 532
Oriental mill, mercury wells in..... 769
yield of mercury wells in..... 771
Oro Fina Mine, efficiency of stamp blow in..... 220
Plata Mine, sizing tests of ore from..... 309
Orpiment, specific gravity of..... 1189
Orthoclase, specific gravity of..... 1189
Osceola Consolidated Mining Company.....994, 1181
Mill 131, 1182
capacity of slime tables in..... 697
Osmium, atomic weight of..... 1188
Osterspey, classifier invented by..... 421
discharge 582
pulsion jig 538
siphon separator 478
Ottawa Gold Mining and Milling Company..... 1157
gyrating vanner used by..... 657
shaking plates in..... 741
Ounce, avoirdupois 1187
troy 1187
Outside amalgamated plates..... 731
fastening the plates to the tables..... 735
position of in the mills..... 737
principle of action..... 731
tables for supporting..... 732
total areas in mills..... 744
Overflow battery 214
Overhead crab 199
Overstrom table 679
Owen, Frank 1182
Owyhee mill 223
height of drop in..... 218
repairing stamp stem in..... 188
Oxygen, atomic weight of..... 1188
Ozocerite, specific gravity of 1189

P

Paddock air jig 820
assay of products of..... 822
Pahang Corporation 1084
Palladium, atomic weight of..... 1188
specific gravity of 1189
Pallausch, A..... 1177
Pan amalgamation for silver 1157
cost of..... 250
bottom of amalgamating pans 241
Pandora mill of the Smuggler-Union Mining Company 1016
Panning, dry 825
Pan or plate conveyors..... 860
Pape-Henneberg dry separators.....818, 828, 890, 891
Parabolic formula, Rittinger's..... 471
Wagoner's 472
Parallelism of rolls 71
Parent 837
Lucien 385
Parke and Lacy Company.....22, 28, 30, 34, 416
Parker, R. A..... 229
Parkhurst and Whipple 234
Parkin, C..... 142
Parkyn, T..... 1184
Parlow, P. G..... 220
Parrot Mill, Butte, Montana, tests of Wilfley table 675
Silver and Copper Mining Company..... 982
Parsons and Fisher jig..... 517
advantages of 518
construction of 525
disadvantages of 518
hydraulic water in 537
sizes of sieves and plungers in mills..... 529
Parsons, bumping tables, used by..... 668
distributor 857
table, details of in Mill 25..... 682
Pasley, C. S..... 1183
Patterson Elephant ore stamp 141, 142
Patton pan 291
Paul, A. B.....228, 1184

Paul's arrastra 290
ball mill 293
Paxman mill 283, 297
Payne magnetic separator 799
Peace River Phosphate Company 897
Peak Hill mine, acid water in 751
retort residue at 783
Pearce, S. H. 884
data on sampling 849, 851
Pearl (Australia) Mill, wear of shoes and dies in .. 183
Peck centrifugal separators 823
Pein, A. von 113
Pelton wheels 1089
Penn Mill 229
efficiency of stamp blow in 230
Percentage of opening in jig screens 546
in screens 369
with holes in 60° and 90° rows 163
Percussion tables, bibliography of 727
Percy, C. M. 385, 492
Perforated plate and wire cloth screens, for medium and fine work 340
Periods of clean up in steam stamps 134
Periphery speed of rolls 86
Permeability of annealed wrought iron 792
gray cast-iron 792
Perm works, double discharge in 584
Pernolet 101
A. 293, 641
V. 477, 641, 837
Peters, E. D., Jr. 11, 51, 56, 57, 59, 109, 335
Pfeiffer, J. 295
Pfeiffer's horizontal ball mill 234, 296
Pfordte, O. F. 295, 723, 1180
Pheby, F. S. 158, 223
Phelps breaker 59
Philadelphia and Reading Coal and Iron Company 342
Graphite Company 1075
Phillips 213, 1035, 1135
J. A. 109, 223, 290, 787, 839, 1174
W. B. 833, 835, 836, 1175, 1176, 1180
tests on roasting hematite ores 814
Phlogophite, specific gravity of 1139
Phoenix atmospheric stamp 140
mill 143
dimensions of mortars in 165
false bottom in 180
rate of crushing in 165
screens used in 175
Phonolite and andesitic breccia crushed at Florence, Colorado 108
Phosphate 895
dressing in Florida 895
plant in Belgium 899
Phosphor bronze cloth screens 174
plate screens 174
Phosphorus, atomic weight of 1133
Physical properties of minerals in ore dressing 3
adhesion 4
change of magnetism by heat 4
change of porosity by heat 4
color and luster 3
decrepitation 5
greasiness 4
hardness 2
magnetism 4
mineral aggregation 3
specific gravity 3
structure and fracture 3
tenacity and brittleness 3
Picking chutes 489
hand 889
houses 492
in the mine 481
block system 481
rich ore for economy 481
waste for stowing 481
tables 488, 492
Bartlett 489
comparison of movable and stationary 491
Pickling of copper plates 754
Pictou, H. 1178
Pierce, W. I. 1174
Pierrefitte mine, magnetic separation used in 798
Pillow blocks and their alignment 71
Pinite, specific gravity of 1139
Pipe discharge in jigs 583
sampler 845
steam, for amalgamating pans 243
Pirchl, J. 478
Pitkaranta, Finland, Dellvik-Gröndal separator at 804
Pittsburg Foundry and Machine Company 76
Monarch breaker at 21
Placing the mortar in stamp mills 149
screen in gravity stamps 170
Plain copper plates coated with amalgam 747
quicksilver 747
comparison of, with silver plated plates. 748
transverse troughs or riffles 773
Plaminek, A. 837, 838
Planet pulverizing mill 234, 294
Plate amalgam, ratio of gold to silver in 764
amalgamation 800
gauges 1194
Plates, acid water on 751
amalgamating new 752
apron 740
arrangement of 742
back, disadvantages of 178
comparison of plain copper and silver plated .. 748
Plate screens 167
table of details of 169
Plates, details of methods of dressing and cleaning plates 757
dimensions, area, and thickness of 744
distributors and collectors on 743
dressing of 756
electric current on 753
graphite coating on 751
grease on 751
inside amalgamated 178
lip 739
maintaining, of right consistency 756
miscellaneous 741
Munts metal, coated with mercury 759
of pure silver coated with amalgam 750
outside amalgamated 731
removal of amalgam from 757
shaking 740
sickening and flouring of mercury on 751
slope of 744
sluice 749
sodium amalgam on 753
speed of waves on 746
splash 739
staining of 750
sulphuric acid used on 752
swinging 743
treatment of 750
Platform elevators 864
Platforms for gravity stamps 156
Platiniridium, specific gravity of 1139
Platinum, atomic weight of 1133
specific gravity of 1139
Plungers and sieves, sizes of, in mills 533, 539
attachment of to the connecting rods 539
clearance of 539
connecting rods for, in jigs 539
in jigs 533
Pneumatic and spring stamps 112, 139
belt concentrator 813
products of 813
concentration 815
bibliography for 837
concentrator, Hooper 830
jigs, Krom's 834
pulverizer 236
bibliography for 298
stamps 234
bibliography for 149
Krause's 141
Poech, F. J. 832
Pointed boxes 475–477
Rittinger's 439
Linkenbach's 441
Polybasite, specific gravity of 1139
Porosity, change of, by heat 4
roasting for 823, 890
Porphyry, weight of 1130
Porter, J. A. 1176
S. R. 1194
Port Henry magnetite 109
capacity of Sturtevant mill for 288
Mine, products of Ball-Norton separator in ... 796
Position of plates in the mills 737
Postlethwaite, R. H. 1194
Posts for gravity stamps 153
Potassium, atomic weight of 1133
Pound, avoirdupois 1197

Pound, of water 1187
per square inch 1188
troy 1187
Powell, F. 1181
Power and efficiency of stamps 131
Power and surface measurements in stone crushing by Von Reytt 306
cost of, in pan amalgamation 250
for amalgamating pans 249
a three-disc Heberli mill 260
crushing 315
rough rules for 309
Fraser and Chalmers rolls 97
gravity stamps 204
Huntington Mill 280
jigs in mills, table 596, 597
steam stamps, table of 131
vanners 663
jigs, Bilhars circular sieve 504
continuous movable sieve 499
Hancock vanning 504
Hooper vanning 505
intermittent movable sieve 506
Robinson movable sieve 504
Schranz 503
of jaw and spindle breakers 52
required for trommels 357
table of measurements of 1188
used by rolls 97
for jigging 602
friction of piston on water 603
on jig walls 602
inertia of starting 603
mechanical friction 603
oscillatory action 603
work of drawing the returning water down 602
lifting sand 602
in crushing rock, effect of strength and specific gravity on 313
in mills 1089
Practical limits of settling in settling tanks 455
Praseodymium, atomic weight of 1188
Prehnite, specific gravity of 1189
Preliminary crushing 9
bibliography for 55
blasting in the mine 9
breaking by hammers 9
calcining for friability with or without quenching by water 9
methods of 9
machines 318
washers 319
washing, bibliography of 334
Prentiss, G. W. 173, 1194, 1195
Pressure machines, compared with grinding 313
of springs on rolls 73
table of measurements of 1188
Preston, E. B. 58, 225, 228, 290, 291, 294, 295 297, 477, 783, 1178
figures on power for vanners 663
on connecting table with mortar 735
shaking plates 741
traps 774
slope of plates 745
tables for supporting plates 733
Primosigh, E. 836
Principle of action of gravity stamps 144
jaw and spindle breakers 52
outside amalgamated plates 731
vanner separation 665
Principles and purpose of rolls 62
of sampling 849
screen sizing 365
bibliography for 384
Prisms 361
Prister, A. 1178
Prize mill, life of screens in 173
Processes of separation, miscellaneous 790
Products of spindle and jaw breakers 53
breakers, table of sizing tests of 45
Progressive pulverizer 236, 299
Properties of mercury 730
Propfe mill 235, 297
Proportions between weights of parts of a stamp .. 189
of stamps 190
Proustite, specific gravity of 1189
Providence mill, shoe shanks and butts 181
wear of shoes and dies in 183
Provis, Richard 1182
Prus, G. 835, 1182
Prussian mine, Colorado, Clarkson-Stanfield centrifugal separator at 830
Przibram, automatic feeder used at 549
Bohemia 492, 1089
capacity, etc., of jigs in mill at 597
center discharge at 582
movable sieve jig at 499
ore, products of jaw breaker on 47
Von Reytt's tests on 305
work necessary for crushing one kilo of different sizes of 308
pointed boxes used at 478
power for jigs at 602
removal of tailings at 588
Salzburg table used at 683
separation by roasting at 815
sieve frame used at 540
sizes of ore hand picked at 487
slope of jig sieves at 548
Psilomelane, specific gravity of 1189
Pulleys in gravity stamps 128, 197
jigs 532
Pulp, bed of, on the belt in vanners 660
current in amalgamating pans 246
on slime tables, density of 695
Pulsating screens 342
Pulsion and suction investigated in the mills 622
jigs, definition of 558
jig tests of hindered settling 623
with little suction 628
much suction 628
no suction 628
Pulverizer, Bartle 294
Cunnack's 293
Cyclone 288
bibliography for 298
Dodge, improved 262
Griffin 299
Howland, No. 1, bibliography for 297
Jordan's 299
Leviathan 299
Meihe's 299
Merrall's, bibliography for 296
Michell and Tregoning 294
Morey and Sperry 295
Narod 282, 297
Nicholas, bibliography for 292
Pneumatic, bibliography for 299
Progressive 299
Ryerson 299
Pulverizers, bibliography for 289
classification of 231
other than gravity stamps 231
purpose of 231
Pulverizer, Thompson's, bibliography for 294
Tregoning 297
Walker 299
Whelpley and Storer 289, 299
Pulverizing mill, Tustin's rotating 262
Pumps for sand and water 868
water supply 871
Punched plate screens 335
compared with wire cloth 171, 354
Punching screens 223
Purification of mercury 785
Purpose and adjustment of jigs 552
essential qualities of classifiers 289
of pulverizers 231
rolls 62
power and capacity of Huntington mill 280
Purtscher, E. 1185
Putting on new shoes 201
Pyramids, for trommels 361
Pyrargyrite, specific gravity of 1189
Pyrite, angle of nip required to crush 94
crushed in Mill 13 47
specific gravity of 1189
weight of 1190
with quartz and porphyry, crushing in Mill 20. 95
Pyrolusite, specific gravity of 1189
Pyromorphite, specific gravity of 1189
Pyroxene, specific gravity of 1189
Pyrrhotite, specific gravity of 1189

Q

Quaker mine, capacity of Huntington Mill in 281
Quality of copper for plates 747
crushing by breakers 47
rolls 88

Quality of feed of vanners..... 658
work of classifiers..... 461
Quantities of water in rectangular launders..... 878
vanners 659
Quantity crushed by rolls 100
of hydraulic water in jigs..... 598
water on circular slime tables..... 694
Quart 1187
Quartering 844
Quarts, angle of nip required to crush..... 94
film-sizing tests on..... 707
in Banner mine..... 148
Quartzite, picked from gold in rock houses in the Rand, South Africa 482
Quartz mill, Bryan roller..... 271
ore, capacity of Tremain stamp for..... 138
pyrite ore, treated by Summit Mining and Smelting Company 674
separating chalcopyrite or blende from..... 720
separation from gold by amalgamated copper plate 4
specific gravity of 3, 1189
treated by Dodge improved pulverizer..... 262
in Mill 4 502
weight of 1190
Queen and Company 1159
Mary Colliery, Lannisdorf, centrifugal machine separating coal at 830
Quehant, Ch. 1185
Quicksilver ore, dressed at Idria, Austria..... 481
ores, the dressing of..... 1074
Quincy granite, result of crushing..... 33
mill 230
Mining Company 998, 1181

R

Raborg, W. A. 1186
Radium, atomic weight of..... 1188
Raff wheels.. 864
Railway Master Mechanics' Association..... 173
Ramsbeck 1102
hand picking at..... 492
mill 1086
products of Luhrig table at..... 670
sizes of ore hand picked at..... 487
Ramsey sludge tank 446
Randolph, J. C. F.....57, 109, 223, 385, 476, 640, 1174
mill, life of screens in..... 172
on length and number of strokes in jigs..... 594
Rand, South Africa 492
circular picking tables used at..... 491
tailings wheels on the..... 865
Ranges of sizes fed to a single jig..... 606
Rapid City chlorination works..... 354
Rasch 293
Rate of travel of the ore in trommels..... 374
Ratio between screens, single or multiple..... 368
total horse power and that to overcome gravity in gravity stamps..... 205
of diameter of hole in trommel to space between the rolls 95
Ratios of settling, definition of..... 4
weights of stamps and mortars..... 164
Rauft, T..... 297
Raymond Automatic Pulverizer 236
R. W...57, 223, 229, 230, 291, 426, 834, 839, 884, 1175
Realgar, specific gravity of..... 1189
Reardon, Ph. 643, 1184
Receiving cones for trommels, table of..... 358
floors 842
Rectangular buddle 706
Reed, S. A. 884
Reese River process of amalgamation.....248, 1039
Regular mill testing 1168
Regulators, water 858
Reichenecker, A.....224, 229, 788, 1177
Reifsnyder 884
Relation of speed of current to size of grain in settling tanks 452
to angle of nip of rolls..... 94
Relative proportion of gold and silver in daily amalgam as compared with hard amalgam..... 762
on successive plates..... 763
Reliance rolls 111
self-tightening cam 229
Removal of coarse concentrates in jigs..... 576
by skimming the sieves..... 576
pick-points, etc 882
tailings 587
Repairs, cost of in vanners..... 663
on rolls, cost of, for other than wearing parts. 104
Republic Gold Mine..... 1176
Resetting tappets..... 201
Results of the tubular classifier tests..... 613
Von Reytt's power and surface measurements 306
Retorting amalgam 781
loss in weight by 783
Retorts 781
Revenue Tunnel Mill 931
Mines Company 922
Revolution of circular slime table, speed of..... 696
Revolutions and periphery speed of rolls..... 87
required for varying periphery speeds, table of 88
Revolving circular cancave slime tables..... 692
convex slime tables 686
Clark table 689
devices used on 689
Evans table 689
Schrans table 690
table 690
"Revolving knife buddle," Ball's.....328, 334
screens, cones, pyramids, prisms..... 361
or trommels 346
strakes 725
Reynolds Mill, Georgia, ratio of gold to silver in plate amalgam in 764
Reytt, C. von.....335, 729, 1185
K. von.....60, 110, 112, 205, 229, 296, 477, 1177, 1185
Rheinpreussen Colliery at Homberg..... 816
Rhodium, atomic weight of..... 1188
Rhodocrosite, specific gravity of..... 1189
Rhodonite, specific gravity of..... 1189
Rhyolites, weight of..... 1190
Ribbons, crushed by rolls..... 101
Richards-Coggin hydraulic classifier, details of in mills 388
or Calumet classifier.....391, 476, 478
Richards, J.....229, 886
R. H.,
223, 228, 295, 476, 640, 728, 787, 1174, 1176, 1183
shallow pocket hydraulic classifier..... 461
estimated capacities of with different sizes of sorting columns..... 466
sizing test of products of..... 466
tests of power required in crushing by rolls.. 311
tubular classifier 428
Rickard, on acid treatment of plates..... 763
connecting table with mortar..... 735
copper plates coated with amalgam..... 747
Muntz metal plates 750
position of plates in Australian mills..... 737
removal of sulphurets from mercury..... 770
slope of plates in Australian mills..... 745
sluice plates 740
temperature of battery water in Britannia United Mill, Ballarat 766
T. A..56, 142, 164, 165, 169, 172, 173, 181, 183, 214, 222—224, 226—228, 290, 728, 787, 788, 837, 1030, 1174—1176, 1180, 1181
Riddles 284
and vibrating grizzlies 341
comparison of..... 345
with trommels..... 365
Ries, Heinrich 325, 1183, 1186
Riffle bars in revolving strakes 725
blocks, timber 721
Riffles, action of..... 644
application of 723
bar 721
bibliography of..... 727
containing mercury 769,
advantages and disadvantages of..... 771
expanded metal 722
forms of 721
used in sluices 723
Howland 722
plain transverse 772
revolving strakes 725
Robinson 721
rock 721
timber riffle blocks 721
undercurrents 726
Right and left hand cams 196
Rings, details of, from mills..... 122
for amalgamating pans 244
stamps 128
Rinsing cylinder 835

Risdon Iron Works.....243, 244, 252
breaker 22
dies made by 245
estimate by, of power for 5-foot pans.... 249
Johnston concentrator made by..... 652
muller and shoes made by..... 246
shoe and die channels in amalgamating pan of 247
vanner made by 651
weight of spider and driving cone made by 247
Rittinger, cam and spring described by 537
data on jigs by..... 507
description of German sweeping table..... 702
duck tables 702
figures on clearance of plunger 530
hand jig 499
slope of jig sieves 548
formula for amount of throw of jigs..... 595
separation by centrifugal force..... 337
hydraulic classifier shown by..... 416
idea of jigging stated by..... 533
jigging pump 520
on capacity, etc., of jigs..... 597
coarsest size jigged..... 606
hand jigs 497
length and number of strokes in jigs..... 594
length of jig sieves..... 592
power for jigs..... 602
rectangular buddles 706
round concave buddles 706
slope of tables..... 667
width of jig sieves..... 591
parabolic formula of..... 471
pointed boxes 439
tables of sizes of 440
with ascending current..... 411
P. R. von..11, 56, 71, 87, 109, 214, 223, 291, 292, 295, 296, 299, 305, 313, 316, 329, 330, 334, 342, 384, 434, 476, 492, 520, 639, 728, 787, 832, 839, 884, 1038, 1059, 1086, 1104, 1174
round convex buddle 704
setsrad 478
sieve scale 365, 1138
skimming sieves 577
spitzkasten apparatus 439
principle of running deep pocket classifiers 409
spitzlutte 422, 477, 773
stay battery 229
table 667
compared with Wilfley 679
theory of advantage of jig over free settling. 625
work required for crushing 304
River pebble deposits of phosphate..... 295
Roasting for magnetism 813, 890
bibliography for 852
porosity 828, 890
iron ore 58
Robbins, A. C..... 1184
Robert, F 298, 641
P. R..... 1182
Roberts table 691
Robins Conveying Belt Company, tripper on belt conveyor made by 360
Robinson coal washer 478
jig 504
mine, stamp mill practice 221
riffle 721
Robins rubber belt conveyer..... 359
Thomas, Jr 884
Rochelt, F..... 493
Rocheux, double discharges at..... 584
Rock breakers 13
kinds of 13
method of operating 13
Emery Mill 253, 291
horizontal 255
vertical 255
Rocker or cradle 723
Rock house, hand picking in..... 482
riffles 721
Rocky Mountain Mill 1042
Rodda, J. T..... 228
Roebling 173, 1194, 1195
Roger 74
Rogers, A. N.....224, 226, 787
A. W..... 1174
rolls 110, 111
Rolker, C. M.....142, 476, 640, 728, 1109, 1174, 1182
on jigging with a stay box..... 551
Roller feeder 854
mill, Griffin 282
Huntington centrifugal 276
quartz mills, Bryan 271
used in California..... 231
shells, in Huntington mills..... 280
Rollers, in rubber belt conveyors..... 359
Rolls 62
alignment of 71
angle of nip 89
boxes or bearings for shafts of..... 72
bibliography for..... 109
capacity, or quantity crushed by..... 100
classification of 62
compared with stamps..... 214
corrugated 106
cost of crushing by..... 104
crushing ribbons of..... 101
diameter of 89
driving mechanism of 75
feeders for 71
frames of 62
general construction of..... 62
Roll shells, material for..... 68
methods of truing 70
or tires 66
table of 66
Rolls, hoppers 82
housing 82
journal friction in..... 96
periphery speed of..... 86
power for 97
principles and purpose 62
quality of crushing by..... 98
relation of speed to angle of nip..... 94
repairs on, for other than wearing parts..... 104
revolutions of..... 87
scrapers used on..... 75
shafts of 65
side adjustment of..... 71
space between 89
springs or weights used..... 73
table of data from the mills..... 64
journals for 72
value of forces acting at different angles.. 94
three-high 107
use of for brittle ores..... 314
velocity of approach in..... 314
width of face 82
with knobs 106
sluggers and knobs 104
Ropes, L. S..... 1183
Rope transmission 1094
Rosales, H.....224, 1176
Rosenlecher, R..... 1177
Rose, on retorts 783
Rose, T. K..56, 109, 142, 143, 207, 223, 290, 291, 294, 295, 297, 334, 476, 639, 787, 837, 1174
Ross, J., Jr..... 1184
Rothwell, John E.....111, 884
Rough, unplaned pine board surfaces used as plates 750
Round concave buddle 706
convex buddles 704
holes compared with slotted holes in screens... 169
Routine of managing heads and concaves on spindle breakers 47
Rowand magnetic separator..... 807
Royal breaker 53
Rubber belt conveyors..... 359
belts 1094
Rubidium, atomic weight of..... 1183
Rules for power for crushing..... 309
Rul, M 290, 295
Running cost, of spindle and jaw breakers..... 54
jigs, labor for..... 604
sample, definition of..... 843
stamps 206, 223, 224
Runs 447, 476
Ruthenium, atomic weight of..... 1183
Rutile, specific gravity of..... 1180
Rutter breaker 45
Ruttman, F. S.....57, 640, 1175
Ryerson pulverizer 296, 299

S

Sachs, C..... 1180
Safety devices, in stamps..... 127
Sahlin, A.....49, 57, 87, 100, 110, 253, 288, 291, 294, 297, 298, 335, 1180

Salzburg table 683
Samarium, atomic weight of 1188
Sample, dipper or bucket 845
grab 845
grinder 256, 292
pipe 845
Sampler, Brunton 847
cheese-scoop 844
Collom 847
pipe 845
Samplers 843
Sampler, Snyder 846
Vezin 846
Samples, moisture 846
Sampling 843
bibliography of 894
data from practice 849
hand 844
mechanical 846
principles of 849
Sampson mine, at St. Andreasburg, sieve scale at. 367
Sanborn, J. A. 789
on effect of temperature on amalgamation. 767
Sand concentrators 644
in launders, speed of water current necessary to carry 878
pumps for 868
pump, spiral 870
weight of 1190
wheels 864
details of 866
Sandstone, angle of nip required to crush 94
test on, at Watertown Arsenal 300
weight of 1190
Sandycroft standard cams 215
Sanna 342
Satelin, J. de 534
Saucon mine, power jig used at 506
Sauer-Meyer riddle 342
Sautter magnetic separator 798
Sauvage, E. 641
M. E 641
Saxon Mill, cleaning mercury traps in 774
removal of sulphurets from mercury in 770
shoe and die used in 181
Saxony, cobbing at mine in 480
Scaife 320
Scaife's improved trough washer 335
Scandium, atomic weight of 1188
Schaefer, J. V. 1178
Schamberger, J. W. 1186
Scheelite, specific gravity of 1189
Schellenbachs Sons 76
Schemes of mill treatment 892
Schemnitz, Hungary, U-shaped iron pipes used at. 424
Schiff, F. 835
Schleudermühle 236, 299
Schmidt, F. 728
Manderbach, A. 385
Schmidt spiral screen 363, 385
Schnabel, C. 281, 297, 839, 885, 1039, 1174
Schöne's tubular classifier 476
Schranz breaker ..... 31, 56—58, 60, 61
section of 32
jig 502
mill 235, 274, 292
bibliography for 296
products of, crushing Przibram ore 309
table 689
Schubersatz 214
Schulenberg, hand picking at 492
sieve scale at 367
size of ore hand picked at 487
Schulz, Dr. 479
W 297
Schurmann, W. R. 111
Schwarzmann's rolls 109, 110
Scrapers on rolls 75
Scraping conveyor 860
Screen frames in gravity stamps 176
Screening 1138
by trommels, system of 364
cost of 360
difficulties of 372
disintegrating followed by 830
trommel 235
wet 1138
Screen openings 167
plate, cost of 361
Screens, aluminum bronze cloth 174
Screens, aluminum plate 174
attachment of 355
bar 236
blinding of 373
brass cloth 174
canvas shield for 177
cloth 170
comparison of cloth with punched plate 171
copper plate 174
cost of 547
per ton of ore crushed 174
effect of acid water on 173
for stamps, table of details of 121
gravel 339
gyrating 342
in gravity stamps 167
size of holes in 210
Huntington mill's 281
iron cloth 173
plate 173
Screen sizes, value of meshes in 1196
sizing, principles of 385
Screens, life of 546
Linkenbach's figures on 547
material and cost of 173
material for 354, 384
jig 545
method of designating sizes of holes in 172
percentage of opening in 369, 546
with holes in 60° and 90° rows 169
phosphor bronze cloth 174
plate 174
placing of 170
plate 167
pulsating 342
relation of thickness of plates and wires to diameters of holes, in the mills 372
relation of thickness of plate to diameter of holes in punched screens, as quoted 372
revolving 346
round holes compared with slotted holes 169
shaking 341
shape and arrangement of holes in 369
sizes of needles for 172
sizing 336
sizing by 369
slope of 176
splash board 177
stationary 336
steel cloth 173
plate 173
table of clear punched slotted 169
testing 1127
the Schmidt spiral 363
thickness of the plate or wire 371
tin bronze plate 174
plate 173
trommel, life, cost, and details of 363
Tyler double crimped wire 370
unwatering 879
variations in the percentage of opening of, in the mills 371
wear of 358
with round holes laid out in equilateral triangles 168
squares 168
Screw conveyors 861
tappet 235
Sea water, weight of 1188
Sectional breakers, S. R. Krom's 21
cushioned crusher 30
Seemann, figures on tests on pumps 870
L. 478, 729, 885, 1182
Selenium, atomic weight of 1188
Self-tightening cams 183
Sellers, Wm., and Company 12
Sell, L. 286
Seminole mine ore, Krom jig results on 535
Separating, concentrating, or washing 333
minerals 5
Separation by centrifugal force 827
magnetic concentration 789
combinations of principles of 891
ease of 1117
in vanners, principle of 695
miscellaneous processes of 730
Separators, Buchanan magnetic 888
Clarkson-Stanfield centrifugal 829
Conkling dry magnetic 889
Dellvik-Gröndal 884

Separators, Edison magnetic 812
for fine materials 810
Ferraris magnetic 799
final 480
Heberli magnetic 799
wet 810
Hughes Daviot electro-magnet 813
Kessler magnetic 811
magnetic with conveying belts 804
Mumford and Moodie's 818
Pape-Henneberg 818
Payne magnetic 799
Rowand magnetic 807
Siemens magnetic 803
the Peck centrifugal 828
Wenström magnetic 800
Wetherill magnetic 804
with the ore falling in front of magnets 812
Serpentine, specific gravity of 1189
Setting up a stamp 200
Settlers 777
Settling beakers or jars 1146
fine slimes 1147
power of particles in air, water or other media 4
rates of, in different mediums 826
sorting by free 889
hindered 889
in air 889
tanks 450
baffle board 459
calculation of dimensions of 454
capacities of, 15 feet square 455
data from the mills concerning 458
practical limits of settling in 455
relations of length and width to the settling 452
to depth 453
speed of current to size of grain 452
width to depth 453
table of details of, in the mills 456
Setzpumpe Rittinger's 520
Severing minerals, methods of 2
or detaching minerals 5
Shafts and pulleys in jigs 532
boxes or bearings for 72
in jigs, diameters of 533
materials of 351
of crushing rolls 65
stamp 128
Shaft, the location of the main 197
Shaking plates 740
screens 341
tables 489
Shallow pocket hydraulic classifiers 389
the Richards 401
Shanks and butts of stamp shoes 181
Shape and arrangement of holes in screens 369
Sharpless, F. F. 121, 126, 142, 188, 227, 789, 1183
on effect of temperature on amalgamation 767
silver plated plates 750
Sharpneck steam stamp 136, 142
Shaw mine, capacity of Huntington mill in 281
Shells, roll 66
net cost of 69
table of 66
Sheppard pulsion jig 538
Shoe and die channels in amalgamating pans 246
of gravity stamps 181
shanks and butts 181
Shoes and dies, life of 184
of stamps, table of wear of 182
for stamps 120
method of renewing 201
of amalgamating pan 245
Sholl pneumatic stamp 141, 143
"Sickening" of mercury 751
Side adjustment of rolls 71
-bump tables, comparison with end-bump 682
with plane surfaces 667
Rittinger table 667
Stein, Corning, Bilharz and Luhrig 669
discharge in jigs 530
-jerk tables, comparison of Wilfley and Rittinger 679
with riffled surfaces 670
Bartlett table 673
Cammett table 676
Dodd table 675
Hallett table 675
Overstrom table 679
Wilfley table 670
Woodbury table 676
Siderite, angle of nip required to crush 94
specific gravity of 1189
Side-shake vanners 645
comparison with end-shake 655
Frue vanners 645
Johnston concentrator 652
Norbom concentrator 652
Tulloch concentrator 652
Sides of amalgamating pans 244
Siemens and Halske magnetic separator 798
magnetic separator 803
Sierra Buttes mill, plates in 748
Sieve compartments in a jig 588
frames, double iron 540
iron 539
wooden 538
Sieves 336
and plungers, sizes of, in mills 528, 529
Sieve scales 365, 384
in American mills 366
foreign mills 367
limits of 368
Sieves, drop between, in jigs 549
for three mineral separation 590
two mineral separation 589
Sieve, size of hole in 573
Sieves, length of in jigs 592
life of, in jigs 546
skimming, in jigs 576
slope of, in jigs 548
width of, in jigs 591
Sieve wires and prices 547
Silberau mill at Ems 1067, 1102, 1135, 1136
sieve scale at 367
Silica, crushed in Blue Bird Mill 222
Silicon, atomic weight of 1188
Siller and Dubois 293
Sills and girders for steam stamps, table of 118
Silver Age Mill 915
amalgams 731, 747
and lead ore, crushed by Blake breaker and Chili mill 271
apparatus used for amalgamation 731
assay for in Mill 55 304
in Mill 68 303
atomic weight of 1188
horn, crushed in Harshaw mill 207
Islet mill 226, 1179
Lake mill 1046
mines, Colorado 1092
lead ores, treated at Broken Hill, by Collom jigs 515
mills 1039
ore, amalgamation of 1167
crushed at Geddes and Bertrand mill 100
by arrastras 238
leaching 1167
treated in amalgamating pans 348
pan amalgamation for 1157
plated copper plates, coated with mercury 747
plates, comparison of, with plain copper 748
plates, coated with amalgam 750
plating 748
products of stamping 139
proportion of gold and silver on successive plates 763
in daily and hard amalgam 762
ratio of, to gold in plate amalgam 764
Reef mill 1174
specific gravity of 1189
Silverton Mining Company 1050
Silver treated in Mills 44, 46, 47, 48 486
wet and dry crushing 224
Simmer and Jack Mine, stamp mill practice in 231
Simonnet 1178
Single issue 167
Single-stage crushing 103
Siphon separator, at Mechernich 421, 475, 477, 478, 530
Site for mill 1065
Size and shape of mouth of spindle and jaw breakers 54
wearing parts of Dodge breakers 31
of Dodge breaker, table of 30
feed to hydraulic classifiers 389
rolls 63
stamps 207

GSI 1936

Size of grains of bottom bed in jigs 575
for film sizing 707
on slime tables 692
holes in screens 210
stamp screens, methods of designating. 172
needles for screens 172
ore hand picked in European mills (table). 487
in hand picking 486
sieve hole 572
sieves and plungers in mills 526, 529
stuff treated by pans 248
Sizer, Browne Hydrometric Conical 409
Sizing 884, 892
and assaying 1163
before sorting 891
box, the Dodge 416
by a water film on a surface 889
screens 889
followed by agitation 891
magnetism and by sorting 891
screens 236
bibliography for 884
testing 1170
tests, film, on quarts and galena 707
from Mill 78 667
graphical representation 1139
of different crushing machines 315
Dodge improved pulverizer 363
products from spindle breakers, table of 45
of crushing by Von Reytt 307
spindle and jaw breakers 53
trommel products 331
on Butte ore crushed by steam stamps 125
products of Richards' hydraulic classifier 406
Przibram ore 47
quarts and galena, results of 719
trommel 235
Skewes, E. 1182
Skidmore, W. A. 60, 143, 229
Skimming the sieves in jigs 576
Skinner, H. R. 884
Slate, weight of 1190
Sledges used in mills, table of 10
Sledging and spalling 480
definition of 480
hammers 56
Sliding block feeder 855
jig, construction of 525
mechanism 522, 534
Slime concentrator 644
the Geyer 460
jig 518
Slimer 884
Slimes, settling fine 1147
Slime tables 1154
circular, density of pulp 695
diameter of 696
kind of surface on 695
quantity of water on 694
shape of grains on 694
slope of the table 694
specific gravity of feed 693
speed of revolution of 696
thickness of film on 695
classification of slimes for 720
compared with belt film tables 693
conical, capacity of 697
construction and operation 684
fixed circular convex 689
Linkenbach fixed conical table 689
operation of circular 692
revolving circular concave 692
convex 686
size of grains on 692
slope of 719
testing 1172
velocity of water current 719
water films on 718
Slope of circular slime tables 694
concentrating plane in vanners 659
jig-hutches 522
sieves 548
plates 744
screens 176
table, for film sizing 707
vanners, table of, in degrees and inches. 1191
Slotted holes compared with round holes in screens 169
Sludge 901
Sluggers, rolls with 104
Sluice 723
plates 740
Sluices, Bowie's figures on sizes and carrying power of 723
undercurrent 726
Small steam stamp 126
Smaltite, specific gravity of 1189
Smith 1194
F. C 1176
Oberlin 223, 1174
R. G 1185
Smithsonite, specific gravity of 1189
"Smittem," definition of 901
Smuggler Mining Company 923
Union Mine 1176
Mining Company 1016
Smyth mine 223
Snyder, F. T. 181, 227, 723, 783, 884, 1123
gyratory vanner used by 657
on shaking plates 741
sampler 946
Sockets in bosses 157
Sodium amalgam 730, 732
atomic weight of 1186
Soft rock phosphate deposits 895
Sorting 891, 892
by free settling 889
hindered settling 889
settling in air 889
column in hydraulic classifiers 287
sizing before 891
tube investigation 465
computation of grain sizes 466
discussion of results of 467
results—fastest grains 466
slowest grains 466
specific gravities of minerals used for tests 465
South Clunes United Mill, distributors in 744
mercury wells in 768, 769
splash board in 177
Victoria, false bottoms in mill at 189
Spring Hill Mine, false bottom in 189
Southwest Missouri, clearance of plunger in blende jigs in 530
connecting rods in blende jigs in 530
shafts in Cooley jig in 532
Space between rolls and angle of nip 99
Spaced rolls, products of, crushing Przibram ore. 366
Spalling 480
capacity of man for 11
definition of 11, 480
hammers 11, 55, 56
Sparre, J. von 476, 639, 729
Spathic iron ore, separation at Allevard 9, 632
Special forms of rolls 104
Specific gravity, affecting momentum 4
settling power 4
definition of 3
of copper 3
feed of slime table 693
minerals and common metals 1188
to be jigged 693
ocean water 3
quartz 3
rock, effect of, on power used 313
test 1189
use of in dressing ores 3
Speed and height of drop, limits of, due to mortar 223
due to power 215
of revolution of circular slime tables 696
revolving tables in hand picking 486
rolls, relation of, to angle of nip 94
waves and thickness of films on amalgamated plates 765
Sperry 126, 128
E. A 787
E. W 142
figures on gold and silver in amalgam at the Cross mill 763
on slope of plates 745
trap in Cross mill 774
use of lye on plates 782
tool for loosening amalgam from plates, used by 768
Sphalerite, specific gravity of 1189

Spider and driving cone, weights of, in amalgamating pans 247
in amalgamating pans 247
Spiders for trommels 351
Spigots, diameters of in some mills 404
in hydraulic classifiers 388
jigs 527
Spilsbury, E. G. 60, 385, 388
Spindle and jaw breakers, table of products of .. 53
breakers, capacity of 52
comparison of kinds 46
with jaw 51
continuous action of 55
cost of 52
distribution of crushing in the mill 54
fine crushing in 54
friction 54
having greatest movement on smallest lump 36
heads and concaves on 47
mill data on 46
number used 51
power of 52
principle of action 52
running cost 54
size and shape of mouth 54
table of comparative tests of 45
cost of crushing by 50
details of 46
sizing tests of products from 45
wear for 46
taper 52
weight of 52
which have the greatest movement upon the largest lump 45
with equal movement on large and small lumps 45
or gyrating breakers 36
Spinel, specific gravity of 1189
Spiral sand pump 870
screen 384
the Schmidt 362
Spitzkasten apparatus, dimensions of in the Hars. 441
Rittinger's 439
Spitzsatte 476, 773
definition of 421
Meinecke 425
Rittinger's 422
Splash board for screens 177
plates 739
Split shovel 844
Spodumene, specific gravity of 1189
Spring and pneumatic stamps, bibliography for ... 142
Springs on Gates rolls 74
rolls of Colorado Iron Works 74
or weights 73
Spring stamps 141
Dunham's 141
the Ellenbecker 141
Sprocket and chain drive 1096
Square centimeter 1187
decimeter 1187
foot 1187
inch 1187
meter 1187
millimeter 1187
yard 1187
Squeezing amalgam 781
Stahl, A. W. 1174
Stamp battery, definition of 145
foundation of 145
mortar block of 145
Dunham's spring 141
frames 152
of iron 158
head 185
Husband 141
Krause's pneumatic 141
mill, bolts for holding down mortar in 150
California 144
milling 1030
mill practice in South Africa 221
mills, cross sills in 153
gravity, forms of frames for 156
guides in 155
guide timbers 155
mud sills for 152
platforms for 156
posts for 153
Stamp mills, sizing tests of products of, in Oro Plata and Utica Mines 309
Morison's high speed 141
Phoenix atmospheric 140
Stamps and mortars, table of weights of 164
capacity of 130
compared with rolls 314
details of steam cylinders, water used and capacity 126
die, ring, staves and shoes for 130
discharge 129
efficiency of steam and gravity compared 134
floors, bins, and feeding arrangements 128
foundation, mortar beds and sills and girders. 114
frame of 118
gravity 113, 144
Stamp, shaft, pulley and guides 128
shoes and dies 182
Sholl 141
Stamps, mortar and screens for 119
pneumatic and spring 113, 139
power and efficiency of 131
ring 120
safety devices 127
screen for 120
shaft, pulley and guides 128
shoes 130
small steam 126
staves 130
steam 113
clean up in 124
cost of crushing by 124
pneumatic and spring 113
sizing test on Butte ore crushed by 125
table of efficiency of 133
use of and quality of work of 124
table of details for screens 131
of valve action 127
foundations and mortar beds 118
sills and girders for 118
Stamp stems 187
table of details of 187
tapers of 187
Stamps, their principle, purpose, and classification. 113
velocity of fall in 815
weight of and effectiveness of blow 318
Stamp, the Allis 114
Ball 114
Cuyahoga 114
Fraser and Chalmers 114
Leavitt 114
Patterson Elephant 141
Union Iron Works 114
Standard Consolidated Mill, California, absorption of amalgam in 766
Mine 228
Mill 1183
Mining Company 947
Stanford, C. P. 228
Stapff, F. M. 642
Star Cañon, Nevada, products from Krom jig at. 824
of East Mill, method of neutralizing acid in .. 173
Starr, G. W. 1184
Stationary screens 336
tables, for hand picking 488
Staurolite, specific gravity of 1189
Stausatz 214
Staves, details of, from mills 123
for stamps 120
Stay battery 224
and overflow battery 214
boxes for automatic discharges 584
box, jigging with 551
Steam and gravity stamps compared, efficiency of. 134
cylinder, valve and valve motion 123
hammers 12
jacket and steam pipe for amalgamating pan .. 242
pneumatic and spring stamps 113
stamps 113, 224
bibliography for 142
cost of crushing by 124
principle of action 113
used for malleable minerals 214
uses of, and quality of work of 134
stamp, the Hammond 136
Sharpneck 136
Wood 136
Tremain 136
Stearns-Roger Manufacturing Company 87

Stedman's disintegrator 226, 234, 236
capacity of at Eagle, West Virginia..... 235
for clay 236
fertilizers 236
Steel cloth screens 173
log washer, McLanahan's 325
plate screens 173
specific gravity of..... 1189
Steep end-shake vanner 1165
Stefan, H..... 296
Stein tables 669
Stem Winder Mill 961
Stephanite, specific gravity of..... 1189
Stephen Lavagnino's arrastras 1039
Sterling Iron and Zinc Company..... 1060
Stetefeldt, C. A.....109—112, 224, 226, 229, 1167, 1174
Stewart's mill, wear of iron in pans in..... 249
Stibnite, specific gravity of..... 1189
Stickles Mill of the Utica Company..... 1034
Stilbite, specific gravity of..... 1189
Stiles pulverizer 228
W. C 228
Stirring arms, in trough washers..... 320
St. Joseph Lead Company.....924, 1175
St. Louis Smelting and Refining Company..... 1089
Stolberg, jig in Breinigerberg mine at..... 532
Stone, compressive strength of..... 300
strength of, before and after heating..... 302
parallel and perpendicular to bed.... 302
tests on, at Watertown Arsenal..... 300
Storing and shipping concentrates 1112
Storms, W. H.....729, 1178, 1181
Stowlinski, F. de..... 1180
Strength of cubes and prisms tested at Berlin.... 302
rock, effect of, on power used..... 313
stone 315
before and after heating, tested at Berlin 302
parallel and perpendicular to bedding planes 302
tests of at Watertown Arsenal..... 300
Stroke length of, in jigs..... 594
Strokes, number of, in jigs..... 592
Strontianite, specific gravity of..... 1189
Strontium, atomic weight of..... 1188
Structure and fracture, effect of in dressing ores. 3
St. Symphorien 1116
Stubs 172
Stuff treated by pans, table of size of..... 248
Stuhl, L..... 839
Sturm, F..... 839
Sturtevant breaker, diagram of..... 32
centrifugal rolls..... 74
Company 1099
mill 110, 111, 236, 286
bibliography for 298
Company 32, 253, 1137
details of 288
on dust bags..... 883
roll jaw breaker, advantages of..... 36
and fine crusher 32
data of sizes 33
Stutz 101
coal jig 523
cam and gravity used in..... 537
pulsion jig 538
S 109, 640, 884
Suckling's double discharge mortar 227
Suction 889, 891
author's tests on 627
final conclusions on..... 631
general principles 627
Hoppe's tests on..... 630
investigated in the mills..... 632
Suisse 837
Sulphur, atomic weight of 1188
Mines and Railroad Company.....900, 905, 1116
specific gravity of..... 1189
Summary of devices used on revolving convex tables 689
grizzlies and gravel screens..... 339
Summerhayes flange 647
Summit Mining and Smelting Company, work of Wilfley tables 674
Surface current box classifiers 433, 477
details of in the mills..... 442
method of investigating laws of free settling particles in..... 434
on slime tables, kind of..... 695
table of measurements of..... 1187
Surface tables 695
continuous 696
intermittent 700
Svarto, Sweden, magnetic separation at..... 815
Sweating 709
Sweeney, J. M..... 729
on bar riffles 721
Swinging plates 742
Syenite, weight of..... 1190
Sylvanite, specific gravity of..... 1189
System, continuous or Boss, of working amalgamating pans 242
intermittent or tank of working amalgamating pans 248
of screening, the Heberli 364
the Neuerberg 364
Systems of screening by trommels..... 364

T

Tables, bumping and jerking..... 667
end-bump 690
film-sizing 695
for supporting outside amalgamated plates.. 723
side-bump 667
Taft breaker 61
Tailboard in jigs, height of..... 550
Tail discharges in jigs 581
Tailings, definition of..... 494
disposal of 1113
removal of, in jigs 587
unwatering of 587
wheels 365
Talc, angle of nip required to crush..... 94
specific gravity of 1189
Tamarack classifier 397
details of in mills 397
Mining Company 1000, 1151
Tandem and concentric trommels 363
Tank system of working amalgamating pans..... 248
Tantalum, atomic weight of..... 1188
Taper of jaw and spindle breakers..... 52
stamp stems 157
Tappets 133
method of resetting 201
table of dimensions of..... 139
Tarnowitz, system of reservoirs at..... 479
Tatum, L. W..... 291
Taylor 1093, 1094, 1127
F. W..... 1176
hand breaker 59
Iron and Steel Company 66
Mine of the Idlewild Gold Mining Company. 1021
pipe sampler used by..... 945
Richard 235
W. W 294
Tays, E. A. H., comparison by, of stamps and Bryan mill 273
Teague, details of sieves 726
Tellurium, atomic weight of..... 1188
Temperature, effect of, on amalgamation..... 706
Template for cams 198
Templeton roller feeder 199, 854
Tenacity and brittleness, effect of in dressing ores. 2
Tenorite, specific gravity of..... 1189
Tephroite, specific gravity of..... 1189
Terbium, atomic weight of..... 1188
Terry, G..... 1174
Testing 1135
a classifier 1170
Frue vanner 1171
jig 1170
sizing screen 1170
Wilfley or other jerking table..... 1171
by heavy solutions 1136
oil 1135
for a process 1161
machines 1172
Testing of vanners 694
regular mill 1169
slime tables 1172
Tests of mill work 882
spindle breakers, table of..... 65
trommel products at Iron Mountain, Missouri 364
on Haverstraw sandstone at Watertown Arsenal 300
jigging mixed sizes 630
stone at Berlin 302
Munich 302

Tests on stone by G. A. Cutter..... 302
suction 627
small, compared with mill work..... 1168
Tetradymite, specific gravity of..... 1189
Tetrahedrite, specific gravity of..... 1189
Thallium, atomic weight of..... 1188
Thames Mill, wear of shoes and dies..... 183
Thayer 1137
Theoretical and actual crushing ribbons of rolls.. 101
Theory of flow in launders 376
Thetford, Quebec, air used in dressing asbestos at. 817
Thickness of bottom bed in jigs..... 575
film, on circular slime table 695
plate or wire 371
Thies, A..... 1175
Thiré, A.....224, 225
Thirion hydraulic classifier 475
Thomas breaker 57
Thomas, J..... 228
log washer 324, 335
R. A..... 1183
Thompson, experiments on magnet..... 794
H. N 838, 1178
S. P 832
Thompson's pulverizer 234, 294
Thorium, atomic weight of..... 1188
Thoulet, J.....477, 1176
results of experiments on kaolin and foraminiferae 474
Thoulet's solution 1156
Three-high rolls 107
mineral separation 590
Thullium, atomic weight of..... 1188
Thum's compound rolls 110
Tighteners for cam shafts 198
Tilly Foster magnetic plant 1175
mine 1135
results on Conkling wet magnetic separator 810
Timber riffle blocks 721
Tin, atomic weight of..... 1188
bronze plate screens 174
concentration works, roasting for porosity at. 829
dressing 1081
ore, Cornish, crushed by Husband stamp..... 141
crushed by Sturtevant mill..... 288
roasting of 56
runs in Cornwall on..... 478
separation of, at Altenberg..... 9
worked at Irish Creek, Virginia..... 288
plate screens 173
specific gravity of..... 1189
Tires, roll 66
Titanite, specific gravity of..... 1189
Titanium, atomic weight of..... 1188
Toldt, F..... 111
Ton 1187
Tonge, Thomas 1179
Ton, of water 1187
Tools and general methods of testing..... 1127
Topaz, specific gravity of..... 1189
Top layer, of jig products, definition of..... 495
Total dimensions, area and thickness of plates.. 744
Totten and Hogg 25
Tourmaline, specific gravity of..... 1189
Trachytes, weight of..... 1190
Trajectory 889
Transverse traps with gates 772, 773
Traps, box..... 773
mercury 768, 771
transverse with gates 772, 773
Trap, weight of 1190
Trautwine, figures on discharge from launders.. 377
J. C., Jr.....376, 404, 885, 1174, 1197
Travel of belt on vanner 659
slope and pulp water in vanners..... 660
Treatment of middlings..... 1121
plates 750
general considerations 750
Tregoning pulverizer 235, 297
Tremain steam stamp 136, 142
number of drops of..... 138
Tremnitz, Hungary, Huntington mill used at..... 282
Trent Chili mill 270
sizing tests of 271
Trenton Iron Company 178, 1194, 1195
Triple discharge, two-stamp mills..... 209
Trippel, A..... 838
Triumph concentrator 652
water used on..... 659
Trommels 346, 384
Trommels, action of..... 373
arrangement of 384
attachment of..... 355
capacity of 359
comparison of with riddles 365
cones, pyramids, prisms..... 361
construction of in mills..... 350
Trommel screens, cost of in mills..... 361
life, cost, and details of..... 352
Trommels, cylindrical 348
depth of bank and quality of work of..... 380
dimensions and adjustment of..... 349
operation of..... 347
driving mechanism for..... 356
effect of centrifugal force in..... 373
length and slope of on capacity..... 378
slope of, on capacity..... 377
speed, on capacity of..... 379
varying the diameter, on capacity..... 379
feeding of 357
power required for..... 357
rate of travel of ore in..... 374
ratio of diameter of hole in, to space between rolls 95
receiving cones for..... 358
sizing tests of products of in mills..... 381
spiders for 352
systems of screening by..... 364
tandem and concentric 362
tests of work of in mills..... 381
wash 55
wash water in..... 358
Trough classifiers, double 416
hydraulic classifiers 389
Troughs, jerking 861
plain transverse..... 773
Trough washers 319, 324
Truing roll shells 69
Trunking table in Mill 22..... 320
Tube mills, bibliography for..... 293
Tubular hydraulic classifier 421
classifier investigation 469
on fine grains 473
tests on hindered settling 610
results of..... 613
the Richards 428
Tulloch concentrators 652, 656
water used in 659
feeder 199, 354
for Tremain stamp mill 136
trommels 358
used in Bryan mills..... 272
Huntington mill 278
Tungsten, atomic weight of..... 1188
Turgite, specific gravity of..... 1189
Tustin mill, bibliography for..... 294
power needed for 311
sizing tests of products of, in Ore Plata, and Utica mines..... 309
used in California 231
Wagoner's tests of products of..... 310
Tustin's rotating pulverizing mill.....232, 262, 316
Tuttle, E. G. 640
Manufacturing and Supply Company..... 76
three-deck table made by..... 657
Tutty, E. J., on capacity of jigs..... 602
Twelve Apostles mill, bullion in squeezed amalgam in..... 782
effect of temperature on amalgamation.. 767
Two-mineral separation, sieves for, in jigs..... 589
-stamp mills 209
Tye 707
Tyler double crimped brass battery cloth..... 171
steel or iron battery cloth..... 171
wire screens 370
Wire Works Company.....178, 1194

U

Ulzer, F. 676
Undercurrents, in sluices 736
Under-piston jigs 530
Unfinished grains 318
Union Iron Works....72, 111, 150, 153, 158, 195, 196, 228, 243-245, 337, 1184
breaker 21
dies made by..... 245
estimate by, of power for 5-foot pans.... 249
Frue vanner made by..... 651
muller and shoes made by..... 246

Union Iron Works, on feed of vanners..... 658
shoe and die channels in amalgamating pans of..... 247
stamp 114, 117
details of cylinder, water used, and capacity 126
dies 122
shaft 128
staves in 123
valve action 127
frame of 119
mortar housing for..... 119
safety devices in..... 127
table of foundations and mortar beds.. 118
sills and girders..... 118
valves and valve motion..... 126
vanners used by..... 655
weight of spider and driving cone made by. 247
Union Mill of the Standard Mining Company..... 974
Unwaterers and driers..... 879
Unwatering boxes 450, 588
table of details of in mills..... 451
mechanical 879
screens 879
sieves, discharges with..... 586
tailings 587
Unwin, W. C.....1095, 1174
Uranium, atomic weight of..... 1188
Uren table 698
Uses and method of working of amalgamating pans 248
Uses for which steam stamps are adapted, and quality of their work..... 134
Uses of supplementary principles..... 5
water in breakers..... 49
trommels 358
Ute and Ulay mill..... 935
Utica Company 1024, 1033, 1034
Mill of the Utica Company..... 1033
mills 224, 1176
mine, sizing tests on ore from..... 309
-Stickles Canvas Plant..... 1038
Utsch jig 519

V

Valentinite, specific gravity of..... 1189
Vale, W. H.....224, 788
Value of the ore..... 1117
Valve action, table of details of..... 127
and valve motion..... 122
Vanadium, atomic weight of..... 1188
Vanners 644
action of 644
agitation ratio 665
bed of pulp on belt in..... 660
bibliography for 727
capacity of 662
comparison of side- and end-shake..... 655
with convex slime tables..... 691
cost of repairs in 663
Ellis concentrator 657
Embrey concentrator 653
end-shake 652, 1153
Frue 645, 1153
gyrating 657
Johnston concentrator 652
kinds of 645
made by Gates Iron Works..... 651
Risdon Iron Works..... 651
Union Iron Works..... 651
modifications of Frue..... 651
Norbom concentrator 652
operation of 657
power for 663
principle of separation 665
quality of feed 658
quantities of water in..... 659
side-shake 645
slope of concentrating plane..... 659
in degrees and inches..... 1191
steep end-shake 1165
table of adjustment, feed and capacity..... 648
testing 664
travel of belt in..... 659
travel, slope and pulp water..... 660
Triumph concentrator 652
Tulloch concentrator 652, 656
vibrations in 658
Vanners, Woodbury 654
Vanning plaque 1152
Vapart disintegrator 236, 289, 891
at Lintorf, Prussia..... 830
bibliography for 290
Varney pan 291
Vats for silver plating 755
Vaucron mill, classifier used at..... 416
hydraulic classifier at..... 416
length and number of strokes in jigs at..... 594
pointed boxes used at..... 477
sieve scale at..... 367
three-mineral separation in..... 590
Velocity of approach in rolls..... 314
fall in stamps 315
stamps, analysis of Morison's curves of..... 215
water in launders..... 377
Ventilation and dust prevention..... 1089
Verdigris on plates.....750, 762
Vermillion hematite, action of Monarch breaker on 21
Vertical and horizontal shafts of amalgamating pans 248
mills 255
Vezin, figures on clearance of plunger in jigs.... 530
H. A.....71, 80, 84, 96, 313, 316, 642, 884, 1094, 1099, 1139, 1150, 1179, 1190
on length and number of strokes in jigs..... 594
rules for sampling 850
sampler 846
Vibrating grizzlies 341, 345
Vibrations in vanners 658
Vibromotor screen 385
Victoria mill 1052
New Zealand 1191
Vieille Montagne Company.....9, 911, 1116
roasting for porosity in works of..... 829
Mill 906
Villefort, France, Castelnau table used at..... 700
Virginia mill, California, effect of temperature on amalgamation in 767
Vivianite, specific gravity of..... 1189
Vogt, G. 1185, 1186
Volume, table of measurements of..... 1187
Von Dessauer, H. A..... 789
on effect of temperature on amalgamation. 767
Von Hauer, J..... 838
Von Reytt, K.....47, 98, 308, 316, 1106, 1107
power and surface measurements, table of results of 305
tests on Przibram ore..... 305

W

Wad, specific gravity of..... 1189
Wagemann, C. 1177
Wagoner, L. 262, 294, 310, 316, 477, 478
parabolic formula of..... 472
sizing test by of pulp from Tustin's mill..... 264
theory of power required in crushing..... 310
Walburn and Swensen..... 23
breaker 23
Company 76, 77
Waldeyer, on hydraulic mining..... 721
Walker pulverizer.....236, 290
Walkers' stamp 327
Wall's finger gear rolls..... 111
Waltl, V. 386, 478
Wappler, A. F..... 391
Ward, W. P.....478, 643
Waring Pulverator 234
bibliography for 294
Wascott 229
Washburn and Moen.....171, 173, 1194-1196
Washers, log 55, 330
preliminary 319
trough 319
Washing pan for corundum..... 335
diamondiferous earth 335
pans 333, 334
pits 335
preliminary, bibliography for..... 334
Washoe process of amalgamation.....[illegible], 1039
Wash trommels .....55, [illegible]
Bradford 330
Carnall 334
compared with log washers..... 333
Crickboom 330, 334
cylindrical, used at Cabarceno, Spain..... 330
for disintegrating clay..... 335

Wash trommels for washing the ore in a running stream of water..... 232
with ore immersed in water..... 229
water in the trommel..... 358
Water, acid, effect of on screens..... 173
current in launders, speed necessary to carry sand..... 878
hydraulic, in jigs..... 598
in gravity stamps, amount and temperature of 221
launders, mean velocities of..... 877
mills..... 1102
pipes in gravity stamps..... 198
power in mills..... 1069
pumps for..... 868
quantities of, in rectangular launders..... 878
quantity for film sizing..... 707
on circular slime tables..... 694
regulators..... 858
Waters, Theodore..... 1183
Water supply, pumps for..... 871
table of weights and measurements of..... 1187
Watertown Arsenal tests on stone.....300, 316
Water, used in breakers..... 49
steam stamps.....126, 129
Waverly mill..... 228
Wear and losses of iron in amalgamating pans 249
for Blake breakers, table of..... 26
Forster breaker in Mill 67..... 28
spindle breakers, table of..... 46
of Blake breakers..... 25
parts in Mill 26, table of..... 47
screens..... 356
stamp shoes and dies..... 183
Weathering..... 230
diamonds at Kimberley..... 230
garnets at Meroniits..... 231
Webb and Yeatman, estimate on hand picking.. 482
Webber, on centrifugal pumps..... 868
W. O..... 235
Webb, H. H.....225, 492
Wedding, H.....832, 835-837, 1117
Weighing and measuring..... 1160
ore..... 883
Weight of broken ore..... 1190
jaw and spindle breakers..... 52
stamps and effectiveness of blow, in gravity stamps..... 218
Weights..... 72
and measures, equivalents of..... 1187
of parts of a stamp, proportions between..... 189
of spider and driving cone in amalgamating pans..... 247
of stamps and mortars, table of..... 164
Weight, speed and height of drop of stamps..... 222
table of measurements of..... 1187
Weisbach, P. J.....229, 1174
Weiss mill, sieve scale at..... 267
size of ore hand picked at..... 487
Welkenraedt, double discharges at..... 584
Wells, mercury..... 762
Wendt, A. F.....640, 1174
jig, connecting rods of plunger in..... 530
construction of..... 524
elliptical gear of..... 536
Wengler and Lowe's classifier..... 412
pointed boxes..... 478
Wenstrom magnetic separator..... 800
products of..... 802
Wentworth Gold Fields Company.....181, 227, 1181
shoe and die used in mill of..... 181
Wessinger, H. J..... 60
Western Wheeled Scraper Company, breaker..... 25
West Rand, cyanide plant in..... 478
Waverly Gold Mining Company..... 1026
Wetherill horizontal separator, in Mill 92..... 806
inclined magnetic separator in Mill 92..... 807
J. P.....835, 1181
figures on cost of screening..... 361
magnetic concentrating plant.....1054, 1060, 1061
separators.....804, 891, 1156
results of tests of..... 808
parallel separator, in Mill 92..... 805
Wethey, A. H.....271, 729, 1115
Wet magnetic separator, Conkling..... 810
screening..... 1138
silver mill..... 1039
W. F. Mosser and Company..... 76
Wheel agitator..... 780
Wheeler, H. A., tests of trommel products at Iron Mountain..... 333
Wheeler pan..... 291
Zenas..... 188
Wheels, sand..... 864
Whelpley and Storer pulverizer.....236, 289, 299
whirling table..... 236
White, F..... 316
Whitehead, Cabell..... 1148, 1176
White, T..... 234
Whole bed, of jig products..... 495
current box classifiers..... 443
labyrinths and runs..... 447
table of details of..... 444
means of getting, in settling tanks..... 451
Width of face or width of rolls..... 83
jig sieves..... 591
Wild..... 72
Wildman Gold Mining Company..... 1023
stamp mill..... 1184
Wiley, H. W..... 1174
Willey table..... 670
compared with Rittinger..... 679
raff wheels on..... 864
riffles on..... 721
testing..... 1171
tests of, at Parrot mill..... 675
Wilkens, H. A. J.....224, 787, 833
Wilkes, J. A..... 1178
Willamite, specific gravity of..... 1189
Williams, Albert, Jr.....459, 476
William Sellers and Company..... 13
Williams, J..... 477
Wills, J. L..... 294
Wilson, E. B..... 227
steam stamp.....142, 143
Wiltsee, E. A..... 290
Windsor cyanide plant in the West Rand..... 478
Wings, muller, shoes, and pulp current in amalgamating pans..... 245
Winslow, W. H..... 299
Winter, George W..... 839
Wire cloth screens..... 335
cost of..... 361
for medium and fine work..... 340
Tyler double crimped..... 370
gauges..... 1194
Wisconsin Lead and Zinc Company, roasting for porosity at works of..... 839
Wiswell Electric Ore Pulverizer.....235, 296
Witherbee, Sherman and Company..... 1059
Mill.....1053, 1054, 1117
products of Wenstrom separator at 802
Witherite, specific gravity of..... 1189
Witter..... 836
Woakes, E. R.....788, 789
E. R., on cleaning plates..... 759
Wolff, D. D..... 838
Wolframite, specific gravity of..... 1189
Wolf's jaw breaker.....56, 58
Wolhuter Mine, stamp mill practice in..... 221
Wolverine mine..... 1131
Mining Company..... 1131
Woodbury belt..... 647
end-shake vanners, water used on..... 659
tables..... 676
vanners..... 654
distributor in..... 358
Wood's mill.....296, 235
Wood steam stamp..... 136
Woodward, A. E..... 476
Work for crushing, computation of..... 312
of steam stamps, quality of..... 134
required for crushing..... 304
to crush different sizes of Pribram ore.. 308
Your Own Diggings Mill..... 1021
Wrought iron, specific gravity of..... 1189
W. S. Tyler Company.....354, 355, 370, 1138, 1196
figures on cost of screens..... 548
Wulfenite, specific gravity of..... 1189
Wunderlich coal washer..... 477
trough classifier..... 478
W. Y. O. D. mill..... 1021
Wythe Lead and Zinc Company, tests on zinc ore with Wetherill magnetic separator..... 809
Wythe Lead and Zinc Mine Company..... 1065

X

Xenon, atomic weight of..... 1183

Y

Yale, C. G.....229, 291, 294, 789
Yeatman hydraulic classifier.....399, 477
Yope 225, 492, 1168
Ytterbium, atomic weight of..... 1183
Yttrium, atomic weight of..... 1183

Z

Zaratite, specific gravity of..... 1189
Zelle Mining Company..... 1034
Zeuner 479
Zinc 900
atomic weight of..... 1183
Zincite, specific gravity of..... 1189
Zinc, specific gravity of 1189
Zirconium, atomic weight of..... 1183
Zircon, specific gravity of..... 1189
Zirkler, H.....109, 223, 725, 1174